Flood Plain Mapping Study

Fenelon Falls South Tributary

Technical Appendices

November 2023

KAWARTHA CONSERVATION

Kawartha Lakes

Jump In

Table of Contents

Appendix A: Previous Report Excerpts
Appendix B: Study Terms of Reference
Appendix C: Rainfall Data
Appendix D: Subcatchment Map
Appendix E: Hydrology Parameters Calculations
Appendix F: VisualOTTHYMO Outputs
Appendix G: Hydrology Flow Summary
Appendix H: Hydrology Model Sensitivity Analysis
Appendix I: Structure Photo Inventory Record
Appendix J: HEC-RAS Output
Appendix K: Model Files
Appendix L: Peer Review Correspondence
Appendix M: Digital Elevation and Orthoimagery Quality Check

Appendix A
Previous Report Excerpts

VALDOR ENGINEERING INC.
Consulting Engineers - Project Managers

661 Cranlea Road, Suite 11
Woodbridge, Ontario L4L 5A3
TEL (905) 264-0854
FAX (905) 264-0863
info@valdor-engineering.com
www.valdor-engineering.com

Fenelon Falls Drainage Study (Basin DD) and Traffic Impact Study

Proposed Arena and Community Centre and Other Identified Developments

City of Kawartha Lakes
P.O. Box 9000
12 Peel Street
Lindsay, Ontario, K9V 5R8

November 2009
Revised February 2010

Prepared By:

Valdor Engineering Inc.
in association with Greck and Associates Limited and Mark Engineering

Prepared For:

The City of Kawartha Lakes

File: 09123

s:\pro_ects\2009\09123\reports\final report - feb 2010\final drainage study report\09123 final drainage study report feb 2010.doc

Professional Engineers
Ontario

Authorized by the Association of Professional Engineers of Ontario to offer professional engineering services.

TABLE OF CONTENTS

Executive Summary 3
1.0 INTRODUCTION 7
1.1 Site Area and Location 7
1.2 Problem Identification and Purpose of Study 7
1.3 Study Scope 7
1.4 Traffic Study 8
1.5 Municipal Class Environmental Assessment 8
2.0 EVALUATION OF EXISTING CONDITIONS 9
2.1 Previous Studies 9
2.2 Existing Drainage Patterns and Flow Analysis 9
2.2.1 Field Inspections and Drainage Surveys 9
2.2.2 Internal Drainage – Basin DD 10
2.2.3 External Drainage and Flow Split Analysis 10
2.2.4 Existing Drainage Outlet 10
2.3 Capacity Analysis for Existing Storm Sewer System – Helen Street 11
2.3.1 Methodology 11
2.3.2 Results 11
2.4 Hydraulic Analysis to Determine Existing Limits of Probable Flooding 11
2.4.1 Methodology 11
2.4.2 Results 12
2.5 Natural, Social and Economic Environment 12
3.0 DRAINAGE OPTIONS TO ACCOMMODATE PROPOSED FUTURE DEVELOPMENT 13
3.1 Proposed Future Developments 13
3.2 Stormwater Management Criteria 13
3.2.1 Quality Control 13
3.2.2 Erosion Control 13
3.2.3 Quantity Control 13
3.3 List of Initial Stormwater Management and Storm Drainage Outlet Options 13
3.4 Evaluation of Drainage Outlet Options 15
3.4.1 Evaluation Criteria 15
3.4.2 Preliminary Cost Estimate for Ranking Purposes 16
3.4.3 Evaluation Procedure 17
3.4.4 Results of the Evaluation 17
3.5 Impacts of the Preferred Drainage Outlet to the Environment 18
4.0 CONCEPTUAL DESIGN FOR THE PREFERRED DRAINAGE OPTION 19
4.1 Additional Refinement of the Preferred Option Prior to Conceptual Design 19
4.2 Conceptual Design Details 22
4.3 Preliminary Construction Cost Estimate 23
4.4 Recommendations Prior to Detailed Design 23
5.0 COST SHARING AND IMPLEMENTATION STRATEGY FOR THE PREFERRED OPTION 24
5.1 Cost Sharing Strategy 24
5.1.1 Cost Sharing Agreement 24
5.1.2 Special Area Development Charges 24
5.1.3 Cost Sharing Analysis 24
5.2 Implementation Strategy 25
6.0 TRAFFIC IMPACT STUDY 27
7.0 SUMMARY AND RECOMMENDATIONS 28
8.0 REFERENCES 31

LIST OF APPENDICES

Appendix A	Site Survey, Field Inspections and Supporting Documentation
Appendix B	Supporting Hydrology and Hydraulic Calculations
Appendix C	Hydrology and Hydraulic Model Output
Appendix D	Preliminary Construction Cost Calculations for Drainage Outlet Options
Appendix E	Traffic Impact Study (Marx Engineering)

LIST OF FIGURES

Figure 1	Study Area Location Plan	Follows Text
Figure 2	Existing Drainage Plan	Follows Text
Figure 3	Probable Flood Limits	Follows Text
Figure 4	Proposed Development Areas	Follows Text
Figure 5	Drainage Outlet Options 1, 2 and 3	Follows Text
Figure 6	Drainage Outlet Options 4, 5 and 6	Follows Text
Figure 7	Drainage Outlet Options 6A, 6B and 6C	Follows Text
Figure 8	Drainage Outlet Options 6D, 6E and 6F	Follows Text
Figure 9	Preferred Drainage Outlet Option	Follows Text
Figure 10	Preferred Intersection Option – Arena Access	Follows Text

LIST OF TABLES

Table 1	Evaluation and Ranking Summary – Initial Options	Follows Text
Table 2	Evaluation and Ranking Summary – Refined Options	Follows Text
Table 3	Refined Drainage Options – Pros/Cons and Costs	Follows Text
Table 4	Cost Sharing Analysis for the Preferred Drainage Alternative	Follows Text

Executive Summary

DRAINAGE STUDY (BASIN DD)

Introduction

Valdor Engineering Inc. in association with Greck and Associates Limited and Mark Engineering was retained by the City of Kawartha Lakes to prepare a drainage and traffic study and to make recommendations for a drainage outlet and traffic improvements for the proposed new arena and community centre as well as other development considerations located in the Village of Fenelon Falls (Basin DD). The purpose of the study was to prepare a conceptual drainage outlet design and traffic study to accommodate the identified future development areas without worsening the existing flooding problems and to minimize traffic impacts within Basin DD.

Evaluation of Existing Conditions

The existing conditions within Basin DD were examined and evaluated. Based on discussions with the City and the Conservation Authority, there are no significant environmental features (regulated wetlands, fisheries, defined valley lands) in Basin DD, however, the water course is regulated and development within the regulated area must first be approved by the Conservation Authority. A flow capacity analysis was completed for the existing storm sewer on Helen Street to assess drainage design options. It was determined that the capacity of the Helen Street storm sewer is limited and cannot accommodate any additional flow. A hydraulic study was also completed to determine the estimated extent of the existing flood plain within Basin DD. The hydraulic study confirmed the location of reported existing flood prone areas and mapped the extent of probable flooding for the 100-yr and Timmins storm. A flow split was identified and defined adjacent the existing Canadian Tire site near Lindsay Street that divides flow between Basin DD and the watercourse downstream of the culvert under Lindsay Street. As a result of the existing drainage issues within Basin DD, a drainage outlet option is required for planned future development that does not exacerbate the existing flooding problems and that preferably assists in mitigating the existing flooding issues to the greatest practical extent

Drainage Options to Accommodate Proposed Future Development

The identified proposed future development areas considered in preparing a list of drainage outlet options were the arena and community centre, the Sugarbush Villas development and the Wright development. Based on the review (including discussions with the public at the PIC) and the evaluation of a number of drainage outlet options, the preferred alternative was determined to be a new dedicated drainage outlet using a storm sewer to be constructed along North Street and down Helen Street to adjacent the existing outlet at the Fenelon River below the falls near Lindsay Street. It was determined that the impact of the preferred design alternative on the environment would be minimal and that it would result in social and economic benefits for the community by enabling the development of the new arena and community centre with consideration as well for other identified proposed future development.

Conceptual Design for the Preferred Drainage Option

Initially, 7 drainage options were identified and presented at the PIC. Based on feedback from the public and subsequent discussions with the City, an additional number of options were identified – all variations of Option 6 whereby the outlet is located on North Street. This was completed in order to evaluate a variety of flow control and storm sewer options to minimize constructions costs. Based on this additional analysis and evaluation, the conceptual design for the preferred alternative

was selected – Option 6B. The conceptual design for the preferred option was prepared along with recommendations for water quality and erosion control and allocated unit flow quantity release targets to ensure that the capacity of the proposed drainage outlet is not exceeded. Based on preliminary cost calculations, the estimated total cost for the preferred option is $1,416,630, of which $249,600 is associated with the proposed road improvements to North Street. Recommendations prior to detailed design were also provided.

Cost Sharing and Implementation Strategy for the Preferred Option

Based on a preliminary cost analysis, it is less costly for the owners of the three identified proposed developments to share in the cost of a new common drainage outlet than for each of the developers to proceed independently assuming a drainage outlet to North Street. It is recommended, therefore, that cost sharing opportunities should be pursued. Cost sharing can be achieved either with a cost sharing agreement or by implementing special area development charges. Based on a cost sharing analysis and an estimated preliminary cost of $1,167,030 (assuming partial road repair only), the total calculated cost share allocation for the City is $291,758 (City's share for outlet) + $116,703 (cost to upsize outlet to capture runoff associated with North St. road improvements) + $249,600 (cost of North St. road improvements) = $658,061. The ultimate cost share quantities may be further refined subject to further negotiations should the City pursue discussions with the other identified developers and prepare a cost sharing agreement. This cost estimate is considerably less than the estimated cost of $1,093,807 required to provide an outlet to North Street for the arena and community centre alone. An implementation strategy is provided to assist with the next stages in the process to complete construction of the proposed drainage outlet.

Summary and Recommendations

Option 6B (shared outlet to North Street) was identified as the preferred drainage outlet alternative based on the established selection criteria and evaluation and should be considered for implementation by the City. It is recommended that the City pursue cost sharing opportunities with the identified developers either through a cost sharing agreement or area specific development charges. The ultimate cost share quantities may be further refined subject to further negotiations should the City pursue discussions with the other identified developers and prepare a cost sharing agreement.

TRAFFIC IMPACT STUDY

Introduction

The purpose of the traffic impact study for the proposed development is to:

- identify the additional traffic generated by the proposed development and other developments in the area,
- determine the impacts of this traffic on the surrounding road system, and
- identify any changes to the surrounding road system required to support the development.

The study area is generally bounded by the west limits of the fairgrounds, Helen Street, Francis Street on the north, Lindsay Street on the east and West Street on the south. The horizon years were 2010, 2015 and 2020.

Existing Conditions

The key roads are Lindsay Street/Colborne Street from West Street in the south to Francis Street on the north, Helen Street from Oriole Road on the west to Lindsay Street/Colborne Street, North

Street and Veterans Way. The key intersections analyzed were Colborne Street & Francis Street, Colborne Street & Water Street/Oak Street, Colborne Street/Lindsay Street & Helen Street, Lindsay Street & Veterans Way, Helen Street & North Street, Helen Street & Oriole Road and North Street & Veterans Way. There is a mix of land uses surrounding the proposed development. The arena and community centre will be built on the fair ground site.

Proposed Development

The arena is proposed to contain 400 seats. It will typically be used for sporting events. The parking requirements, based on an average of 3 persons per vehicle, would be in the order of 135 spaces. However, it could also be used for a major event, such as a rock concert. The community centre will have a capacity of 300 people. The parking requirement would be in the order of 100 spaces. Access to the complex would be via the existing access to the North Street & Veterans Way intersection. The proposed townhouse development in the east quadrant of the North Street & Veterans Way intersection will have 12 units. The Wright property is proposed to contain a residential portion (R4) that could contain 150 units and a commercial portion (C1) that could up to 40,455 ft² of retail space.

Traffic Forecasts

Historical traffic volumes for Highway 35 between the Cambray Road and Powles Corners were used to determine annual growth rates used to forecast the 2010, 2015 and 2020 background traffic in the study area. Two sets of trip generations were produced for the arena. The first was for a typical sporting event and the second for a major event such as a concert. The community centre trip generation was derived in a similar manner as for an arena. It was also assumed that the arena and community events would occur at the same time. This produces the worst case scenario. The total development traffic assignments were combined with the future background traffic forecasts to produce the 2010, 2015 and 2020 total peak hour traffic forecasts.

Traffic Analysis

The analysis of the intersections indicated that most of them would operate at an acceptable level of service (with minor modifications) except for the Lindsay Street/Veterans Way and North Street/ Veterans Way intersections.

Lindsay Street & Veterans Way Intersection

The results indicate that traffic operations are very good except when there is a major event at the arena, the demands will greatly exceed the capacity of the intersection. There are two solutions to this. Firstly, police could control the intersection during the peak periods so that drivers can enter and leave the intersection. Given that there will be a limited number of major events; this could be a viable solution. The second option would be to install fully-actuated traffic control signals. If this were done, the overall operations of the intersection would be significantly better.

North Street & Veterans Way Intersection

This intersection is actually a bend in the road with a driveway to the west that is the access to the fair grounds. The three legs form a "Y" shape. There is a private right-of-way immediately south of the fair ground property that is 20+ meters wide that could become a public road in the future when development is proposed to the south and southwest of the fair grounds. The intersection has to be configured such that it currently serves the fair ground access and will serve a public road in the private right-of-way when it ever becomes a public thoroughfare. Three configurations were examined.

Single Stop Controlled

This configuration is essentially the current situation, where the North Street/Veterans Way roadway is the through road and the fair grounds access is stop controlled. The analysis of this configuration indicates that the intersection will operate well, except for the eastbound movement out of the access, which will experience some delays.

All-Way Stop

Installing stop signs on all approaches is another solution. The analysis indicates that the intersection will provide a good level of service.

Roundabout

A small roundabout would create a situation where no movement would have to stop unnecessarily. At peak periods, vehicles entering the roundabout would have to slow down and yield to vehicles already in the roundabout, but they would not have to stop, which would minimize the overall delays. The analysis indicates that the intersection will provide a very good level of service.

Comparisons of Control Configurations

The comparison of the operations of the three alternatives indicates that the roundabout will experience much lower total delays than the two stop control configurations. A similar relationship exists for volume/capacity ratios. Therefore, a small roundabout would provide the best overall operations for this intersection. The cost of a roundabout would be in the $60,000 range.

Other Improvements

There have questions raised regarding the need for the unopened West Street right-of-way between Lindsay Street and North Street, since if it is not needed, the Legion would like to have access to the lands to provide for additional parking. The above analysis indicates that the right-of-way is not needed to provide additional road capacity in the area. There may be a need to retain the right-of-way if there are underground services in the right-of-way.

Recommendations

The recommendations drawn from the above are:

1. The two eastbound lanes at the Colborne Street & Francis Street should be converted to a combined left turn and through lane and a right turn only lane.
2. Advanced green phases should be implemented for the eastbound-to-northbound left turns and for the southbound-to-eastbound left turns at Colborne Street/Lindsay Street & Helen Street intersection.
3. The installation of fully-actuated traffic control signals at the Lindsay Street & Veterans Way intersection should be considered.
4. The North Street/Veterans Way & fair grounds access intersection should be reconstructed as a roundabout as part of the improvements associated with the construction of the arena and community centre.

1.0 INTRODUCTION

Valdor Engineering Inc. in association with Greck and Associates Limited and Mark Engineering was retained by the City of Kawartha Lakes to prepare a drainage and traffic study and to make recommendations for a drainage outlet and traffic improvements for the proposed new arena and community centre located in the Village of Fenelon Falls (Basin DD). In addition, two other identified proposed developments were included in the study in reviewing and evaluating drainage outlet and traffic improvement options - Sugarbush Villas and the Wright development. The study was completed following the Municipal Class Environmental Assessment Planning and Design Process.

1.1 Site Area and Location

The study area is located in the Village of Fenelon Falls in the City of Kawartha Lakes and is defined by the drainage area delineation refered to as Basin DD. A study area location plan is provided on **Figure 1**. The approximate limits of Basin DD include Lindsay Street to the east, Helen Street to the north, and the west limits of the fairgrounds to the west. Basin DD is approximately 16.3 ha in size and drains in a northeast direction toward the Fenelon River. The existing land use within Basin DD consists of a mix of residential, commercial and industrial. The fairgrounds are also located within Basin DD. A large external drainage area is located to the southwest of Basin DD and is approximately 69.2 ha in size. The external drainage area is largely undeveloped and consists primarily of agricultural and forest lands.

1.2 Problem Identification and Purpose of Study

There are areas within Basin DD that are currently prone to flooding. Factors contributing to the existing drainage problem in Basin DD include the limited capacity of the Helen Street storm sewer (which serves as the current drainage outlet) and the poorly defined overland flow route that provides inadequate conveyance during large rainfall or snowmelt events. The City has identified a need to accommodate new development applications including the scheduled construction of a new arena and community centre without worsening the existing flooding problem. Based on preliminary discussions with Kawartha Conservation, there are no significant environmental features (regulated wetlands, fisheries, defined valley lands) in Basin DD, however, the water course is regulated and development within the regulated area must first be approved by the Conservation Authority. Based on the problem identified above, the purpose of this study is to provide alternative drainage outlet solutions to the problem and to complete a conceptual design for the preferred option. Issues and solutions associated with increased traffic volumes and altered traffic patterns associated with the proposed development are also considered.

1.3 Study Scope

The scope of this study is limited to the following components:

- Background review of available relevant studies and reports provided by the City;
- Traffic study to accommodate the identified proposed development;
- Field inspections and survey to confirm general drainage patterns and details associated with the Helen Street storm sewer;

- Capacity analysis of the existing storm sewer on Helen Street;
- Hydraulic analysis to determine the existing limits of probable flooding within Basin DD;
- Identification and evaluation of various options to provide a suitable drainage outlet and traffic improvements for the identified proposed development and selection of the preferred alternative;
- Conceptual design for the preferred option; and
- Cost sharing and implementation strategy for the preferred drainage outlet option.

1.4 Traffic Study

As per the Terms of Reference, a *Traffic Impact Study, Fenelon Falls Arena & Community Centre and Other Identified Proposed Developments* (February 2010) was completed by Mark Engineering to address the potential traffic issues arising from the identified proposed development area in particular regarding the proposed intersection improvements at the intersection of Veterans Way, North Street and the access road to the fairgrounds. The traffic study is provided in **Appendix E** and a summary of the results, preliminary cost estimates and recommendations is provided in Section 6.0.

1.5 Municipal Class Environmental Assessment

The study was completed as per the Municipal Class EA Planning and Design Process as a Schedule B project. A Public Information Centre (PIC) was held at the Fenelon Falls Secondary School on 24 September 2009 and a presentation was provided. As such, this study effectively serves as a scoped "master drainage plan" for the identified future development areas and fulfills *Phase 1* and *Phase 2* of the Municipal Class Environmental Process regarding stormwater management by setting targets for quality, erosion and quantity controls.

Based on discussions at the PIC and comments received, the Public is generally supportive of the recommended drainage outlet and traffic solutions. Miscellaneous documentation including notices, comments from the Public, indication of how comments were addressed, and presentation materials provided at the PIC were included in the Project File as per Municipal Class EA process requirements.

2.0 EVALUATION OF EXISTING DRAINAGE CONDITIONS

2.1 Previous Studies

A review of the following studies provided by the City of Kawartha Lakes was completed in preparing the drainage study for Fenelon Falls (Basin DD):

- Totten Sims Hubicki (TSH) Association Limited, *Storm Drainage Study, South Half, Village of Fenelon Falls*, December 1978.
- TSH, *Stormwater Drainage Study 2004 Update – Phase II, Fenelon Falls and Immediate Area*, March 2005.
- TSH, *Fenelon Falls Water Distribution System Model*, September 2007.
- TSH, *City of Kawartha Lakes Storm Sewer System Inventory*.
- TSH, *Fenelon Falls Wastewater Collection System Model*, September 2007.

2.2 Existing Drainage Patterns and Flow Analysis

In order to confirm the drainage boundaries and flow patterns provided in previous reports, it was necessary to prepare a detailed base map with updated contour and land use information. A digital base map was prepared using digital elevation mapping (DEM) obtained from First Base Solutions. Contours with 0.25 m intervals were drawn and overlaid with satellite imagery for the study area as well as the legal fabric provided by the City. Using the updated base map, drainage areas were delineated. Two sizeable external drainage areas were identified that convey flow to Basin DD. A copy of the updated base mapping is provided on **Figure 2**. Generally, drainage flows from the southwest to the northeast along a poorly defined drainage course. Minor flows are collected at Helen Street in numerous inlets located along the length of the storm sewer. A branch of the Helen Street storm sewer extends within Basin DD and collects flow from the drainage course near the school track/field. Flow collected by the Helen Street storm sewer is conveyed to the outfall below the falls at the Fenelon River near Lindsay Street. Major flow exceeding the capacity of the Helen Street storm sewer overtops Helen Street and is conveyed through an existing industrial and residential area to the outlet of Cameron Lake above the falls.

2.2.1 Field Inspections and Drainage Surveys

Field inspections and a drainage survey were completed by Valdor Engineering to verify the existing minor and major overland flow routes. Discrepancies from previous reports were noted and revised accordingly on the updated storm drainage plan. There was very little information available regarding the Helen Street storm sewer and it was necessary to complete a detailed storm sewer survey to confirm existing plans and to obtain pipe diameter, slope and inverts required to complete capacity calculations. The results of the Helen Street storm sewer survey and revised storm sewer plan are provided in **Appendix A**. Additional field surveys were completed to quantify a flow split located behind Canadian Tire near Lindsay Street as well as to define the overland flow path behind Home Hardware near Lindsay Street. The results of the field surveys for the flow split analysis and overland flow route are provided in **Appendix B**.

2.2.2 Internal Drainage – Basin DD

Basin DD is approximately 27.6 ha in size and is broken into two sub-catchments as shown on **Figure 2**. Basin DD (north) is approximately 11.3 ha in size and consists of drainage that is collected by Helen Street and ditch inlets adjacent Helen Street where the road sits higher than the surrounding lands. Basin DD (south) is approximately 16.3 ha in size and consists of drainage that is ultimately collected by the Helen Street storm sewer extension. Drainage patterns within Basin DD generally flow from the southwest to the northeast and flow is collected along a low point that runs behind Canadian Tire and Home Hardware through a wetland area to the culvert under the entrance to the fairgrounds. From here the drainage course passes near the tennis courts and across Eva Street where it runs between the school track/field and the rear of lots along North Street to an inlet and storm sewer extension that connects with the Helen Street storm sewer. In addition to this drainage course, there is a pipe that appears to collect drainage in the vicinity of the tennis courts and convey flow under the school track/field and connects with the Helen Street storm sewer extension near Helen Street and King Street. The exact alignment, condition and capacity of this additional pipe are unknown. Based on field inspections and anecdotal reports of flooding in the area, the capacity of this pipe is not believed to be significant. Flow collected in the Helen Street storm sewer is conveyed to the outfall below the falls in the Fenelon River near Lindsay Street. Flow exceeding the capacity of the Helen Street storm sewer overtops the road at the low point east of King Street and is conveyed overland through an industrial and residential area to the outlet of Cameron Lake above the falls. As a result of the poorly defined drainage route within Basin DD and a storm sewer along Helen Street with limited capacity, there are areas within Basin DD that currently experience periodic flooding when heavy rains or rapid snowmelt occurs.

2.2.3 External Drainage and Flow Split Analysis

Two sizeable external drainage areas were identified and delineated (see **Figure 2**) that contribute flow to Basin DD. Catchment 99 is the largest of the external basins and is approximately 47.4 ha in size while Catchment 26 is approximately 21.9 ha in size. Flow from Catchment 99 is conveyed to a wetland area located to the southwest of Canadian Tire near Lindsay Street where flow is then split between that draining through the culvert under Lindsay Street and that draining to the drainage course behind Canadian Tire to Basin DD. Based on field surveys completed by Valdor Engineering, a rating curve was calculated to define the flow split in this area. Based on this analysis, smaller more frequent flows up to nearly the 2-yr event from Catchment 99 will not contribute flow to Basin DD due to a high point located behind Canadian Tire that exceeds the invert of the Lindsay Street culvert. Under a major rainfall event such as the 100-yr storm, however, most of the flow is conveyed to Basin DD as the capacity of the Lindsay Street culvert is limited. Results of the field survey and flow split analysis are provided in **Appendix B**.

Flow from Catchment 26 drains to the northeast toward the fairgrounds and is believed to occur primarily as sheet flow due to the relatively flat topography in this area.

2.2.4 Existing Drainage Outlet

Minor Flows:

As discussed previously, minor flows from Basin DD are conveyed to the Helen Street storm sewer extension located near the school track/field and Helen Street. Flow collected by the Helen Street sewer is conveyed to the outfall below the falls at the Fenelon River. Prior to the outfall, the Helen Street storm sewer connects with the Lindsay Street storm sewer.

Major Flows:

Major flow exceeding the capacity of the Helen Street storm sewer overtops Helen Street at the low point near King Street and is conveyed through an existing industrial and residential area to the outlet of Cameron Lake above the falls.

2.3 Capacity Analysis for Existing Storm Sewer System – Helen Street

The capacity of the existing Helen Street storm sewer system was calculated to assist with the preparation and evaluation of drainage outlet design options for the proposed arena/community centre and other identified proposed development areas.

2.3.1 Methodology

The capacity of the Helen Street storm sewer was modeled using PCSWMM 2009 which allows for both dual drainage analysis and HGL calculations. Basin DD was divided into numerous smaller catchments to enable the dual drainage analysis. The diameter, length, inverts and connectivity of the Helen Street storm sewer was coded in PCSWMM based on measurements obtained during the detailed storm sewer survey (see **Appendix A**). A copy of the model schematic and model output is provided in **Appendix C**. The model parameter values for the various catchments were measured and calculated and are provided in **Appendix B**. Based on an analysis to determine the critical storm duration (see **Appendix B**), the critical storm was determined to be the 24-hr Chicago design storm which was used in the PCSWMM model.

2.3.2 Results

Based on the results of the hydrology/hydraulic modeling using PCSWMM, the pipe capacity of the existing storm sewer along Helen Street was calculated to be less than the 2-yr storm assuming no surcharging. Even assuming the HGL near the road surface at the lowest maintenance hole (MH 8) in the vicinity of the low point on the road, the results demonstrate that additional capacity is very limited. The results of the storm sewer capacity analysis are provided in **Appendix B**. Flow that exceeds the capacity of the Helen Street storm sewer causes ponding and contributes to the existing flooding in low-lying areas and eventually overtops the road.

2.4 Hydraulic Analysis to Determine Existing Limits of Probable Flooding

As requested by the City, the extent of probable flooding for the 100-yr and Timmins storm was calculated within Basin DD.

2.4.1 Methodology

Peak flows for the HEC-RAS model were calculated using the hydrology program Visual OTTHYMO (VO2). Model runs were completed using the 100-yr Chicago design storm and the Timmins storm. The model parameter values were calculated for the VO2 model for each catchment using standard methods. A summary of the model parameter values used and supporting calculations are provided in **Appendix B**. A schematic of the model layout and model output are provided in **Appendix C**.

A hydraulic model using HEC-RAS was prepared to simulate the probable flooding limits along the drainage course in Basin DD. The cross sections cut for the HEC-RAS model were obtained from the updated topographic mapping and verified based on the field inspection and survey. Since there is no well defined water course or flow route in Basin DD, the Manning's roughness coefficient was set as 0.08 for all the cross sections to be conservative. The peak flows applied in the HEC-RAS model were derived based on the VO2 model simulations for Catchment 99, Catchment 26 and Catchment 18. As a conservative measure, the flows from the downstream flow node within a given catchment were used for the HEC-RAS model and applied to the top of the same catchment. Flows were adjusted to account for the flow conveyed under the Lindsay Street culvert and away from Basin DD. Flows applied to the HEC-RAS model in the vicinity of Helen Street were adjusted to account for the flow captured by the Helen Street storm sewer based on the PCSWMM hydraulic model completed for the Helen Street storm sewer capacity analysis. The 100-year water surface elevation of Cameron Lake (255.75m) obtained from Kawartha Conservation was applied as the downstream boundary condition. The HEC-RAS model schematic and model output are provided in **Appendix C**.

2.4.2 Results

Based on the VO2 and HEC-RAS modeling results, the water surface elevation (WSEL) for 100-year and the Timmins storms were delineated on the drainage plan. As such, the extent of probable flooding for the 100-yr and Timmins storms is indicated on **Figure 3**. The extent of probable flooding also includes the high water level associated with the 100-yr lake level in Cameron Lake obtained from Kawartha Conservation. Based on results from the HEC-RAS model it is estimated that Helen Street overtops at approximately the 5-yr storm.

2.5 Natural, Social and Economic Environment

The key study area, which lies within Basin DD, consists of a mix of existing residential, commercial, industrial and recreational development. The existing drainage course and drainage system along Helen Street has limited capacity and nuisance flooding is periodically experienced which causes an inconvenience to local residents. During a major storm event, a number of properties and buildings along the existing drainage course are vulnerable to flooding and potential damages.

The existing drainage course is identified as a regulated area by Kawartha Conservation. A copy of the regulation mapping provided by Kawartha Conservation is included in **Appendix A**. Based on discussions with the Conservation Authority, the existing drainage course within Basin DD is not considered to be sensitive in terms of fisheries or other habitat. The City has identified Fenelon Falls to be in need of a new arena and community centre in order to meet demand for these services.

3.0 DRAINAGE OPTIONS TO ACCOMMODATE PROPOSED FUTURE DEVELOPMENT

3.1 Proposed Future Developments

Based on discussions with the City, 3 proposed development areas were identified that currently do not have a suitable drainage outlet to enable development to proceed. The 3 developments are located within Basin DD in the Village of Fenelon Falls as indicated on Figure 4. The immediate need regarding a drainage outlet is to service the proposed arena and community centre to be located on the existing fairgrounds that is scheduled for construction in 2010. In addition, two other areas have been identified for future development including Sugarbush Villas and the Wright development.

3.2 Stormwater Management Criteria

Major and minor system flows must be controlled on site to the allocated unit flow target release rates to ensure that the capacity of the proposed drainage outlet is not exceeded. Water quality control must also be provided on site.

3.2.1 Quality Control

The level of water quality control for the identified proposed development areas is the Enhanced level of protection. Typical methods of achieving quality control include grassed swales, oil/grit separators, vegetated filter strips or SWM facilities.

3.2.2 Erosion Control

Since the proposed storm sewer will outlet directly to a large river and lake system, there is no requirement for erosion control.

3.2.3 Quantity Control

Since the proposed storm sewer will outlet directly to a large river and lake system, no quantity control is required for the purpose of flood control. Quantity control is required, however, to ensure that the capacity of the proposed outlet is not exceeded. Typical methods of achieving quantity control include parking lot storage, roof storage, underground storage or SWM facility storage.

3.3 List of Initial Stormwater Management and Storm Drainage Outlet Options

In order to complete an evaluation of alternatives for the proposed drainage outlet to service identified proposed development in Basin DD, a number of potential drainage outlet options were analyzed. The list of initial options consisted of 7 different scenarios each designed to provide an outlet for the proposed arena/community centre alone or in conjunction with other identified proposed development areas. The alternatives are labeled Option 1 through Option 7 and this section provides a brief description of each alternative.

Option 1 On-line Storage and Flow Control

Construct on-line SWM facilities to provide flood storage and flow attenuation. Three variations of this option were explored. *Option 1(a)* consists of a large storage facility located in the wetland area to the southwest of Canadian Tire near Lindsay Street. Flow from the large upstream drainage area would be stored in this facility and attenuated. A dual outlet structure would be designed such that additional flow would be diverted to the culvert under Lindsay Street and only limited flow would be conveyed to the existing drainage course in Basin DD. It is unknown, however, what the impact of increased flow to the Lindsay Street watercourse would be and additional studies would be required in this regard to mitigate any potential impacts such as increased erosion or flooding downstream. *Option 1(b)* and *Option 1(c)* consist of on-line storage facilities located in the vicinity of the West Street unopened road ROW north and south of the existing fairgrounds entrance. Initially, it was thought that such an approach could provide sufficient over-control such that runoff from proposed development could be released uncontrolled and the existing flooding problems could be mitigated. Preliminary modeling of this option, however, indicated that it is not practical to provide sufficient over-control storage and that additional on-site SWM facilities would be required. In addition, the cost of constructing on-line storage facilities is high. The configuration for Option 1 is provided on **Figure 5**.

Option 2 – Arena Outlet to West Street

Construct a separate drainage outlet northwest of the proposed arena/community centre along the unopened road ROW across the existing school track/field and along West Street to Cameron Lake. Due to the very limited grade difference along this route, it is anticipated that the arena/community centre site would require significant quantities of fill and it may not be possible to achieve sufficient cover along the entire route. In addition, the existing school track/field within the unopened road ROW would need to be excavated. Such an option provides an outlet for the arena/community centre only and does not contribute significantly to alleviating the existing flooding problem. The configuration for Option 2 is provided on **Figure 5**.

Option 3 – Arena Outlet to Bass Street

Construct a separate drainage outlet northwest of the proposed arena/community centre along the Helen Street access to the fairgrounds and Bass Street to Cameron Lake. Similar to Option 2, there are potential issues with this option regarding grade difference, requirements for fill and limited alleviation of existing flooding problems. The configuration for Option 3 is provided on **Figure 5**.

Option 4 – Arena Outlet to Helen Street

Construct a separate drainage outlet north of the proposed arena/community centre along the unopened road ROW across the existing school track/field and along Helen Street to adjacent the existing outfall below the falls near Lindsay Street. While this option provides an outlet for the arena/community centre, it does not provide an outlet for the other identified proposed development areas and does not contribute significantly to alleviate the existing flooding problem. In addition, the existing school track/field within the unopened road ROW would need to be excavated. The configuration for Option 4 is provided on **Figure 6**.

Option 5 – Arena Outlet to North Street

Construct a separate drainage outlet east of the proposed arena/community centre along North Street and Helen Street to adjacent the existing outfall below the falls near Lindsay Street. While this option provides an outlet for the arena/community centre, it does not provide an outlet for the

other identified proposed development areas and does not contribute significantly to alleviate the existing flooding problem. Compared with the other options to service the arena/community centre only, this option requires the shortest length of storm sewer. The configuration for Option 5 is provided on **Figure 6**.

Option 6 – Shared Outlet to North Street for Current Proposed Developments

Construct a separate drainage outlet along North Street and Helen Street to adjacent the existing outfall below the falls near Lindsay Street to service the arena/community centre as well as the other identified proposed development areas. The advantage of this option is that it provides a drainage outlet for all identified proposed development areas and will contribute to improving the existing flooding problem (in particular for the more frequent events) as the development areas are connected to the new drainage outlet over time. SWM controls are still required on-site for water quality and quantity controls are required to the capacity of the outlet. The total cost of the shared outlet is higher than constructing an outlet for the arena/community centre alone, however, the cost to the City and participating developers could be reduced considerably by pursuing cost sharing opportunities. The configuration for Option 6 is provided on **Figure 6**.

Option 7 – Do Nothing

Maintain the *status quo* (*i.e.* no outlet or drainage improvements). Without the construction of a suitable outlet, it is not feasible to proceed with the identified proposed development as the existing flooding issues would be exacerbated due to increased runoff volumes contributing to an already poorly defined and inefficient drainage system that is prone to flooding.

3.4 Evaluation of Drainage Outlet Options

3.4.1 Evaluation Criteria

The evaluation criteria selected for ranking the various options were formulated based on professional judgment and a sense of the important issues derived based on the discussions with the City of Kawartha Lakes. Accordingly, the evaluation criteria were chosen to include the following:

- cost of construction;
- opportunity for cost sharing;
- social and economic benefits;
- contribution to alleviating the existing flooding problem;
- impact on the environment, and
- ease of implementation.

Cost of Construction

The cost of construction includes material and labour costs associated with mobilization, the removal of bedrock (assuming blasting) to construct trenches for the storm sewer, bedding, installation of storm pipe and maintenance holes, outfall, cover and backfilling, partial road repair (*i.e.* trench restoration and asphalt patch over storm sewer installation only) or full repair (*i.e.* construction of new road with curb and gutter and CB's), and a 20% contingency. The cost of construction does not include costs associated with engineering fees, contract administration and inspections and land acquisition (if required).

Opportunity for Cost Sharing

The cost of the drainage outlet is minimized if the City and other identified developers pursue cost sharing opportunities. Outlet options that service only the proposed arena and community centre are more costly for the City and ultimately for the other identified developers as well while options to service all identified developments would be the least costly for all parties assuming some form of cost sharing is implemented.

Social and Economic Benefits

Some of the social and economic benefits (either direct or indirect) that may result from the development of the arena, community centre and other identified proposed developments include increased employment for local workers (which leads to further opportunities to contribute to an expanding local economy at all levels) and an expanded tax base for the municipality and upper levels of government. The development of the arena and community centre will serve an identified need in the community for such facilities.

Contribution to Alleviating the Existing Flooding Problem

One of the criteria regarding the selection of the preferred drainage outlet option is that the existing flooding problem along the major overland flow route should be improved and must not be exacerbated. Options that may direct future flow away from the existing flood prone areas are considered beneficial as they result in an overall improvement to the existing flooding issues.

Impact on the Environment

Impact on the environment includes various short term and long term aspects of environmental impact such as any degradation of existing habitat required to construct the drainage outlet works or the impacts to the environment once the proposed works are constructed and operational.

Ease of Implementation

Ease of implementation refers to how easily the drainage outlet option could be implemented as well as the estimated time allocation required by the City to achieve the end result. It is assumed that the time requirement increases with any additional requirements such as land ownership transfers or additional and/or more detailed studies or investigations.

3.4.2 Preliminary Cost Estimate for Ranking Purposes

In order to rank the options in terms of total estimated cost, a preliminary cost estimate was prepared for each of the proposed options. A summary of the total estimated costs is provided in the table below and additional cost details for each of the options is provided in **Appendix D**.

Total Preliminary Estimated Costs for Initial Drainage Options - - for Ranking Purposes Only

Alternative	*Preliminary Estimated Construction Cost*
Option 1	$3,672,000
Option 2	$818,100 - $916,200
Option 3	$901,500 - $1,023,000
Option 4	$1,138,500 - $1,341,000
Option 5	$1,213,000 - $1,326,300
Option 6	$1,618,200 - $1,879,200

The preliminary cost estimate (for ranking purposes only) includes material and labour costs with a 20% contingency. Costs associated with the relocation of existing underground servicing/infrastructure (if required), engineering fees, and contract administration and inspection fees are *not* included. Although it is not an anticipated requirement for the preferred alternative, costs associated with any additional land acquisition (if required) is *not* included in the estimate.

3.4.3 Evaluation Procedure

The evaluation criteria were each assigned a "Normalized Priority Value" (NPV) based on the level of importance of each criterion. The sum total of all NPVs is 1.00. Similar to the selection of evaluation criteria, the NPVs were assigned based on professional judgment and a sense of relative importance of each criterion gained through discussions with the City and any feedback from landowners or other stakeholders within the Study Area. The NPVs were assigned as follows:

- cost of construction (0.25);
- opportunity for cost sharing (0.25);
- social and economic benefits (0.20);
- contribution to alleviating the existing flooding problem (0.15);
- impact on the environment (0.10); and
- ease of implementation (0.05).

The listed options were then ranked in order of best (1) to worst (7) for each of the evaluation criteria. In order to calculate the preferred option, the sum total of the product of rank and NPV for each criterion was calculated to obtain a total weighted score. Based on the evaluation procedure, the option with the lowest total weighted score was assumed to be the preferred alternative.

3.4.4 Results of the Evaluation

A summary of the evaluation and ranking procedure is provided in **Table 1**. Based on this approach, the preferred flood reduction alternative was determined to be Option 6.

The advantages of the preferred alternative (Option 6) include the following:

- The existing flooding problems are not exacerbated and flow is directed away from flood prone areas which will help to improve the existing flooding issues especially for more frequent rainfall events;
- The cost of construction can be shared with other identified developers which reduces the overall cost of construction for each party assuming a drainage outlet to North Street; and
- The need for any additional technical studies is minimized.

3.5 Impacts of the Preferred Drainage Outlet to the Environment

The impacts of the preferred drainage outlet option on the natural, social and economic environment are anticipated to be generally positive. The proposed outlet and drainage plan will enable the development of the arena and community centre as well as the other identified proposed development sites by providing a safe and effective conveyance route for stormwater runoff. These developments will serve to satisfy a current recreational and community need as well as to provide an overall economic benefit to the area. As drainage is diverted away from the existing drainage course in the future, the extent of flooding in existing flood prone areas will be alleviated in particular for smaller more frequent storms. Since the proposed drainage outlet will be constructed within the existing road allowance and utility corridor, there will be minimal impacts to the natural environment due to construction. The proposed construction of the storm sewer along North Street, Helen Street and Lindsay Street will cause some minor inconvenience for local residents and motorists. Local residents may also be inconvenienced by additional noise should blasting be implemented for the excavation of bedrock.

4.0 CONCEPTUAL DESIGN FOR THE PREFERRED DRAINAGE OPTION

After reviewing feedback from the public at the Public Information Centre (PIC), as well as subsequent discussions with the City, the preferred alternative (Option 6) was further refined into several sub-options. This was completed in order to evaluate a variety of flow control and storm sewer options to minimize constructions costs. Based on this additional analyses and evaluation, the conceptual design for the preferred alternative was selected.

4.1 Additional Refinement of the Preferred Option Prior to Conceptual Design

Initially, 7 drainage options were identified and presented at the PIC. Based on feedback from the public and subsequent discussions with the City, an additional number of options were identified all variations of Option 6 whereby the outlet is located on North Street. The additional options are identified as Option 6A to 6F and are described below.

Alternative 6A – Shared Outlet with Flow Controlled to the 2-year Post-Development Rate

Construct a separate shared drainage outlet along North Street and Helen Street to adjacent the existing outfall below the falls near Lindsay Street to service the arena/community centre as well as two other identified proposed development areas. The SWM criteria for all identified proposed developments will be the enhanced level of protection for water quality and unit flow rates will be allocated based on the capacity of the proposed outlet which is sized to convey the 2-yr post-development flow. A 900 mm diameter storm sewer is proposed at a cost of approximately $1,336,116. This option requires a smaller diameter storm sewer than for Option 6B which reduces the cost of the drainage outlet, however, the cost of on-site SWM controls is likely greater due to increased quantity control and storage requirements. This option will help alleviate the existing flooding problem as runoff from the proposed development areas is eventually diverted away from existing flood prone areas to the new outlet. Although the total construction cost of a shared outlet is higher than constructing an outlet for the arena/community centre alone, the cost to the City and participating developers could be reduced considerably by pursuing cost sharing opportunities. The configuration for Option 6A is provided on **Figure 7**.

Alternative 6B – Shared Outlet with Flow Controlled to the 5-year Post-Development Rate

Construct a separate shared drainage outlet along North Street and Helen Street to adjacent the existing outfall below the falls near Lindsay Street to service the arena/community centre as well as two other identified proposed development areas. The SWM criteria for all identified proposed developments will be the enhanced level of protection for water quality and unit flow rates will be allocated based on the capacity of the proposed outlet which is sized to convey the 5-yr post development flow. A 975 mm diameter storm sewer is proposed at a cost of approximately $1,416,630. This option requires a larger diameter storm sewer than for Option 6A which increases the cost of the drainage outlet, however, the cost of on-site SWM controls is likely lower due to reduced quantity control and storage requirements. This option will help alleviate the existing flooding problem as runoff from the proposed development areas is eventually diverted away from existing flood prone areas to the new outlet. Although the total construction cost of a shared outlet is higher than constructing an outlet for the arena/community centre alone, the cost to the City and participating developers could be reduced considerably by pursuing cost sharing opportunities. The configuration for Option 6B is provided on **Figure 7**.

Alternative 6C -- Outlet for Arena/Community Centre Only with Flow Controlled to the 2-year Post-Development Rate

Construct a separate drainage outlet along North Street and Helen Street to adjacent the existing outfall below the falls near Lindsay Street to service the arena/community centre *only*. The SWM criteria will be the enhanced level of protection for water quality and flow release rates will be based on the capacity of the proposed outlet which is sized to convey the 2-yr post-development flow. A 600 mm diameter storm sewer is proposed (assuming road improvements to North Street) at a cost of approximately $1,024,795. This option requires a smaller diameter storm sewer than for Option 6D which reduces the cost of the drainage outlet, however, the cost of on-site SWM controls is likely greater due to increased quantity control and storage requirements. This option does not significantly contribute to improving the existing flooding problems. Although the total construction cost of this outlet is lower than the cost to construct a shared outlet to accommodate additional development, it does not enable cost sharing which could significantly reduce the cost to the City and participating developers. The configuration for Option 6C is provided on **Figure 7**.

Alternative 6D – Outlet for Arena/Community Centre Only with Flow Controlled to the 5-year Post-Development Rate

Construct a separate drainage outlet along North Street and Helen Street to adjacent the existing outfall below the falls near Lindsay Street to service the arena/community centre *only*. The SWM criteria will be the enhanced level of protection for water quality and flow release rates will be based on the capacity of the proposed outlet which is sized to convey the 5-yr post-development flow. A 675 mm diameter storm sewer is proposed (assuming road improvements to North Street) at a cost of approximately $1,093,807. This option requires a larger diameter storm sewer than for Option 6C which increases the cost of the drainage outlet, however, the cost of on-site SWM controls is likely lower due to reduced quantity control and storage requirements. This option does not significantly contribute to improving the existing flooding problems. Although the total construction cost of this outlet is lower than the cost to construct a shared outlet to accommodate additional development, it does not enable cost sharing which could significantly reduce the cost to the City and participating developers. The configuration for Option 6D is provided on **Figure 8**.

Alternative 6E – Outlet for Arena/Community Centre Only Assuming Upgrades to the Helen Street Sewer with Flow Controlled to the 2-year Post-Development Rate

Construct a separate drainage outlet along North Street and upsize the existing Helen Street storm sewer to the existing outlet below the falls near Lindsay Street to service the arena/community centre *only*. The SWM criteria will be the enhanced level of protection for water quality and flow release rates will be based on the capacity of the proposed outlet which is sized to convey the 2-yr post-development flow. A 600 mm diameter storm sewer is proposed along North Street (assuming road improvements to North Street) as well as upsizing the existing storm sewer along Helen Street to a 900 mm diameter pipe and upsizing the storm sewer from Lindsay Street to the outlet to a 1200 mm diameter pipe at a cost of approximately $1,183,997. This option requires a smaller diameter storm sewer than for Option 6F which reduces the cost of the drainage outlet, however, the cost of on-site SWM controls is likely greater due to increased quantity control and storage requirements. This option does not significantly contribute to improving the existing flooding problems. Although the total construction cost of this outlet is lower than the cost to construct a shared outlet to accommodate additional development, it does not enable cost sharing which could significantly reduce the cost to the City and participating developers. The total cost of this option is greater than that for Option 6C and a notable design issue is the uncertainty in storm sewer

capacity estimates due to unknown inlet capture rates for the Lindsay Street storm sewer that connects with the Helen Street storm sewer above the outlet to the Fenelon River. The configuration for Option 6E is provided on **Figure 8**.

Alternative 6F – Shared Outlet Assuming Upgrades to the Helen Street Sewer with Flow Controlled to the 5-year Post-Development Rate

Construct a shared separate drainage outlet along North Street and upsize the existing Helen Street storm sewer to the existing outlet below the falls near Lindsay Street to service the arena/community centre as well as the other identified proposed development areas. The SWM criteria will be the enhanced level of protection for water quality and flow release rates will be based on the capacity of the proposed outlet which is sized to convey the 5-yr post-development flow. A 975 mm diameter storm sewer is proposed along North Street (assuming road improvements to North Street) as well as upsizing the existing storm sewer along Helen Street to a 1200 mm diameter pipe and upsizing the storm sewer from Lindsay Street to the outlet to a 1350 mm diameter pipe at a cost of approximately $1,613,610. This option requires a larger diameter storm sewer than for Option 6E which increases the cost of the drainage outlet, however, the cost of on-site SWM controls is likely lower due to reduced quantity control and storage requirements. This option will help alleviate the existing flooding problem as runoff from the proposed development areas is eventually diverted away from existing flood prone areas to the new outlet. Although the total construction cost of a shared outlet is higher than constructing an outlet for the arena/community centre alone, the cost to the City and participating developers could be reduced considerably by pursuing cost sharing opportunities. The total cost of this option is greater than that for Option 6B and a notable design issue is the uncertainty in storm sewer capacity estimates due to unknown inlet capture rates for the Lindsay Street storm sewer that connects with the Helen Street storm sewer above the outlet to the Fenelon River. The configuration for Option 6F is provided on **Figure 8**.

A preliminary cost estimate was completed for each of the refined alternatives (6A through 6F). A summary of the cost estimates as well as the advantages and disadvantages of the various refined options is provided in **Table 3**. Additional supporting cost calculations are provided in **Appendix D**.

Using the same evaluation procedure as completed for the initial design alternatives in Section 3, the refined options were evaluated to determine the preferred alternative. A summary of the evaluation and ranking procedure is provided in **Table 2**. Based on this approach, the preferred flood reduction alternative was determined to be Option 6B.

The advantages of the preferred alternative (Option 6B) include the following:

- The requirements for on-site SWM quantity control is reduced compared that for an outlet sized for the 2-yr flow;
- By providing a dedicated outlet for the identified proposed development areas, there is no uncertainty in outlet conveyance capacity resulting from unknown inlet flows contributing to the system from the Lindsay Street storm sewer;
- The existing flooding problems are not exacerbated and flow is directed away from flood prone areas which will help to improve the existing flooding issues especially for smaller more frequent rainfall events;
- The cost of construction can be shared with other identified developers which reduces the overall cost of construction for each party assuming a drainage outlet

to North Street; and

- The need for any additional technical studies is minimized.

4.2 Conceptual Design Details

The conceptual design for the preferred alternative (Option 6B) consists of the following elements:

1. The preferred drainage outlet option is designed to service the following identified proposed developments:
    a. Arena and Community Centre (1.5 ha)
    b. Sugarbush Villas (0.4 ha)
    c. Wright Development (6.6 ha)
    d. North Street (with road improvements) (0.86 ha)
2. A new 975 mm diameter concrete storm sewer to be installed along North Street (from the intersection of Veteran's Way and North Street) and along Helen Street toward Lindsay Street and from Lindsay Street to adjacent the existing outfall located below the falls at the Fenelon River.
3. The average slope of the storm sewer was assumed to be 0.5% from the intersection of North Street and Veteran's Way to the outfall at the Fenelon River.
4. The total length of the storm sewer is approximately 640 m.
5. Assuming that improvements to North Street will be completed along with the installation of the proposed drainage outlet, approximately 6 maintenance holes and approximately 10 catch basins will be required.
6. The proposed SWM control requirements for the identified proposed development areas are as follows:
    a. Water Quality – Enhanced level of protection for the identified development areas.
    b. Erosion Control – None required as proposed outfall is to lake system
    c. Quantity Control – unit flow release rates (max. to 100-yr) must be applied based on allocated unit flow control targets that do not exceed the drainage outlet capacity as follows:
        i. Wright Development: 128.7 L/s/ha
        ii. Arena and Community Centre – 240.0 L/s/ha
        iii. Sugarbush Villas Development – 216.0 L/s/ha
        iv. North Street (assuming road improvements) – 167.4 L/s/ha
7. Drop structure(s) may be required to ensure that the proposed storm sewer clears any existing infrastructure such as water mains, storm sewers and sanitary sewers. Further investigations are required in this regard at the detailed design stage. It is anticipated that a drop structure will be required to clear the existing Lindsay Street storm sewer.
8. The requirements for a headwall in the rock face at the Fenelon River should be investigated at the detailed design stage. It is anticipated as a minimum requirement that concrete reinforcement will be required at the outfall around the storm pipe for stabilization.

9. It is assumed that the City will implement road improvements to North Street (*i.e.* curb and gutter) at the time of construction of the drainage outlet. Otherwise, road repairs following installation of the storm sewer on North Street will consist of an asphalt patch. It is anticipated that road repairs following the storm sewer installation on Helen Street and Lindsay Street will consist of an asphalt patch and that full road repair would be left until future scheduled paving works are completed along these roads.

4.3 Preliminary Construction Cost Estimate

Based on preliminary cost calculations, the estimated total cost for the preferred option is $1,416,630, of which $249,600 is associated with the proposed road improvements to North Street. The cost estimate includes material and labour costs associated with mobilization, the removal of bedrock assuming blasting to construct trenches for the storm sewer, bedding, installation of storm pipe and maintenance holes, outfall, cover and backfilling, partial road repair (*i.e.* trench restoration and asphalt patch over storm sewer installation only) or full repair (*i.e.* construction of new road with curb and gutter and CB's), and a 20% contingency. A detailed summary of the preliminary cost estimate is provided in **Tables D.3 and D.4** in **Appendix D**. The excavation of rock is estimated based on a minimum cover requirement of 1.2 m and an assumed storm sewer slope of 0.5%. It is assumed that a drop structure will be required to clear the Lindsay Street storm sewer and the cost of the additional rock excavation and material costs associated with this work is included in the estimate. Costs associated with the relocation of existing underground servicing/infrastructure (if required), engineering fees, and contract administration and inspection fees are *not* included. Although it is not an anticipated requirement for the preferred alternative, costs associated with any additional land acquisition (if required) is *not* included in the estimate.

4.4 Recommendations Prior to Detailed Design

Based on a review of available reports from the City, it is noted that existing services such as water and sanitary sewer exist along North Street. In addition, existing services such as storm sewer, water and sanitary sewer are located along Helen Street and Lindsay Street. Prior to detailed design, investigations should be completed to confirm that none of the existing services along the proposed construction route will be an insurmountable obstacle to the planned drainage outlet. A preliminary analysis indicates that there is sufficient grade to install the proposed storm sewer outlet and to convey flow from the North Street outlet to the proposed outfall adjacent the existing outfall near the base of the falls and Lindsay Street. It is assumed that any existing servicing can be circumnavigated using drop structures in the proposed storm sewer design if required. It should also be confirmed prior to detailed design that sufficient filling and grading of the identified proposed development areas is feasible to ensure that storm runoff can be effectively conveyed to the proposed outlet on North Street.

5.0 COST SHARING AND IMPLEMENTATION STRATEGY FOR THE PREFERRED DRAINAGE OPTION

5.1 Cost Sharing Strategy

Based on the preliminary cost analysis, it is less costly for the owners of the three identified proposed developments to share in the cost of a new common drainage outlet than for each of the developers to proceed independently assuming a drainage outlet to North Street. The cost to construct independent outlets (assuming this is feasible and assuming partial repair of roads only) for each development is between approximately $700,000 and $1,200,000 whereas the estimated shared cost for each development area assuming a common outlet and road improvements to North Street is between approximately $70,000 and $660,000. As such it is recommended that the City and the identified landowners meet to discuss opportunities to share and minimize construction costs as soon as possible.

Regarding cost sharing of the construction costs for the proposed outlet, there are effectively two options for the City to pursue. The first option is to enter into a *cost sharing agreement* with the identified proposed developers and the second option is to implement *special area development charges* for the identified proposed development areas.

5.1.1 Cost Sharing Agreement

A cost sharing agreement is recommended as the first course of action whereby the three identified landowners should meet to discuss opportunities to share in the cost to construct a common outlet. If the three parties agree to proceed in this manner, an agreement should then be prepared and signed and financial contributions may be collected either up-front or upon registration of the site plan or subdivision (*i.e.* once the developer enters into a site plan or subdivision agreement with the City). One advantage of this approach is the opportunity for all parties involved to discuss and negotiate a cost sharing strategy that is mutually agreeable.

5.1.2 Special Area Development Charges

Should it be determined that a cost sharing agreement is not feasible, the next recommended course of action for the City is to implement special area development charges to assist in financing capital costs associated with the proposed outlet. The charges are typically calculated based on a cost sharing analysis and are typically collected on a cost per hectare basis for the subject development area. Special area development charges are implemented in the form of a municipal by-law whereby development in the identified areas is not permitted to proceed unless the requisite fees are collected upon entering into a site plan or subdivision agreement with the City. Typically, development charges may be adjusted semi-annually, without amendment to the current by-laws, in accordance with the most recent change in the Statistics Canada Quarterly, Construction Price Statistics. Prior to the passing of a new development charge by-law, a Development Charge Background Study may be required.

5.1.3 Cost Sharing Analysis

The total cost for the preferred option is $1,416,630, of which $249,600 is associated with the proposed road improvements to North Street. The costs associated with the proposed outlet have been separated into items that are to be shared by the identified contributing landowners and those

items that will be paid solely by the City. Items to be shared between landowners consist of costs directly attributed to the installation of the shared outlet which include the cost of the outlet to service the assumed total development area and partial road repair (*i.e.* asphalt patch) only. It is assumed that the additional cost to collect and convey runoff in the proposed storm sewer (*i.e.* cost to increase sewer capacity) associated with the improvements to North Street (assuming new road construction with curb and gutter and CB's) and the cost of full road repair on North Street will be borne by the City. It is assumed for this analysis that partial road repair (*i.e.* asphalt patch) only will be completed for Helen Street and Lindsay Street.

It is recommended that the unit rate for cost contributions from each of the proposed developments should be calculated based on assigned flow allocation. A preliminary assigned flow allocation was calculated based on assumed development areas and land use type as provided by the City. The assigned flow allocation was based on modeled flows for the proposed development areas using the 5-yr design storm which was determined to be a practical level of control (*i.e.* proposed developments must provide quality control and quantity control based on unit flow rates – approximately equal to the 5-yr post-development flow) accounting for outlet pipe size and on-site stormwater control requirements. Regarding the collection and conveyance of runoff from the North Street catchment assuming full road repair (*i.e.* curb and gutter), the proposed storm sewer capacity was calculated assuming capture of the 2-yr design storm from this area as per City standards. Based on the hydrologic model and the assumptions pertaining to the nature of the identified proposed development and level of SWM control, the capacity requirements for the proposed drainage outlet was calculated to be 1.44 m^3/s.

A summary of the recommended unit flow control rates and unit flow rate contributions based on the assigned flow allocation is provided in **Table 4**. It should be noted that the assigned flow allocation is based on assumed areas of proposed development and land use type as per discussions with the City. Should these assumptions be further refined for any reason, the assigned allocation and unit cost contributions may need to be revisited and revised accordingly. Based on the estimated preliminary cost of $1,167,030 (assuming partial road repair only), the total calculated cost share allocation for the City is $291,758 (City's share for outlet) + $116,703 (cost to upsize outlet to capture runoff associated with North St. road improvements) + $249,600 (cost of North St. road improvements) = $658,061. The ultimate cost share quantities may be further refined subject to further negotiations should the City pursue discussions with the other identified developers and prepare a cost sharing agreement. This cost estimate is considerably less than the estimated cost of $1,093,807 required to provide an outlet to North Street for the arena and community centre alone.

5.2 Implementation Strategy

The following list is intended as a guide or suggested list of next steps for the City regarding the implementation of the preferred drainage outlet and traffic improvement options:

1. Secure Council approval of the drainage and traffic study report and the recommended preferred options.
2. Arrange preliminary meetings with the developers associated with the identified proposed developments to discuss cost sharing strategy for the proposed drainage outlet option and to confirm development assumptions.
3. Prepare the Notice of Completion as per the Municipal Class EA process.
4. 30-day review period.

5. Confirm the preferred drainage and traffic options and complete the detailed design and detailed cost estimate for the proposed outlet and traffic improvements.
6. Implement the required SWM controls for the proposed site plan for the arena and community centre.
7. Obtain required construction permits from various agencies (*e.g.* KC, MNR if required)
8. If a cost sharing agreement appears to be feasible and time-effective for the proposed drainage outlet, meet with the identified developers to finalize and sign the cost sharing agreement based on the detailed cost analysis.
9. If cost sharing agreement for the proposed drainage outlet is not feasible, then proceed to implement special area development charges for the outlet (a Development Charge Background Study may be required).
10. Prepare tender documents and construction drawings for the proposed outlet and traffic improvements.
11. If a cost sharing agreement is prepared for the proposed drainage outlet, the City and participating landowners to contribute allocated funds as per the cost sharing analysis and negotiated details of the agreement.
12. If cost sharing agreement not prepared for the proposed drainage outlet, then the City to front-end construction cost for the proposed outlet and area specific development charges to be collected as the identified proposed developers enter into a site plan or subdivision agreement with the City.
13. Construct the proposed outlet and traffic improvements.

6.0 TRAFFIC IMPACT STUDY

In addition to the drainage study, a traffic study was completed to assess and address impacts of the proposed arena and community centre on local traffic patterns and volumes. In particular, the traffic study examined the intersection of Veterans Way, North Street and the entrance to the fairgrounds and prepared several conceptual design options to improve the anticipated increase in traffic flow at this intersection. The options considered included single stop controlled, all-way stop and a roundabout design. Based on an evaluation of the intersection options it was determined that the roundabout design was the preferred alternative. This design will enable efficient movement of traffic through the intersection with minimal stopping requirements. A roundabout also has the flexibility to serve different levels of demands on the various approaches. A preliminary design of the proposed roundabout option is provided in **Figure 10**. Based on a preliminary cost estimate, the proposed roundabout option will cost approximately $60,000. This cost excludes contingency, engineering fees, contract administration and inspections.

It is anticipated that the construction of the roundabout would be completed in conjunction with the construction of the proposed drainage outlet and road improvements on North Street. A copy of the *Traffic Impact Study, Fenelon Falls Arena & Community Centre and Other Identified Proposed Developments* (Mark Engineering, February 2010) is provided in **Appendix E**.

In addition to the roundabout, the following improvements are also recommended to better meet traffic needs within the study area:

1. The two eastbound lanes at Colborne Street & Francis Street should be converted to a combined left turn and through lane and a right turn only lane.
2. Advanced green phases should be implemented for the eastbound-to-northbound left turns and for the southbound-to-eastbound left turns at Colborne Street/Lindsay Street and Helen Street intersection.
3. The installation of fully-actuated traffic control signals at the Lindsay Street and Veterans Way intersection should be considered.

It is anticipated that access to the proposed development to the west (Wright Development) would occur via the 20 m strip of property ("right-of-way") located between the fairgrounds property and the existing Wright property. This land is currently privately owned and would need to be either dedicated by the owner as a public road, purchased by someone other than the City and then dedicated as public road, or purchased by the City and dedicated as public road. Assuming a 100 m length of road to access the proposed Wright development, the preliminary cost estimate is approximately $20,000 to purchase the land and approximately $150,000 to construct the road. Additional details and assumptions regarding these costs are provided in the *Traffic Impact Study, Fenelon Falls Arena & Community Centre and Other Identified Proposed Developments* (Mark Engineering, February 2010) provided in **Appendix E**.

It is not anticipated that there will be any negative impacts associated with the proposed traffic improvements regarding the natural, social and economic environment. It is anticipated that the impacts will be positive and will enable effective movement of vehicular traffic associated with the proposed arena and community centre and other identified proposed developments.

7.0 SUMMARY AND RECOMMENDATIONS

Following the requirements of the Municipal Class EA Planning and Design Process, the Fenelon Falls Drainage and Traffic Impact Study was completed as a Schedule B project. The following is a brief summary of the components of the study that satisfies *Phase 1* and *Phase 2* of the EA process.

1. **Identify Problem or Opportunity:** There are areas within Basin DD in the Village of Fenelon Falls that are currently prone to flooding due to the limited capacity of the existing Helen Street storm sewer and a poorly defined overland drainage path. There is a need to find a suitable outlet for the identified future development areas within Basin DD. As such, a drainage study is required to find a solution whereby any future development in the area does not exacerbate the existing flooding problem and preferably provides some flood relief. In addition, a traffic study is required to assess and address any impacts resulting from increased vehicular traffic associated with the proposed arena and community centre and other identified proposed developments.

2. **Identify Alternative Solutions to Problem or Opportunity:** A list of six initial drainage outlet options was prepared including on-line storage, on-site SWM controls with selected criteria and a new drainage outlet at different locations to provide a solution for the existing drainage problem. A number of traffic solutions were prepared in particular for the intersection of Veterans Way, North Street and the fairgrounds entrance.

3. **Inventory Natural, Social, Economic Environment:** There is an existing flooding problem in Basin DD. Based on discussions with Kawartha Conservation, there are no significant environmental features associated with Basin DD.

4. **Identify Impact of Alternative Solutions on the Environment and Mitigating Measures:** There are no significant negative impacts anticipated from an environmental, social or economic perspective as a result of the proposed drainage outlet and traffic designs. It is anticipated that the proposed alternatives will have a positive social and economic benefit on the community.

5. **Evaluate Alternative Options and Identify Recommended Solution:** Seven drainage outlet options were evaluated with consideration given to various economic, social and environmental factors using a decision matrix and the preferred option was determined. In addition, the preferred alternative was further refined following discussions with the City and the public to optimize construction costs and 6 variations of the preferred option were evaluated to select the overall best option. A number of traffic solutions were prepared including three conceptual intersection designs for the intersection of Veterans Way, North Street and the fairgrounds entrance.

6. **Consult Review Agencies and Public:** A public meeting was held on 24 September 2009 to present and discuss the drainage outlet and traffic alternatives and to solicit feedback and comments from the public and review agencies.

7. **Select Preferred Solution:** Based on the evaluation of options, a new drainage outlet located on North Street (Option 6B) using a storm sewer to be constructed along North Street and down Helen Street to adjacent the existing outfall at the Fenelon River located below the falls near Lindsay Street was selected as the preferred alternative. On site SWM requirements consist of the enhanced level of protection for water quality control and quantity control consists of allocated unit flow release rates approximately based on controlling the 100-yr peak flow to the 5-yr post-development flow. Regarding the

intersection improvements for traffic at the intersection of Veterans Way, North Street and the fairgrounds entrance, a roundabout design was selected as the preferred option.

The following summarizes the report recommendations:

1. Option 6B (shared outlet to North Street) should be incorporated as the preferred drainage outlet alternative based on the established selection criteria and evaluation.
2. The assumed development areas and land uses should be confirmed at the detailed design stage and revised as required. Assuming no changes to the preliminary assumptions, the SWM criteria should be implemented as follows:
    a. Water Quality – Enhanced level of protection for the identified development areas.
    b. Erosion Control – None required as proposed outfall is to lake system.
    c. Quantity Control – unit flow release rates (max. to 100-yr) should be applied based on allocated unit flow control targets that do not exceed the drainage outlet capacity as follows:
        i. Wright Development – 128.7 L/s/ha
        ii. Arena and Community Centre – 240.0 L/s/ha
        iii. Sugarbush Villas Development – 216.0 L/s/ha
        iv. North Street (assuming road improvements) – 167.4 L/s/ha
3. An estimated construction cost for the preferred drainage outlet option of $1,167,030 should be considered for preliminary budgeting purposes assuming no road improvements (i.e. curb and gutter) to North Street. An estimated construction cost of $1,416,630 should be considered for preliminary budgeting purposes assuming road improvements (i.e. curb and gutter) will be completed on North Street. Assuming cost sharing is implemented as per the preferred drainage outlet conceptual design and cost sharing analysis, the calculated cost share allocation for the City is $291,758 (City's share for outlet) + $116,703 (cost to upsize outlet to capture runoff associated with North St. road improvements) – $249,600 (cost of North St. road improvements) = $658,061. The ultimate cost share quantities may be further refined subject to further negotiations should the City pursue discussions with the other identified developers and prepare a cost sharing agreement.
4. Regarding traffic improvements, the two eastbound lanes at the Colborne Street & Francis Street should be converted to a combined left turn and through lane and a right turn only lane.
5. Advanced green phases should be implemented for the eastbound-to-northbound left turns and for the southbound-to-eastbound left turns at Colborne Street/Lindsay Street & Helen Street intersection.
6. The installation of fully-actuated traffic control signals at the Lindsay Street & Veterans Way intersection should be considered.
7. The North Street/Veterans Way & fair grounds access intersection should be reconstructed as a roundabout as part of the improvements associated with the construction of the arena and community centre. The preliminary cost estimate to construct the proposed roundabout is approximately $60,000.

8. Prior to construction of the proposed drainage outlet, it is recommended that the City meet with the identified developers to discuss cost sharing options, proceed with the detailed design of the preferred drainage outlet and obtain a detailed construction cost estimate prior to the preparation of tender documents.

9. If road improvements are considered for North Street, the City should consider any future needs regarding sanitary and water for the identified developments should opportunities exist to include any further required construction works while North Street is under construction for the proposed drainage outlet.

10 Based on field observations, in order to prevent the potential spill of stormwater from Lindsay Street to Basin DD via an existing driveway access, the City should consider extending the sidewalk located at the low point of the lot adjacent Home Hardware by approximately 20 m.

8.0 REFERENCES

Totten Sims Hubicki (TSH) Association Limited, *Storm Drainage Study, South Half, Village of Fenelon Falls*, December 1978.

TSH, *Stormwater Drainage Study 2004 Update – Phase II, Fenelon Falls and Immediate Area*, March 2005.

TSH, *Fenelon Falls Water Distribution System Model*. September 2007.

TSH, *City of Kawartha Lakes Storm Sewer System Inventory*.

TSH, *Fenelon Falls Wastewater Collection System Model*, September 2007.

Respectfully Submitted,
VALDOR ENGINEERING INC.

Bill Coffey, M.Sc., P.Eng.
Head of Water Resources

Chaodong Sheng, M.Sc., P.Eng.
Water Resources Engineer

This report was prepared by Valdor Engineering Inc. for the account of City of Kawartha Lakes. The comments, recommendations and material in this report reflect Valdor Engineering Inc.'s best judgment in light of the information available to it at the time of preparation. Any use of which a third party makes of this report, or any reliance on, or decisions made based on it, are the responsibility of such third parties. Valdor Engineering Inc. accepts no responsibility whatsoever for any damages, if any, suffered by any third party as a result of decisions made or actions based on this report.

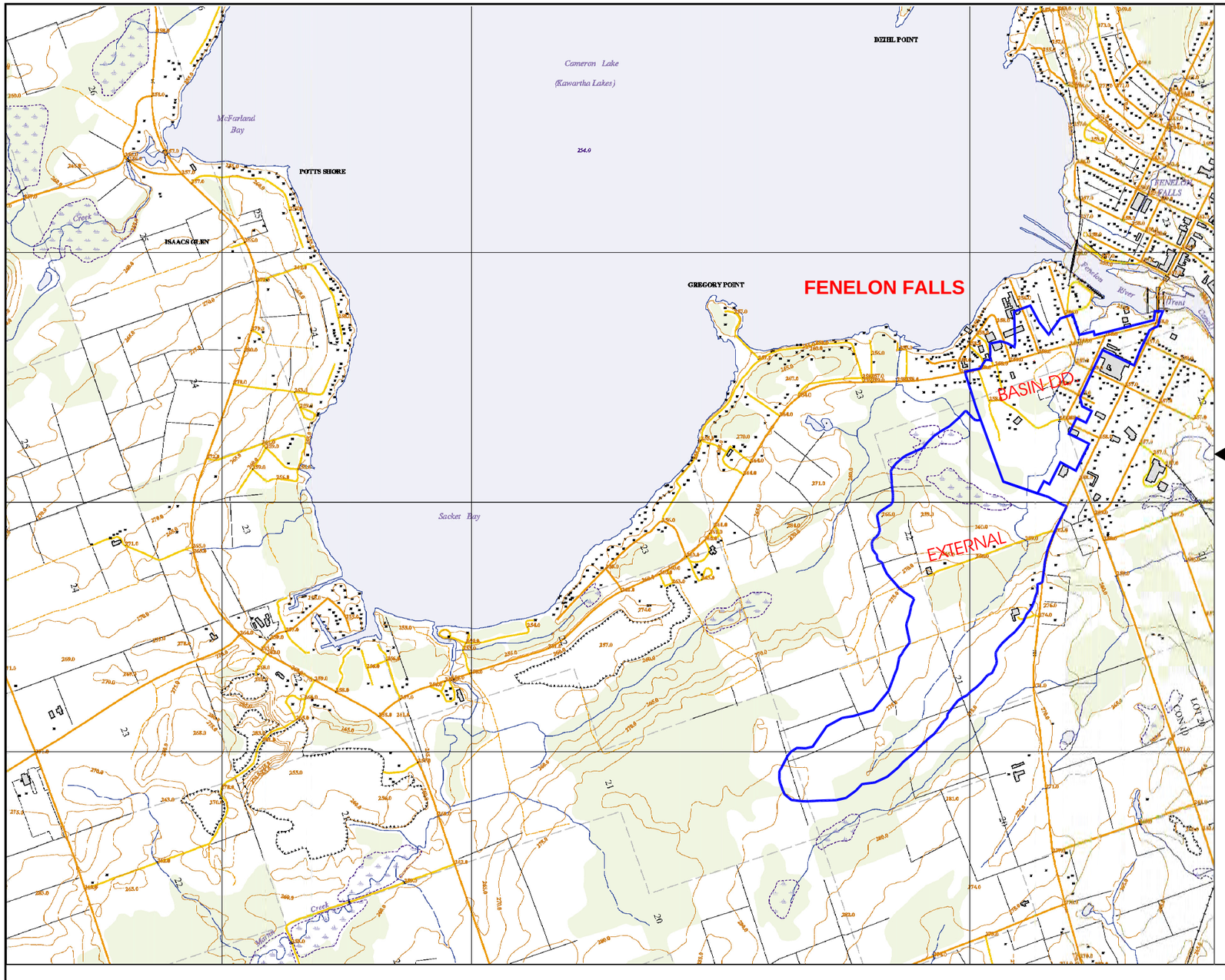

FIGURE 1 STUDY AREA LOCATION PLAN

FENELON FALLS DRAINAGE STUDY (BASIN DD)

LEGEND

DRAINAGE BOUNDARY

City of KAWARTHA LAKES
Catch the Kawartha spirit

VALDOR ENGINEERING INC.
Consulting Engineers - Project Managers
661 CHRISLEA ROAD, SUITE 11, WOODBRIDGE, ONTARIO, L4L 8A3
TEL (905)264-0054, FAX (905)264-0059 E-MAIL: info@valdor-engineering.com
www.valdor-engineering.com

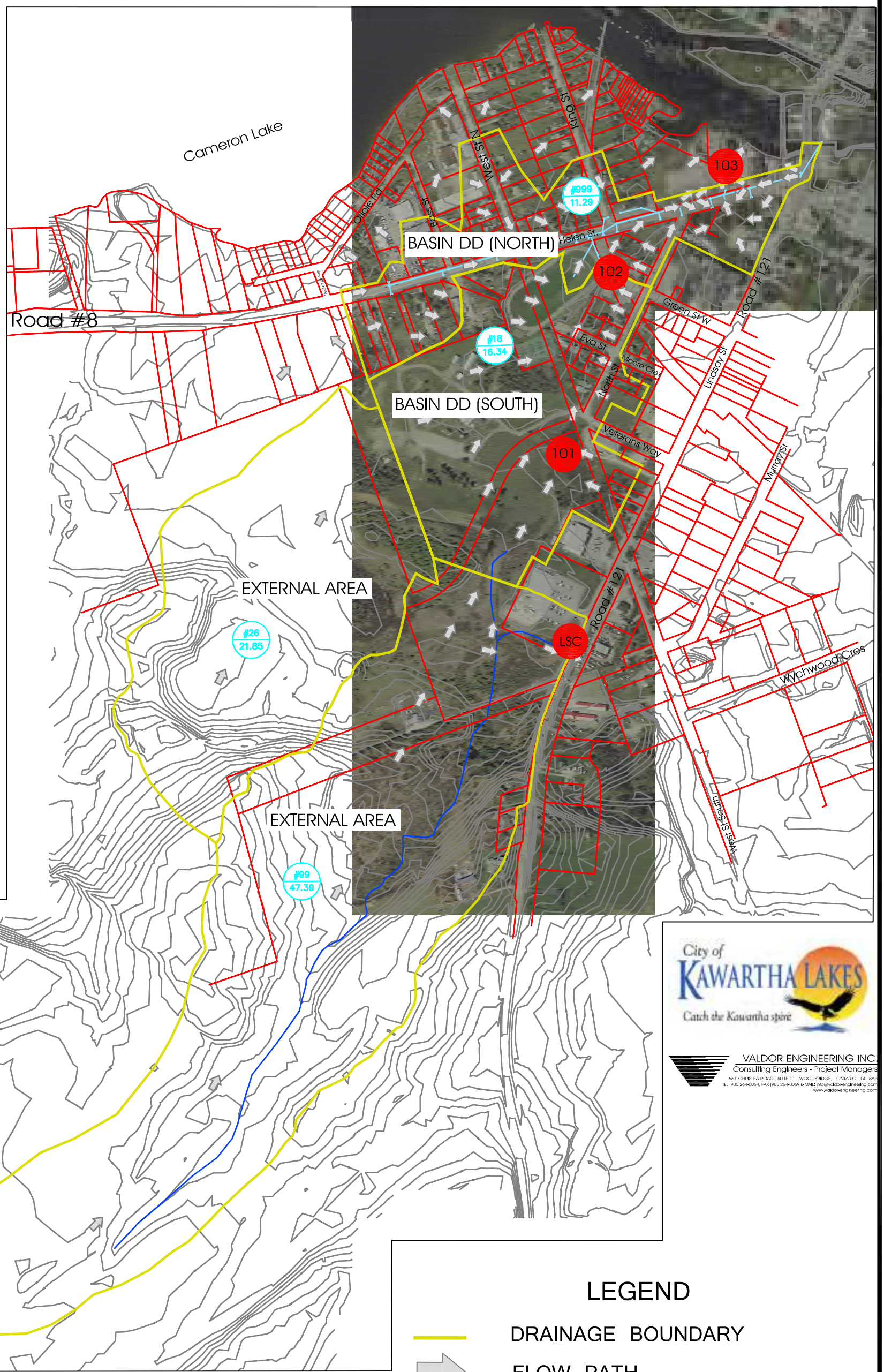

City of KAWARTHA LAKES
Catch the Kawartha spirit

VALDOR ENGINEERING INC.
Consulting Engineers - Project Managers
661 CHRISLEA ROAD, SUITE 11, WOODBRIDGE, ONTARIO, L4L 8A3
TEL (905)264-0054, FAX (905)264-0069 E-MAIL: info@valdor-engineering.com
www.valdor-engineering.com

LEGEND

- DRAINAGE BOUNDARY
- FLOW PATH
- #26 / 21.85 — PCSWMM (VO2) ID / AREA (ha)
- 101 — VO2 FLOW NODE

FIGURE 2: EXISTING DRAINAGE PLAN

FENELON FALLS DRAINAGE STUDY (BASIN DD)

This map is for information purposes only and Valdor Engineering Inc. (Valdor) takes no responsibility for, nor guarantees, the accuracy of the information contained within the map.

Prepared by Valdor: November 2009.

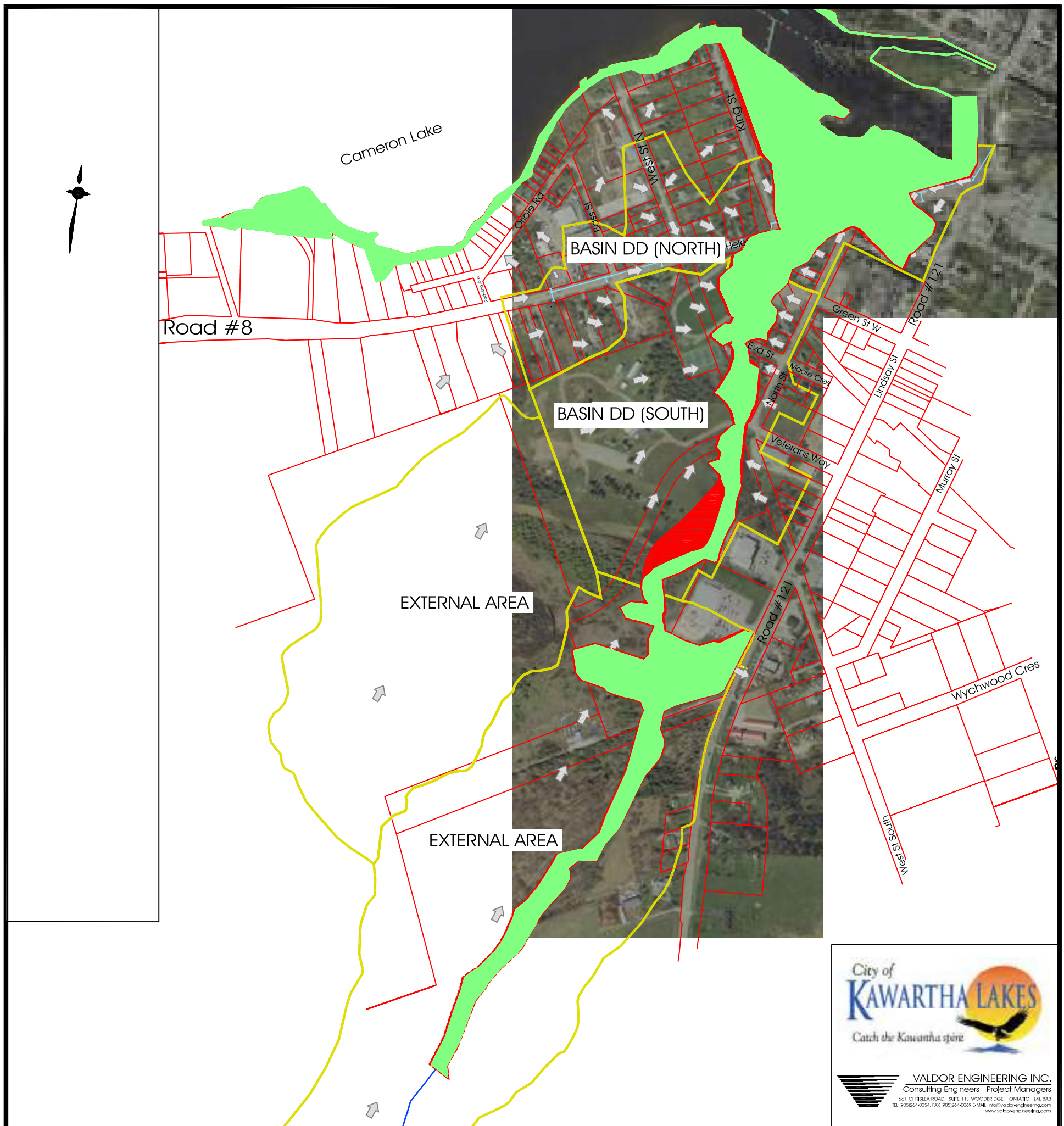

City of KAWARTHA LAKES
Catch the Kawartha spirit

VALDOR ENGINEERING INC.
Consulting Engineers - Project Managers
661 CHRISLEA ROAD, SUITE 11, WOODBRIDGE, ONTARIO, L4L 8A3
TEL (905)264-0054, FAX (905)264-0069 E-MAIL: info@valdor-engineering.com
www.valdor-engineering.com

LEGEND

- FLOW PATH
- DRAINAGE BOUNDARY
- PROBABLE FLOOD LIMIT (100-yr)
- PROBABLE FLOOD LIMIT (TIMMINS)
- PROPERTY BOUNDARY

FIGURE 3: PROBABLE FLOOD LIMITS

FENELON FALLS DRAINAGE STUDY (BASIN DD)

This map is for information purposes only and Valdor Engineering Inc. (Valdor) takes no responsibility for, nor guarantees, the accuracy of the information contained within the map.

Prepared by Valdor: November 2009.

S:\Projects\2009\09123\Drawings\Base_Map.dwg 9/23/2009 6:05:33 PM EDT

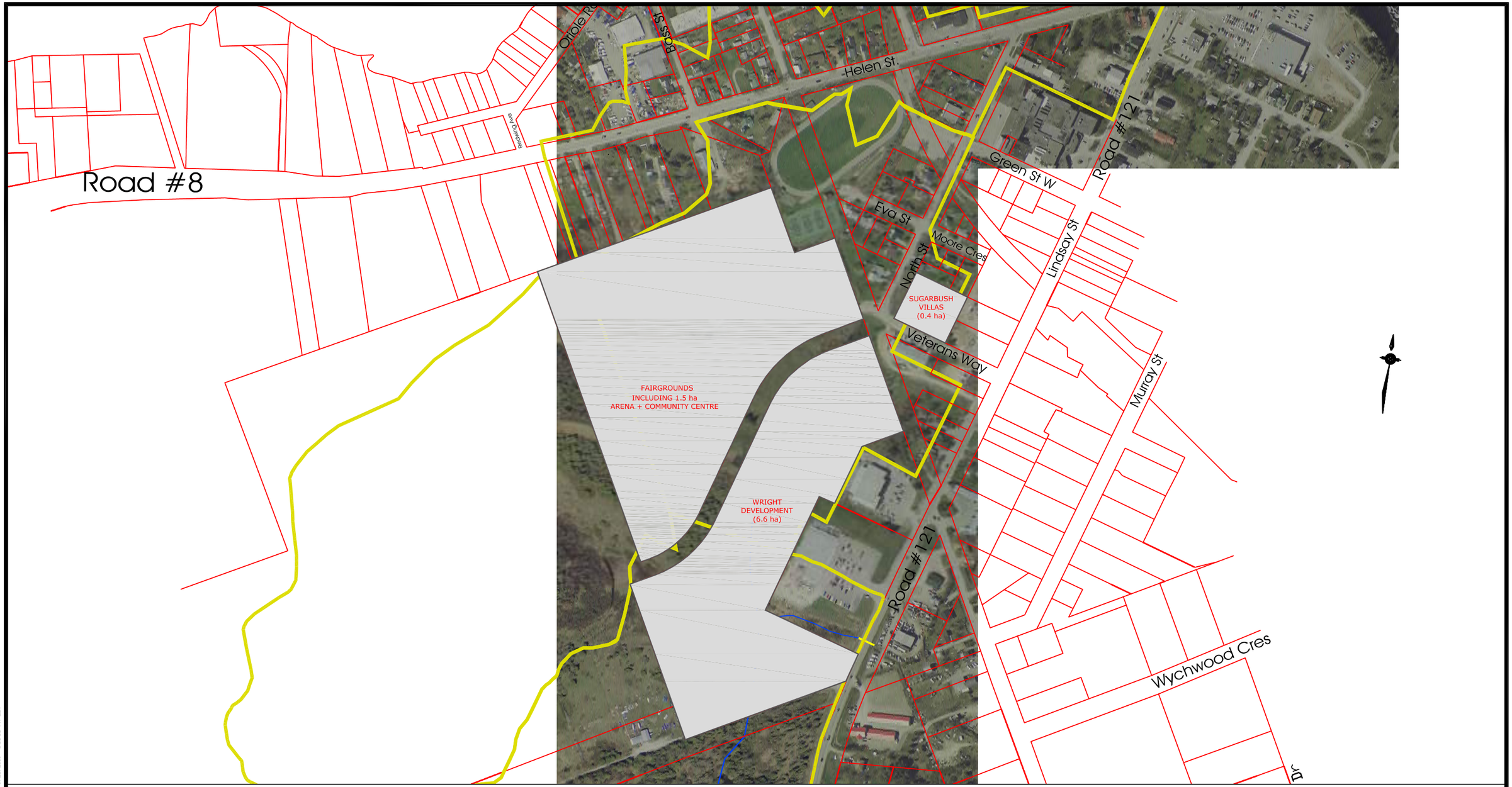

FIGURE 4 PROPOSED DEVELOPMENT AREAS

FENELON FALLS DRAINAGE STUDY (BASIN DD)

This map is for information purposes only and Valdor Engineering Inc. (Valdor) takes no responsibility for, nor guarantees, the accuracy of the information contained within the map.

Prepared by Valdor: November 2009.

LEGEND

- PROPERTY BOUNDARY
- PROPOSED DEVELOPMENT AREA
- DRAINAGE BOUNDARY

City of KAWARTHA LAKES
Catch the Kawartha spirit

VALDOR ENGINEERING INC.
Consulting Engineers - Project Managers
661 CHRISLEA ROAD, SUITE 11, WOODBRIDGE, ONTARIO, L4L 8A3
TEL (905)264-0054, FAX (905)264-0069 E-MAIL:info@valdorengineering.com
www.valdor-engineering.com

S:\Projects\2009\09123\Drawings\Base_Mapping 9/23/2009 6:35:33 PM EDT

OPTION 1: ON-LINE STORAGE AND FLOW CONTROL

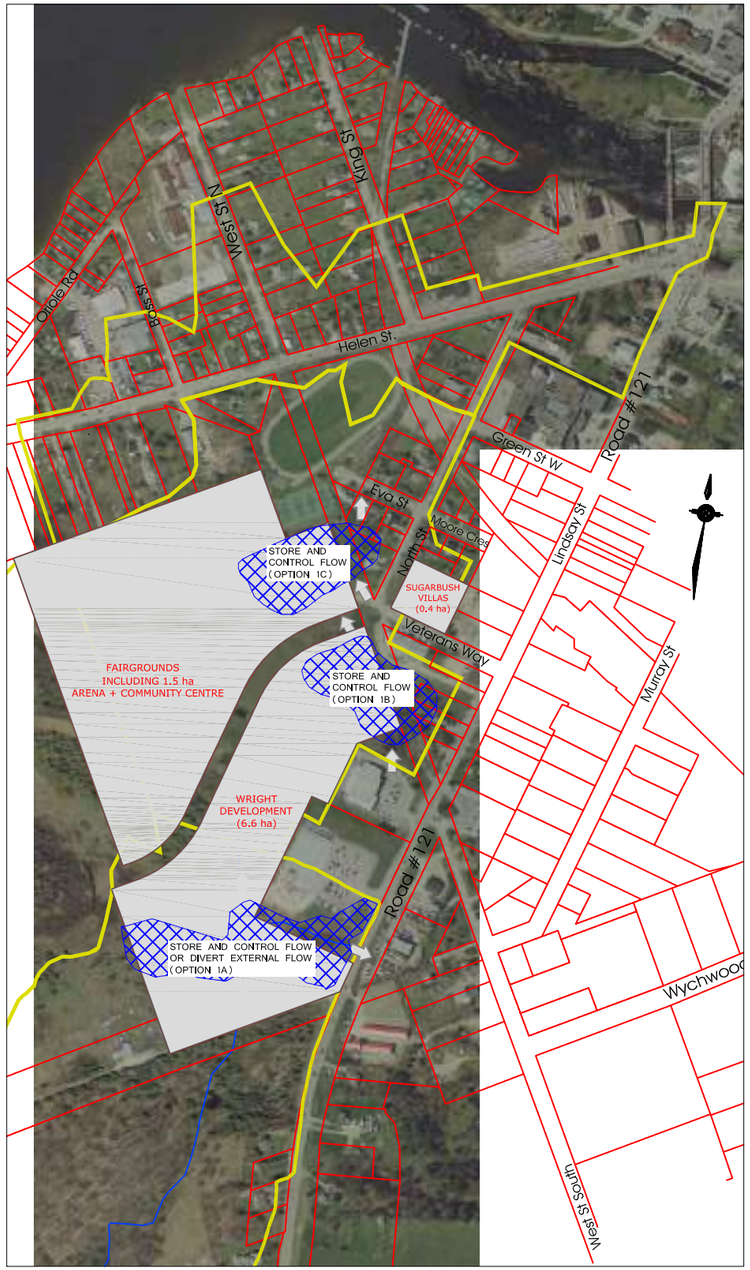

OPTION 2: ARENA OUTLET TO WEST STREET

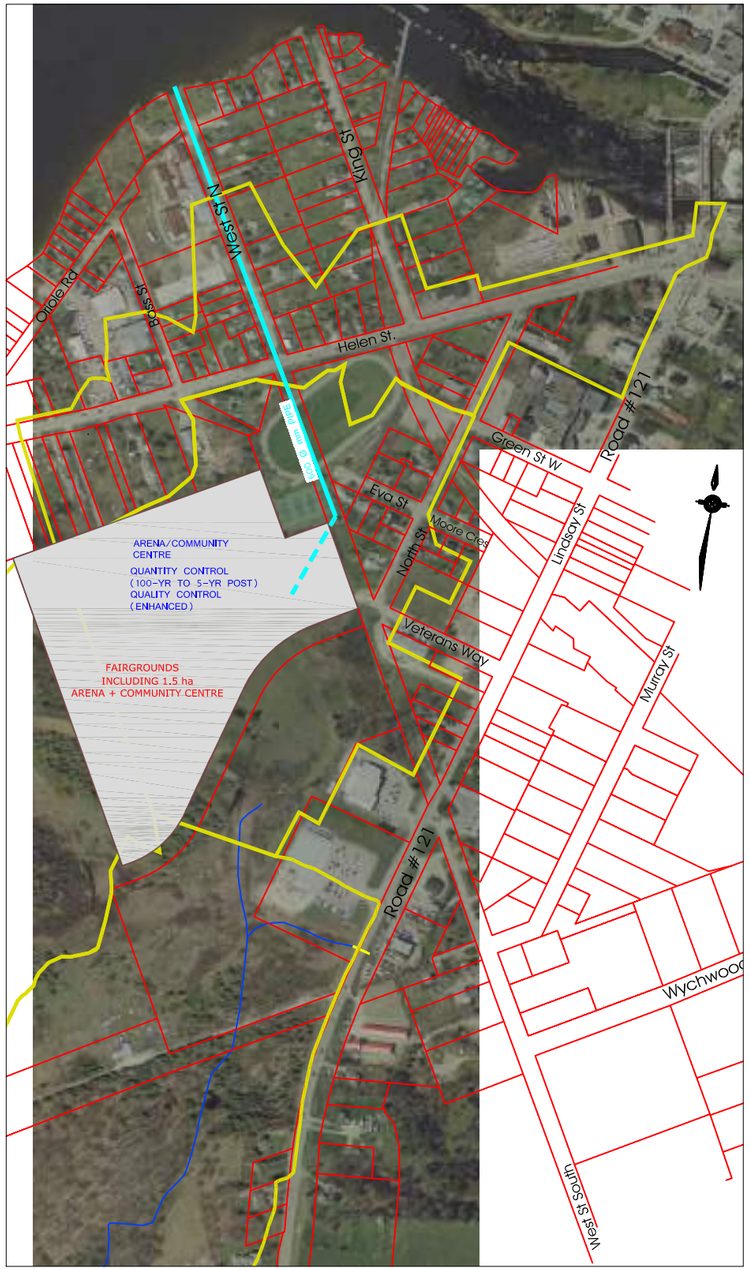

OPTION 3: ARENA OUTLET TO BASS STREET

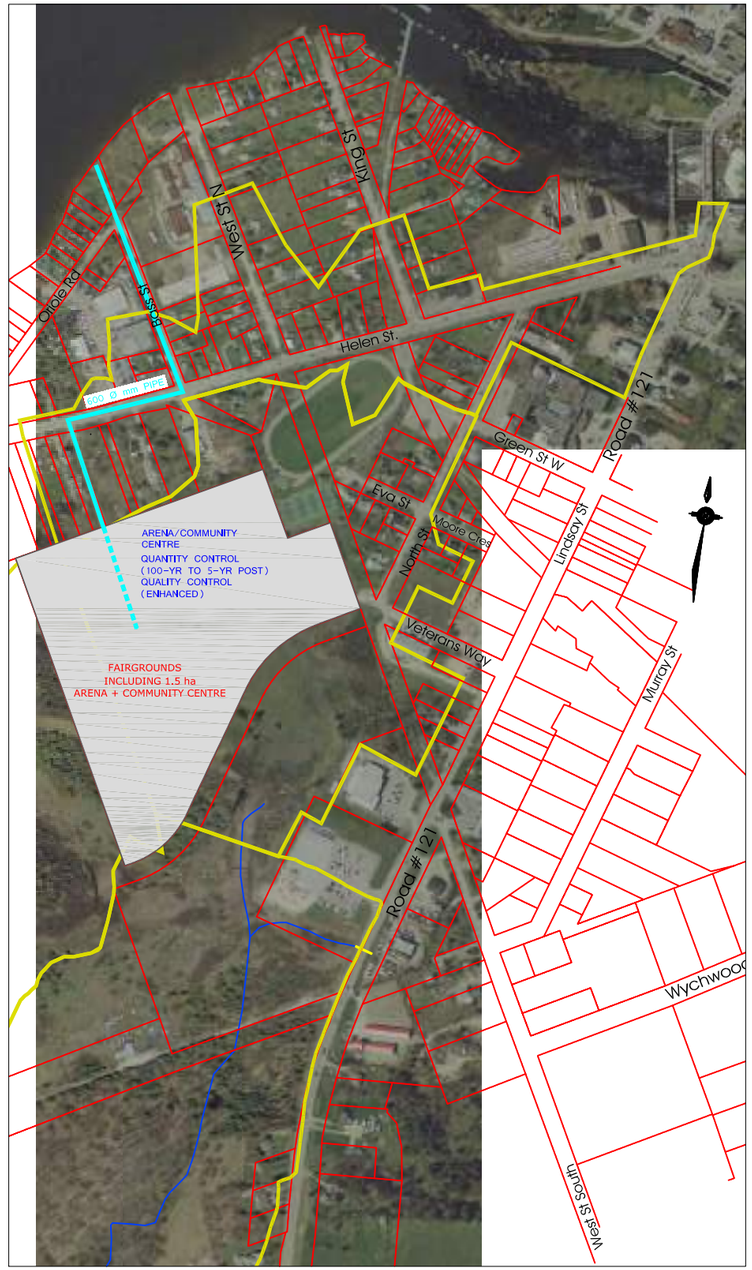

FIGURE 5: DRAINAGE OUTLET OPTIONS 1, 2 AND 3
FENELON FALLS DRAINAGE STUDY (BASIN DD)

This map is for information purposes only and Valdor Engineering Inc. (Valdor) takes no responsibility for, nor guarantees, the accuracy of the information contained within the map.

Prepared by Valdor: November 2009.

LEGEND

- PROPOSED STORM SEWER OUTLET
- DRAINAGE BOUNDARY
- PROPERTY BOUNDARY
- PROPOSED DEVELOPMENT AREA

City of KAWARTHA LAKES
Catch the Kawartha spirit

VALDOR ENGINEERING INC.
Consulting Engineers - Project Managers
661 CHRISLEA ROAD, SUITE 11, WOODBRIDGE, ONTARIO, L4L 8A3
TEL (905)264-0054, FAX (905)264-0069 E-MAIL: info@valdor-engineering.com
www.valdor-engineering.com

S:\Projects\2009\09123\Drawings\Base_Mapdwg 9/23/2009 6:35:33 PM EDT

OPTION 4: ARENA OUTLET TO HELEN STREET

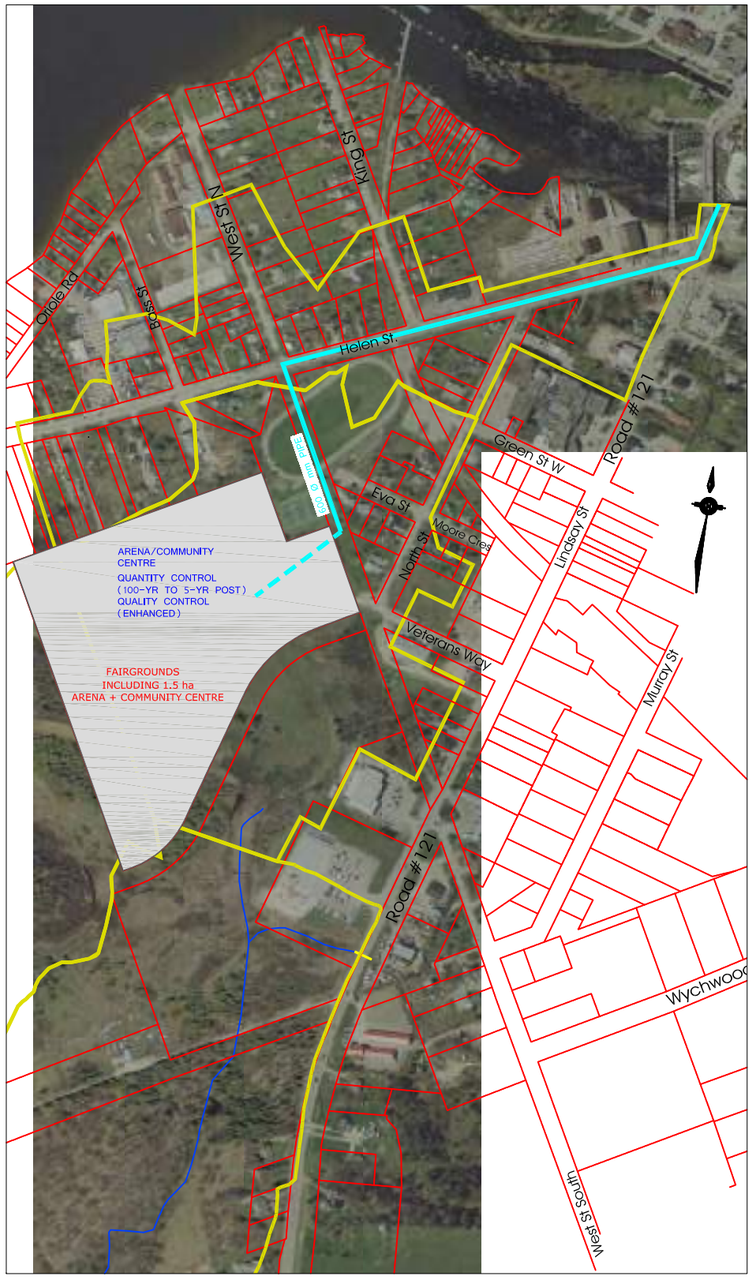

OPTION 5: ARENA OUTLET TO NORTH STREET

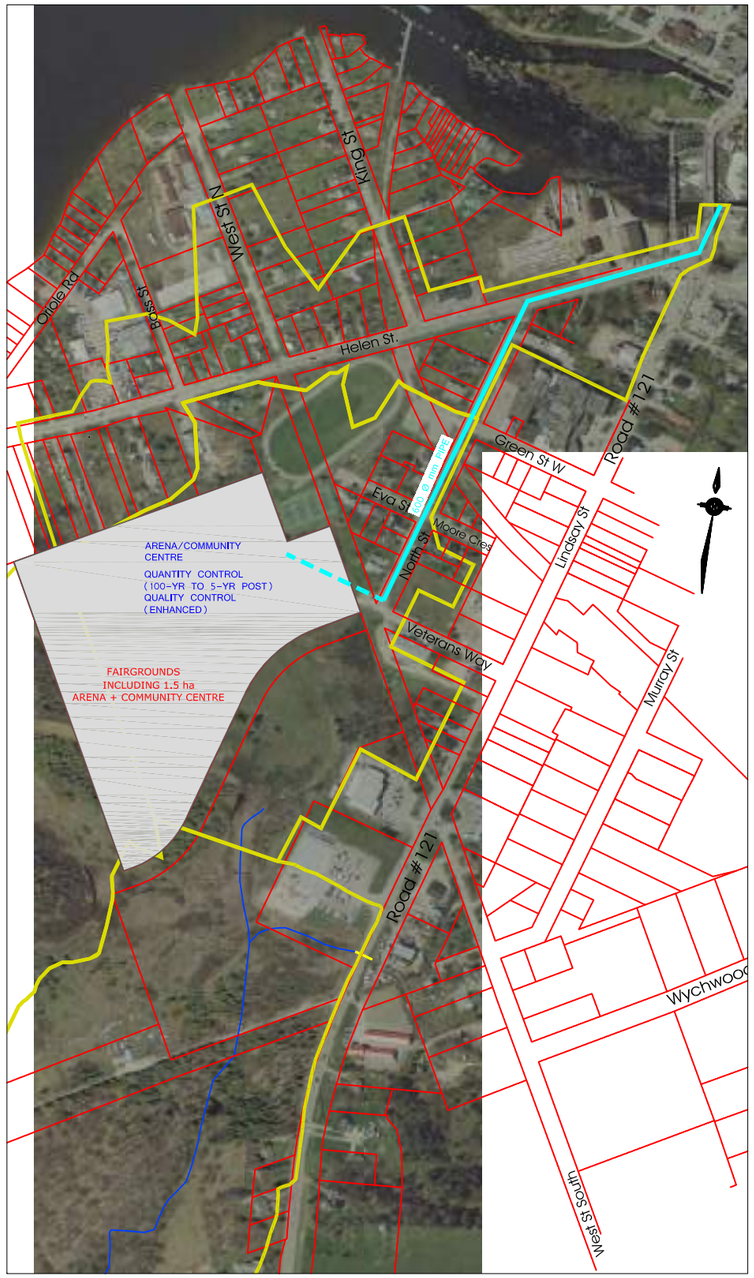

OPTION 6: SHARED OUTLET TO NORTH STREET (PREFERRED OPTION)

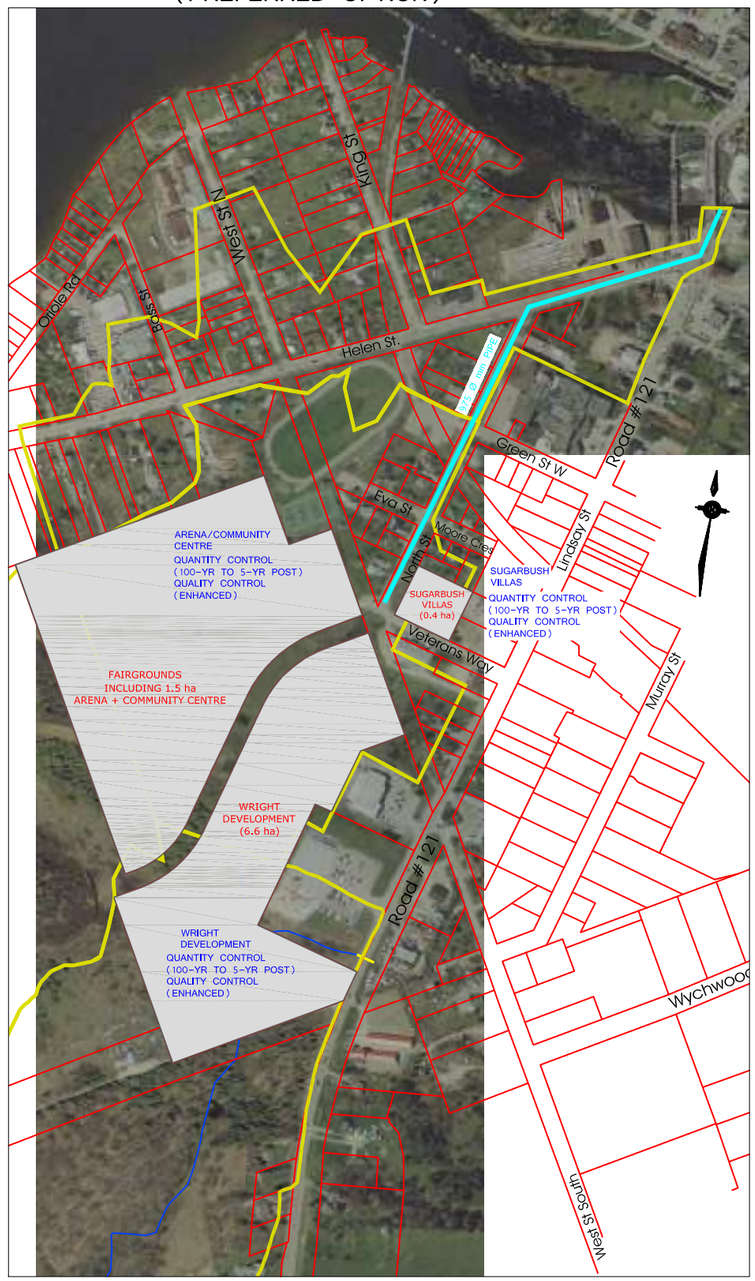

FIGURE 6: DRAINAGE OUTLET OPTIONS 4, 5 AND 6
FENELON FALLS DRAINAGE STUDY (BASIN DD)

This map is for information purposes only and Valdor Engineering Inc. (Valdor) takes no responsibility for, or guarantees, the accuracy of the information contained within the map.

Prepared by Valdor: November 2009.

LEGEND

- PROPOSED STORM SEWER OUTLET
- DRAINAGE BOUNDARY
- PROPERTY BOUNDARY
- PROPOSED DEVELOPMENT AREA

City of KAWARTHA LAKES
Catch the Kawartha spirit

VALDOR ENGINEERING INC.
Consulting Engineers - Project Managers
661 CHISLEA ROAD, SUITE 11, WOODBRIDGE, ONTARIO, L4L 8A3
TEL (905)264-0054, FAX (905)264-0069 E-MAIL: info@valdor-engineering.com
www.valdor-engineering.com

P:\Projects\08P\08P-8999\Drawings\Base Mapping 9-09.dwg 6/29/09 4:29:03 PM EDT

ALTERNATIVE 6A: SHARED OUTLET WITH 2-YR POST FLOW

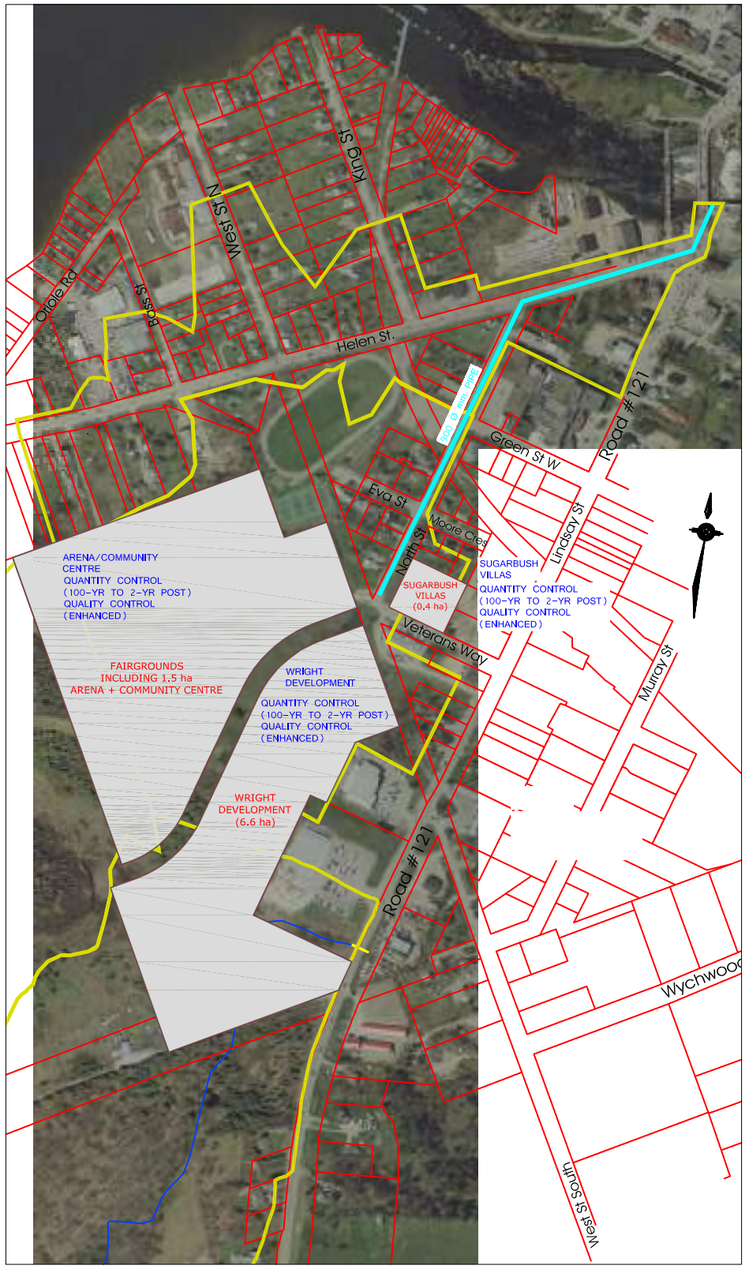

ALTERNATIVE 6B: SHARED OUTLET WITH 5-YR POST FLOW (PREFERRED ALTERNATIVE)

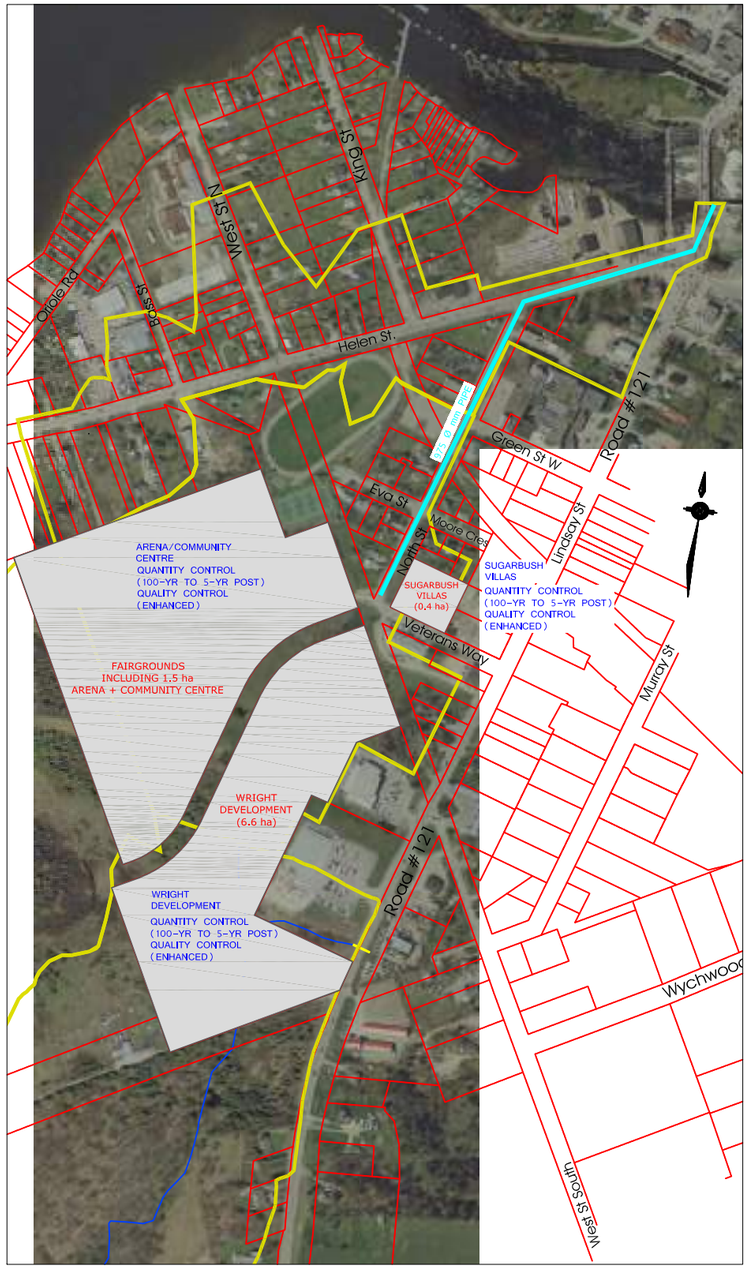

ALTERNATIVE 6C: ARENA OUTLET WITH 2-YR POST FLOW

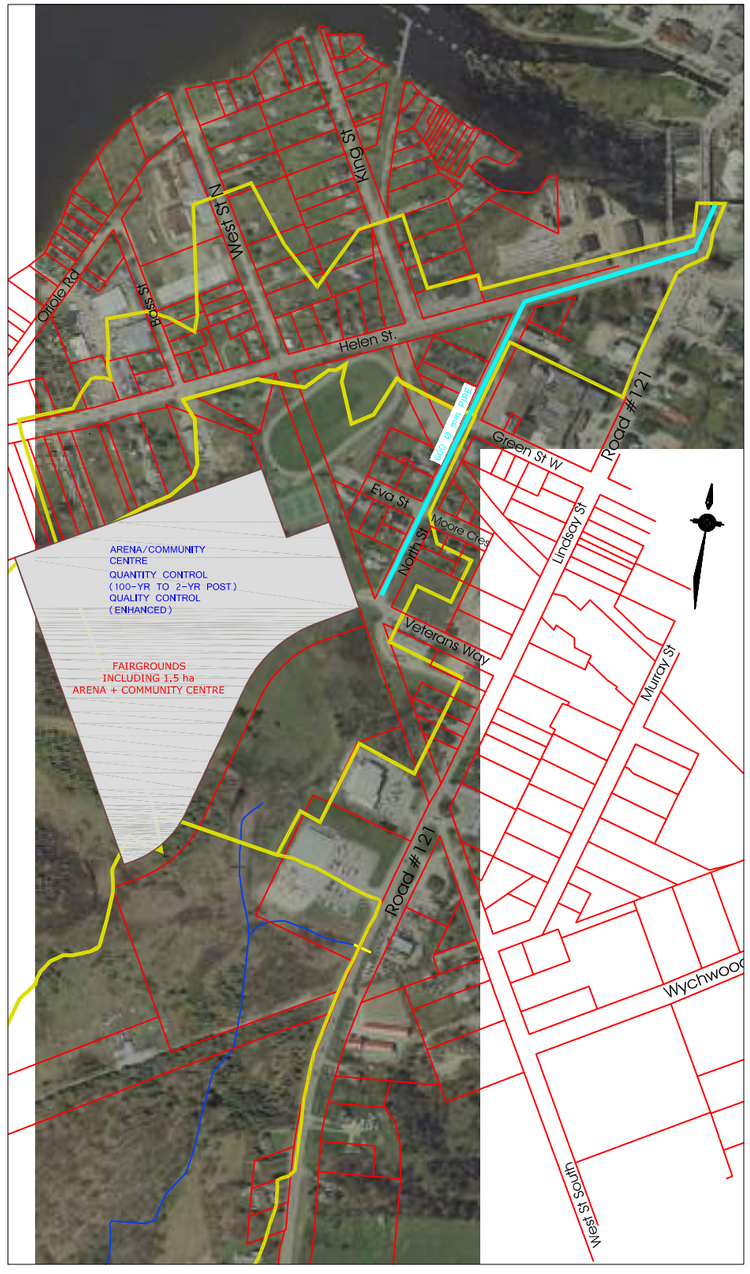

FIGURE 7: DRAINAGE OUTLET OPTIONS 6A, 6B AND 6C
FENELON FALLS DRAINAGE STUDY (BASIN DD)

LEGEND

- PROPOSED STORM SEWER OUTLET
- DRAINAGE BOUNDARY
- PROPERTY BOUNDARY
- PROPOSED DEVELOPMENT AREA

This map is for information purposes only and Valdor Engineering Inc. (Valdor) takes no responsibility for, nor guarantees, the accuracy of the information contained within the map.

Prepared by Valdor: November 2009.

City of KAWARTHA LAKES
Catch the Kawartha spirit

VALDOR ENGINEERING INC.
Consulting Engineers - Project Managers
661 CHRISLEA ROAD, SUITE 11, WOODBRIDGE, ONTARIO, L4L 8A3
TEL (905)264-0054, FAX (905)264-0069 E-MAIL:info@valdor-engineering.com
www.valdor-engineering.com

S:\Projects\2005\05123\Drawings\Base Mapping 9/23/2009 6:25:53 PM EST

ALTERNATIVE 6D: ARENA OUTLET WITH 5-YR POST FLOW

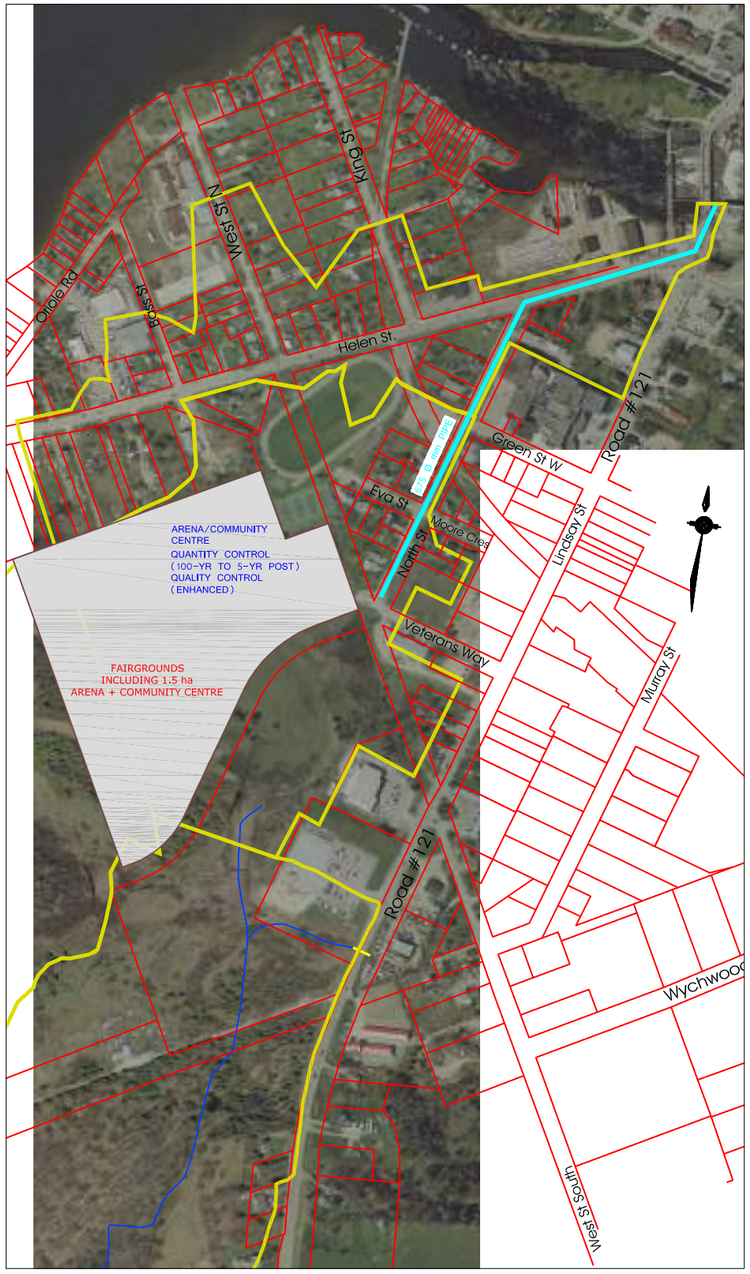

ALTERNATIVE 6E: ARENA OUTLET WITH 2-YR POST FLOW + UPGRADING SEWER UNDER HELEN STREET

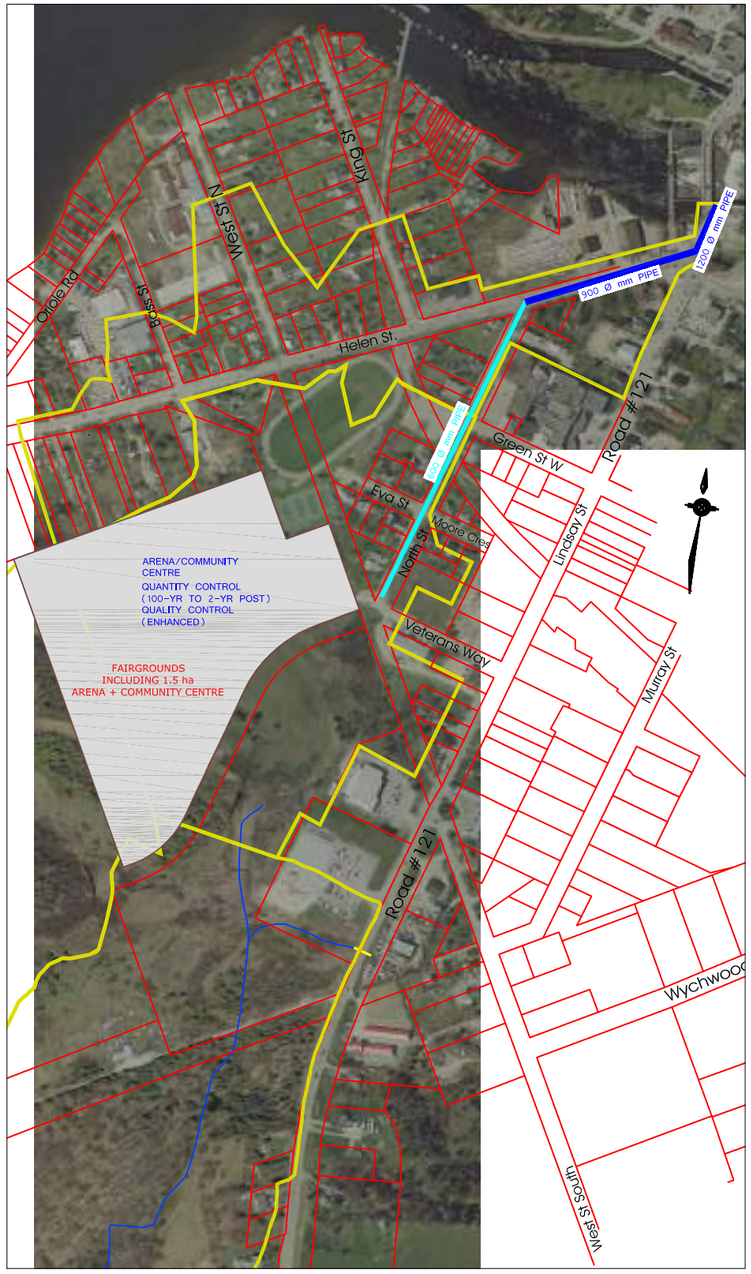

ALTERNATIVE 6F: SHARED OUTLET WITH 5-YR POST FLOW + UPGRADING SEWER UNDER HELEN STREET

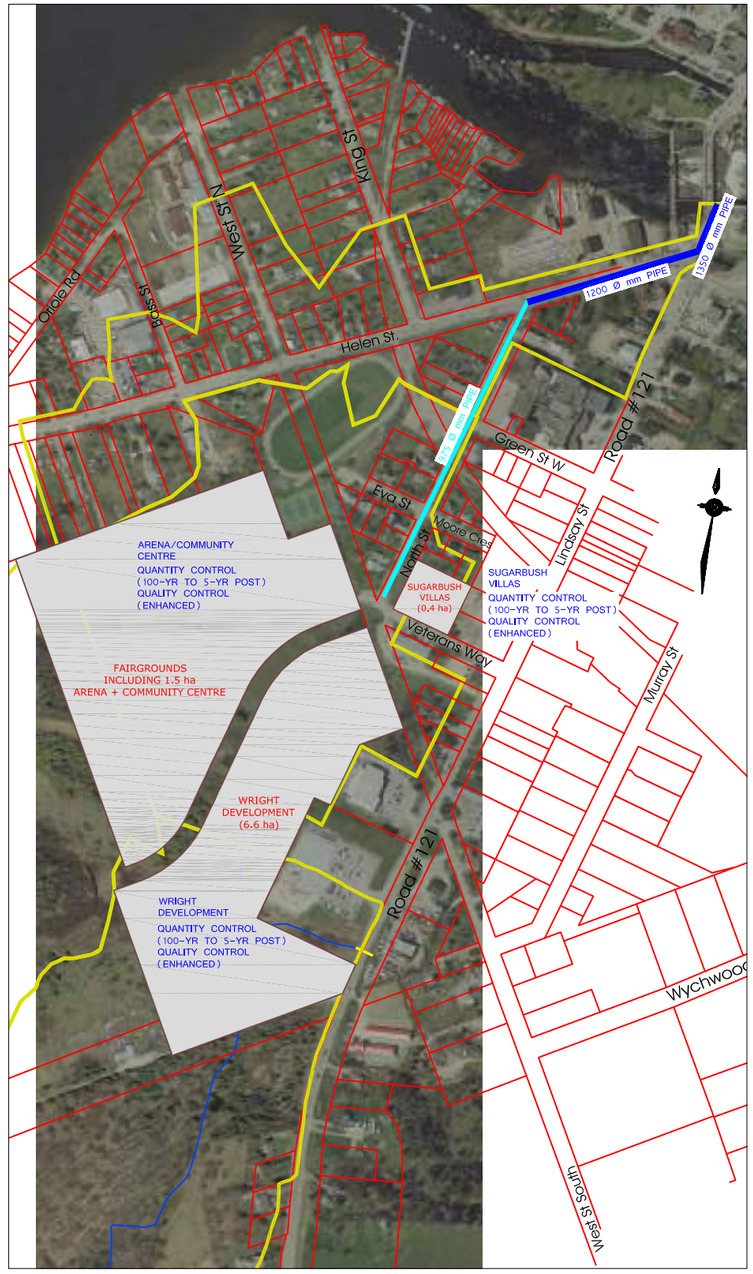

FIGURE 8: DRAINAGE OUTLET OPTIONS 6D, 6E AND 6F
FENELON FALLS DRAINAGE STUDY (BASIN DD)

LEGEND

- PROPOSED STORM SEWER OUTLET
- DRAINAGE BOUNDARY
- PROPERTY BOUNDARY
- PROPOSED DEVELOPMENT AREA
- PROPOSED STORM SEWER REPLACEMENT

This map is for information purposes only and Valdor Engineering Inc. (Valdor) takes no responsibility for, nor guarantees, the accuracy of the information contained within the map.

Prepared by Valdor: November 2009.

City of KAWARTHA LAKES
Catch the Kawartha spirit

VALDOR ENGINEERING INC.
Consulting Engineers - Project Managers
661 CHRISLEA ROAD, SUITE 11, WOODBRIDGE, ONTARIO, L4L 8A3
TEL (905)264-0064, FAX (905)264-0069 E-MAIL: info@valdor-engineering.com
www.valdor-engineering.com

S:\Projects\2009\09123\Drawings\Base_Mapping 9/23/2009 6:28:33 PM EDT

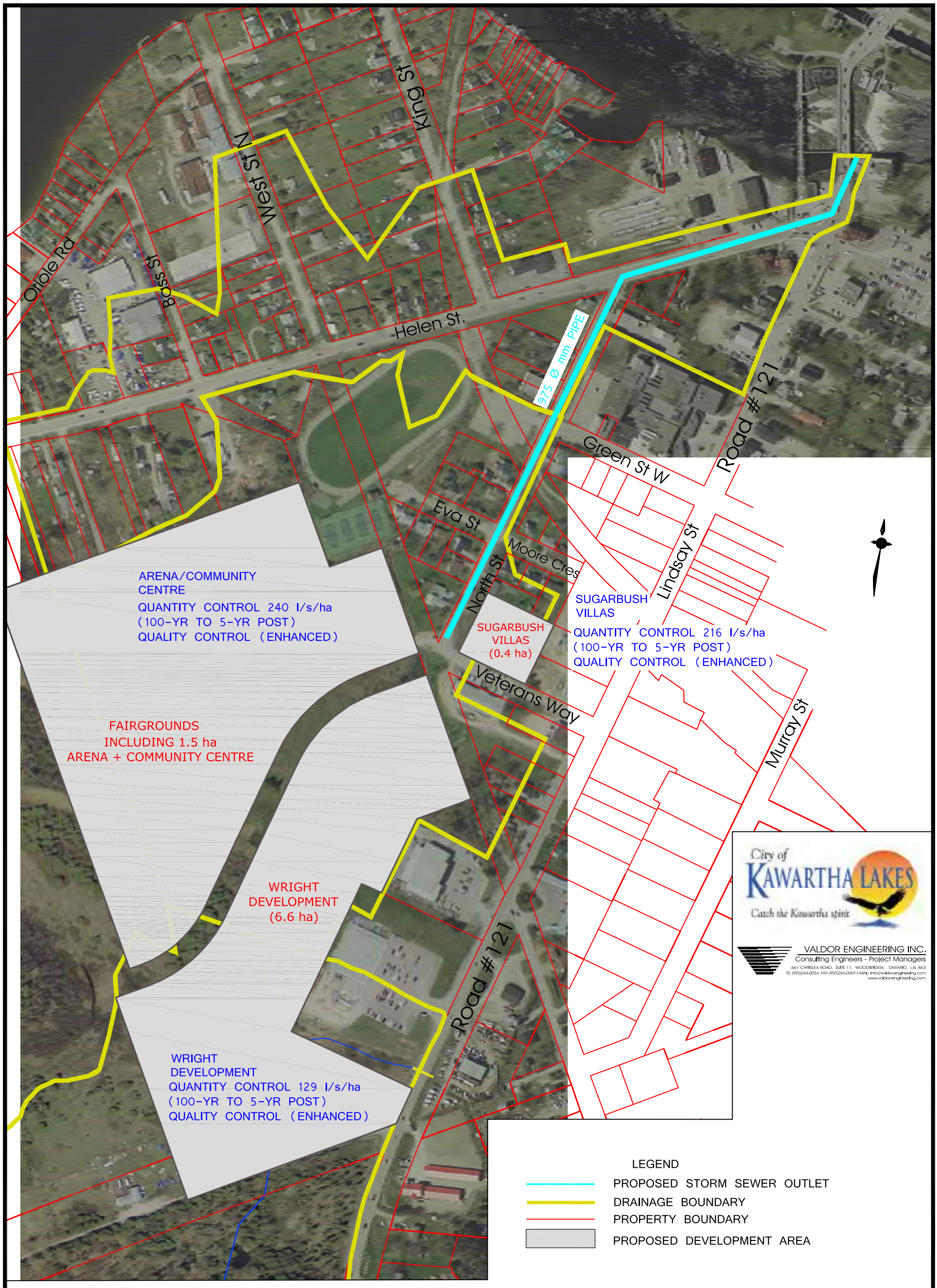

FIGURE 9 PREFERRED DRAINAGE OUTLET OPTION

OUTLET ON NORTH STREET TO SERVICE ARENA + OTHER CURRENTLY IDENTIFIED DEVELOPMENT SITES

FENELON FALLS DRAINAGE STUDY (BASIN DD)

This map is for information purposes only and Valdor Engineering Inc. (Valdor) takes no responsibility for, nor guarantees, the accuracy of the information contained within the map.

Prepared by Valdor: November 2009.

S:\Projects\2009\09123\Drawings\Base_Map.dwg 9/23/2009 6:35:33 PM EDT

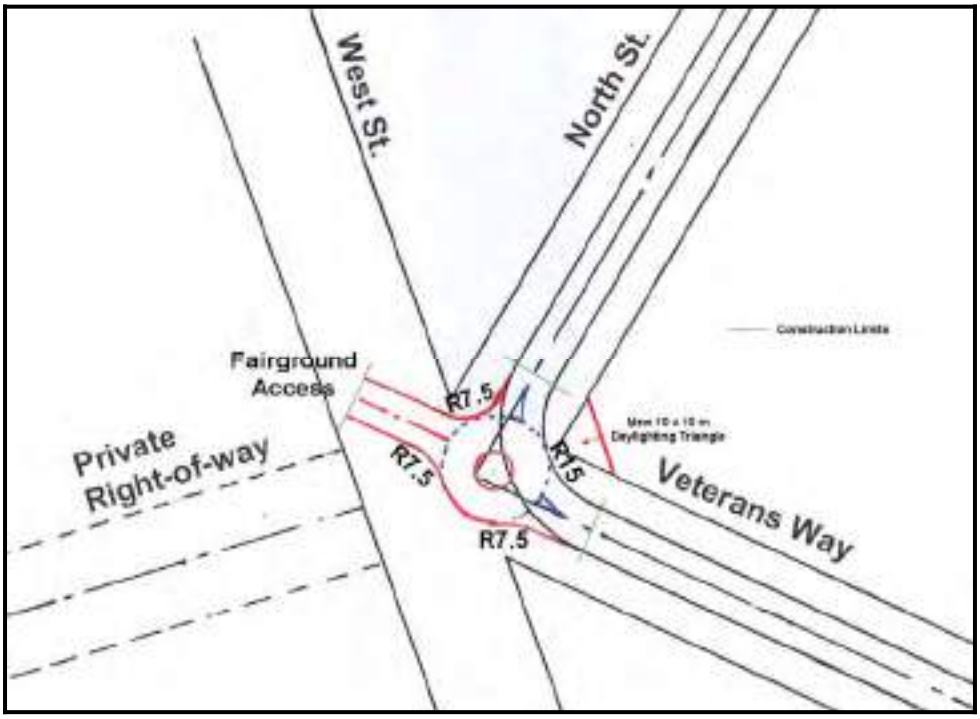

FIGURE 10: Preferred Intersection Option (Roundabout)

VALDOR ENGINEERING INC.

File: 09123

November 2009

Table 1: Evaluation and Ranking Summary for the Initial Drainage Outlet Options

Selection Criteria		List Alternatives						
		Do Nothing	*1*	*2*	*3*	*4*	*5*	*6*
Cost of Construction	**[1]NPV**	0.25	0.25	0.25	0.25	0.25	0.25	0.25
	Rank	1	7	3	4	5	4	6
Opportunity for Cost Sharing	**NPV**	0.25	0.25	0.25	0.25	0.25	0.25	0.25
	Rank	1	3	4	5	7	6	2
Social and Economic Benefits	**NPV**	0.20	0.20	0.20	0.20	0.20	0.20	0.20
	Rank	7	2	4.5	4.5	4.5	4.5	1
Contribution to Alleviating the Existing Flooding Problem	**NPV**	0.15	0.15	0.15	0.15	0.15	0.15	0.15
	Rank	7	1	5	5	5	5	2
Impact on the Environment	**NPV**	0.10	0.10	0.10	0.10	0.10	0.10	0.10
	Rank	1	7	4	4	4	4	2
Ease of Implementation	**NPV**	0.05	0.05	0.05	0.05	0.05	0.05	0.05
	Rank	1	7	4.5	4.5	4.5	4.5	2
Total Weighted Score		3.10	4.10	4.03	4.53	5.28	4.78	2.80
Priority		**2**	**4**	**3**	**5**	**7**	**6**	**1**

Note: 1 -- NPV: Normalized Priority Value

VALDOR ENGINEERING INC.

File: 09123

November 2009

Table 2: Evaluation and Ranking Summary for the Refined Drainage Outlet Options

Selection Criteria		List Alternatives					
		6A	6B	6C	6D	6E	6F
Cost of Construction	**[1]NPV**	0.25	0.25	0.25	0.25	0.25	0.25
	Rank	4	5	1	2	3	6
Opportunity for Cost Sharing	**NPV**	0.25	0.25	0.25	0.25	0.25	0.25
	Rank	1	1	5	5	5	1
Social and Economic Benefits	**NPV**	0.20	0.20	0.20	0.20	0.20	0.20
	Rank	2	1	6	5	4	3
Contribution to Alleviating the Existing Flooding Problem	**NPV**	0.15	0.15	0.15	0.15	0.15	0.15
	Rank	2	1	4	3	6	5
Impact on the Environment	**NPV**	0.10	0.10	0.10	0.10	0.10	0.10
	Rank	4	3	2	1	5	6
Ease of Implementation	**NPV**	0.05	0.05	0.05	0.05	0.05	0.05
	Rank	4	5	1	2	3	6
Total Weighted Score		2.55	2.40	3.55	3.40	4.35	4.00
Priority		**2**	**1**	**4**	**3**	**6**	**5**

Note: 1 -- NPV: Normalized Priority Value

VALDOR ENGINEERING INC.

File: 09123

November 2009

Table 3: Refined Drainage Outlet Options - Advantages, Disadvantages and Estimated Cost

Fenelon Falls Drainage Study (Basin DD)

Alternatives	Design Criteria for the Proposed Development	Description	Extent of Service Provided with Proposed Storm Sewer Outlet	Advantages	Disadvantages	Preferred Option	Total Cost (incl. 20% Contingency) *(assuming full road repair to North Street)*
6A	100-yr post dev. Q_p controlled to 2-yr post dev. Q_p	New 900 mm pipe for North St. and Helen St. and the outlet pipe	• Arena + Community Centre (1.5 ha) • Sugarbush Villas (0.4 ha) • Wright development (6.6 ha) • North Street (0.86 ha)	• Enables cost sharing which minimizes ultimate cost for all 3 developers • Cost is less than that required to convey 5-yr post peak flow • Provides improvement for existing flooding issue by directing portion of total flow away from the existing flood prone areas • Provides a dedicated outlet for proposed developments with no uncertainty regarding capacity	• Total required up-front cost higher than for Arena alone • Increased on-site SWM quantity control requirements compared to outlet sized for the 5-yr peak flow		**$1,086,516 to $1,336,116**
6B	100-yr post dev. Qp controlled to 5-yr post dev. Qp	New 975 mm pipe for North St. and Helen St. and the outlet pipe		• Enables cost sharing which minimizes ultimate cost for all 3 developers • Reduced on-site SWM quantity control requirements compared to outlet sized for the 2-yr peak flow • Provides improvement for existing flooding issue by directing portion of total flow away from the existing flood prone areas • Provides a dedicated outlet for proposed developments with no uncertainty regarding capacity	• Total required up-front cost higher than for Arena alone	√	**$1,167,030 to $1,416,630**
6C	100-yr post dev. Qp controlled to 2-yr post dev. Qp	New 600 mm pipe for North St. and Helen St. and outlet pipe assuming road improvements (C+G) to North Street *New 525 mm pipe for North St. and Helen St. and the outlet pipe assuming NO road improvements (C+G) to North Street*	• Arena + Community Centre (1.5 ha) • *North Street (0.86 ha) included for C+G improvements to North Street (i.e., full repair condition only)*	• Total required up-front cost lower than for all 3 developments • Some improvement to existing flooding issue (but less than that for Option 6A and 6B) • Cost is less than that required to convey 5-yr post peak flow • Provides a dedicated outlet for proposed developments with no uncertainty regarding capacity	• Does not enable reduced cost through cost sharing • No significant improvement for existing flooding issue since amount of flow directed away from existing flood prone areas is minimal • Increased on-site SWM quantity control requirements compared to outlet sized for the 5-yr peak flow		**$709,250 to $1,024,795**
6D	100-yr post dev. Qp controlled to 5-yr post dev. Qp	New 675 mm pipe for North St. and Helen St. and outlet pipe assuming road improvements (C+G) to North Street *New 600 mm pipe for North St. and Helen St. and the outlet pipe assuming NO road improvements (C+G) to North Street*		• Total required up-front cost lower than for all 3 developments • Some improvement to existing flooding issue (but less than that for Option 6A and 6B) • Reduced on-site SWM quantity control requirements compared to outlet sized for the 2-yr peak flow • Provides a dedicated outlet for proposed developments with no uncertainty regarding capacity	• Does not enable reduced cost through cost sharing • No significant improvement for existing flooding issue since amount of flow directed away from existing flood prone areas is minimal		**$775,195 to $1,093,807**
6E	100-yr post dev. Qp controlled to 2-yr post dev. Qp	New 600 mm pipe for North St. and replace with 900 mm pipe for Helen St. and with 1200 mm pipe to the outlet pipe assuming road improvements (C+G) to North Street *New 525 mm pipe for North St. and replace with 900 mm pipe for Helen St. and with 1200 mm pipe to the outlet pipe assuming NO road improvements (C+G) to North Street*	• Arena + Community Centre (1.5 ha) • *North Street (0.86 ha) included for C+G improvements to North Street (i.e., full repair condition only)*	• Total required up-front cost lower than for all 3 developments • Cost is less than that required to convey 5-yr post peak flow • Less rock excavation required	• Does not enable reduced cost through cost sharing • Larger storm pipe required • Increased on-site SWM quantity control requiremenmts compared to outlet sized for the 5-yr peak flow • Impacts to existing flooding issue unclear due to limited information and uncertainty in flow capture rates • ICD's may be required to control flow captured by the existing storm sewer system to ensure that outlet capacity for proposed development is not compromised which could worsen existing flooding issues		**$896,626 to $1,183,997**
6F	100-yr post dev. Qp controlled to 5-yr post dev. Qp	New 975 mm pipe for North St. and replace with 1200 mm pipe for Helen St. and with 1350 mm pipe for the outlet pipe	• Arena + Community Centre (1.5 ha) • Sugarbush Villas (0.4 ha) • Wright development (6.6 ha) • North Street (0.86 ha)	• Enables cost sharing which minimizes ultimate cost for all 3 developers • Reduced on-site SWM quantity control requirements compared to outlet sized for the 2-yr peak flow • Less rock excavation required	• Larger storm pipe required • Impacts to existing flooding issue unclear due to limited information and uncertainty in flow capture rates • ICD's may be required to control flow captured by the existing storm sewer system to ensure that outlet capacity for proposed developments is not compromised which could worsen existing flooding issues		**$1,364,010 to $1,613,610**

Notes:

1 -- The estimated costs include 20% contingency and excludes engineering fees, contract administration and inspections.

2 -- Includes material cost, labor and rock excavation; excludes cost to relocate misc. existing underground infrastructure/services and land acquisition if required. Cost of storm outlet is based on assumed development area and land use as per discussions with the City.

3 -- Rock excavation estimated based on minimum cover requirement (1.2 m) and 0.5% assumed slope for storm sewer; Option 6A, 6B, 6C and 6D costs assume drop structure and additional rock excavation required to clear Lindsay St. storm sewer.

4 -- It is assumed that existing sanitary, water and other misc. services can be cleared with the proposed storm sewer installation.

5 -- For Alternative 6A, 6B and 6C, it is assumed that local drainage on North Street will continue to be conveyed by the existing roadside ditch for the "partial repair" condition.

6 -- For the "full repair" condition, it is assumed that drainage from North Street up to the 2-yr storm will be collected in catchbasins and conveyed by the proposed North Street storm sewer.

Table 4: Cost Sharing Analysis - Identifed Proposed Developments, Proposed Shared Outlet, Basin DD, Fenelon Falls

Development	Area (ha)	Total IMP (%)	Level of Peak Flow Control	Peak Flow (m^3/s)	[2]% Contrib. Based on VO2 (%)	Assigned % Peak Flow Allocation (%)	Allocated Peak Flow Contrib. (m^3/s)	[5]Allocated Unit Flow Control Target (L/s/ha)	[3]Unit Cost Share Allocation ($/ha)	[3]Total Cost Share Allocation ($)
Wright	6.6	50.0	5-yr post-dev	0.85	59.0%	59.0%	0.85	128.7	$104,325	$688,548
Arena + Community Centre	1.5	90.0	5-yr post-dev	0.36	25.0%	25.0%	0.36	240.0	$194,505	$291,758
Sugarbush Villas	0.4	80.0	5-yr post-dev	0.09	6.3%	6.0%	0.09	216.0	$175,055	$70,022
[4]North Street	0.86	80.0	2-yr post-dev	0.14	9.7%	10.0%	0.14	167.4	$135,701	$116,703
North Street Road Improvements	[1]n/a	n/a	n/a	n/a	n/a	n/a	n/a	n/a	n/a	$249,600
TOTAL	9.36	60.4	2-yr to 5-yr	1.44	100.0%	100.0%	1.44	153.8	$124,683	$1,416,630

Notes:

$1,167,030 = Estimated Total Cost for Outlet ONLY (i.e. partial road repair)

1. n/a - not applicable
2. Percent peak flow contribution based on hydrologic modeling using Visual OTTHYMO (VO2) and development assumptions as per discussions with the City.
3. Cost share allocation calculated assuming North Street road improvement costs to be borne by the City.
4. It is assumed that should full road repair (i.e. curb and gutter) be completed on North Street, the cost to convey additional drainage would be borne by the City.
5. Allocated unit flow targets are calculated based on assumptions for area and land use and are to be applied to each identified development to ensure outlet capacity compliance.

APPENDIX "A"

Site Survey, Field Inspections and Supporting Documentation

Fenelon Falls Drainage Study (Basin DD)
and Traffic Impact Study

City of Kawartha Lakes

VALDOR ENGINEERING INC.
File: 09123
November 2009

Table A.1: [1]Helen Street Sewer Pipe Inventory Sheet

Sewer Pipe		Size (mm)	Length (m)	u/s Invert	d/s Invert
From MH	**To MH**				
17	***16***	375	90.36	257.601	257.401
16	***15***	375	93.02	257.401	256.734
15	***14***	375	77.57	256.719	255.812
14	***13***	375	7.44	255.792	255.406
13	***12***	525	56.83	255.391	255.17
12	***11***	675	25.74	255.055	254.865
11	***10***	675	19.91	254.89	254.815
10	***9***	750	26.35	254.76	254.663
9	***8***	750	71.80	254.653	254.366
8	***7***	750	36.49	254.366	254.194
7	***6***	750	52.07	254.179	253.973
6	***5***	750	22.98	253.958	253.883
5	***4***	750	24.11	253.88	253.787
4	***3***	750	19.88	253.787	253.686
3	***2***	750	61.52	253.686	253.436
2	***1***	750	24.73	253.434	253.229
1	***Outlet***	1050	67.57	253.104	252.922

Note: 1 -- Based on the field measurements completed by Valdor Engineering Inc.

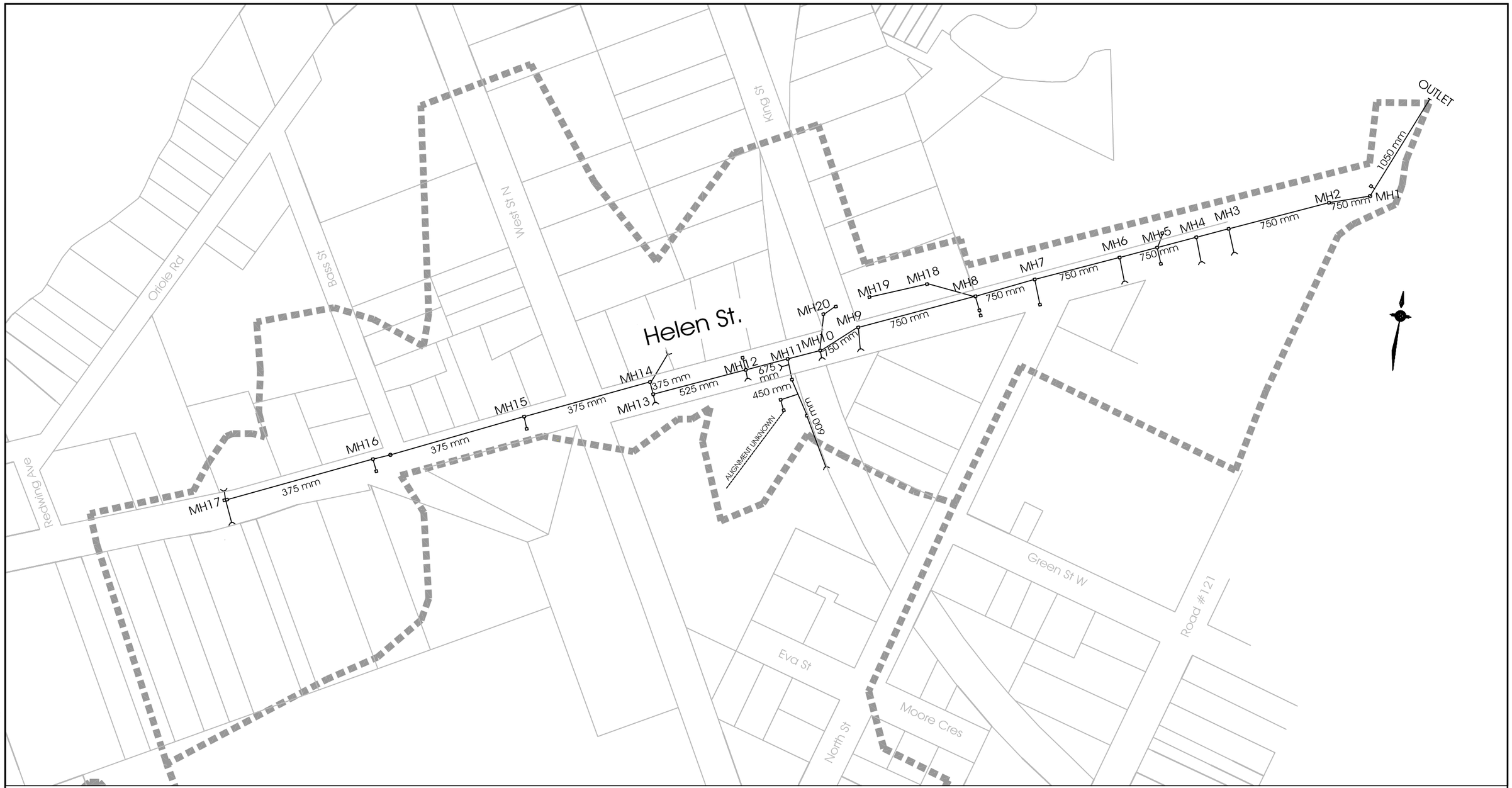

FIGURE A.1

EXISTING HELEN STREET STORM SEWER SYSTEM

LEGEND

---- DRAINAGE BOUNDARY

—— STORM SEWER

City of KAWARTHA LAKES
Catch the Kawartha spirit

VALDOR ENGINEERING INC.
Consulting Engineers - Project Managers
661 CHRISLEA ROAD, SUITE 11, WOODBRIDGE, ONTARIO, L4L 8A3
TEL (905)264-0054, FAX (905)264-0059 E-MAIL: info@valdorengineering.com
www.valdor-engineering.com

S:\Projects\2009\09123\Drawings\Base_Map.dwg 9/23/2009 6:25:33 PM EDT

KAWARTHA CONSERVATION

Legend

- Lot and Concession
- Township Boundary
- Interim Regulation Limit
- Screening Area

This map represents screening areas under Ontario Regulation 97/04: Development, Interference with Wetlands and Alterations to Shorelines and Watercourse. The text of the regulation takes precedence over the Interim Regulation Limits mapping. Some regulated features may not appear on this map.

N

Kawartha Region Conservation Authority

					109	110
				106	107	108
				104	105	
		101		102	103	
95	96	97	98	99	100	
89	90	91	92	93	94	
83	84	85	86	87	88	
77	78	79	80	81	82	
71	72	73	74	75	76	
65	66	67	68	69	70	
59	60	61	62	63	64	
52	53	54	55	56	57	58
45	46	47	48	49	50	51
38	39	40	41	42	43	44
31	32	33	34	35	36	37
24	25	26	27	28	29	30
17	18	19	20	21	22	23
11	12	13	14	15	16	
5	6	7	8	9	10	
1	2	3	4			

0 5 10 20
Kilometres

The Interim regulation limit is a compilation of various information sources. Existing floodplain mapping was previously prepared for Kawartha Conservation by engineering consultants. Erosion hazards were included through utilizing Fill, Construction and Alteration to Waterways regulations mapping and assigning 15 m allowances to it. Provincially Significant Wetland delineation were provided by the Ministry of Natural Resources. All other wetland delineations were mapped by Kawartha Conservation staff using the Ecological Land Classification system. Wetlands smaller than 2.0 ha in size were assigned an allowance of 30 m. Wetlands larger than 2.0 ha in size were assigned an allowance of 120 m in order to identify lands where development could interfere with the function of a wetland. For more details, please refer to "Terms of Reference: Determination of Interim Regulation Limits under Ontario Regulation 97/04" (Kawartha Conservation, October 2005) or for more information contact Kawartha Conservation at (705) 328-2271. Orthophotography provided by First Base Solutions Inc. - Flown April 2002.

NO. | REVISIONS:

1:10,000

0 0.25 0.5 1 1.5 2

Kilometres

PLOT DATE: **November 2005**

FILE: **GenericRegs_MapSheet_79.mxd**

SCREENING MAP

REGULATION OF DEVELOPMENT, INTERFERENCE WITH WETLANDS AND ALTERATIONS TO SHORELINES AND WATERCOURSES (ONTARIO REGULATION 97/04)

SHEET NO.

79

APPENDIX "B"

Supporting Hydrology and Hydraulic Calculations

Fenelon Falls Drainage Study (Basin DD)
and Traffic Impact Study

City of Kawartha Lakes

Table B.1: Overland Flow Length Calcs for Hydrology Model (PCSWMM 2009)

Catchment ID	Flow Length (m)
external	187.15
1	8.50
2	23.48
3	17.28
4	51.70
5	14.06
6	18.75
7	13.54
8	6.37
9	5.52
10	6.69
11	16.58
12	144.07
13	6.48
14	6.67
15	6.77
16	7.22
17	5.08
18	157.80
19	101.05
20	10.03
21	55.23
22	66.81
23	137.92
24	7.49
25	37.20
26	767.65
27	18.03
28	17.43
29	17.75
30	17.29
31	17.11
32	34.82
33	45.95
34	29.5
35	55.4
36	10.03

Refer to PCSWMM 2009 Schematic for Catchment Location

VALDOR ENGINEERING INC.

File: 09123

November 2009

Table B.2: Curve Numbers for Hydrology Model (PCSWMM 2009)

Catchment ID	CN Value
external	73
1	95
2	98
3	85
4	80
5	85
6	85
7	98
8	98
9	98
10	92
11	85
12	72
13	90
14	92
15	88
16	92
17	87
18	65
19	70
20	80
21	70
22	65
23	70
24	61
25	65
26	70
27	80
28	78
29	76
30	98
31	98
32	68
33	86
34	68
35	87
36	90

CN Values Used (B soil type)

Land Type	CN Value
Forest (Poor)	66
Forest (Good)	55
Open/Lawn (Fair)	69
Open/Lawn (Good)	61
Cultivated (Row)	81
Cultivated (Rotational)	77
Residential (65% IMP)	85
Residential (38% IMP)	75
Residential (30% IMP)	72
Residential (25% IMP)	70
Residential (20% IMP)	68
Commercial (85% IMP)	92

Note: CN's chosen based on % impervious and land use

Refer to PCSWMM 2009 Schematic for Catchment Location

VALDOR ENGINEERING INC.
File: 09123
November 2009

Table B.3: Initial Abstractions Values for Hydrology Model (PCSWMM 2009)

Catchment ID	Pervious Area IA Value (mm)
external	8
1	5
2	5
3	5
4	5
5	5
6	5
7	5
8	5
9	5
10	5
11	5
12	5
13	5
14	5
15	5
16	5
17	5
18	5.25
19	5
20	5
21	5
22	5
23	5
24	5
25	5
26	8
27	5
28	5
29	5
30	5
31	5
32	5
33	5
34	5
35	5
36	5

Initial Abstraction Values Used

Cover	IA Depth (mm)
Woods	10
Cultivated	7
Lawn	5
Impervious	1

NOTES:
1. All impervious area IA values are 1 mm
2. Pervious area is considered to be 'lawn' for areas within the Village

Refer to PCSWMM 2009 Schematic for Catchment Location

VALDOR ENGINEERING INC.
File: 09123
November 2009

Table B.4: Imperviousness Calcs for Hydrology Model (PCSWMM 2009)

Catchment ID	% Impervious	Notes
	1.3	approx. measured - area of roofs, driveways, road
1	89.3	
2	100.0	road
3	100.0	road
4	41.7	
5	75.6	
6	100.0	road
7	100.0	road
8	100.0	road
9	100.0	road
10	77.3	
11	54.7	
12	28.8	
13	78.1	
14	84.5	
15	72.8	
16	81.1	
17	71.5	
18	13.4	
19	22.5	
20	44.6	
21	23.2	
22	7.4	
23	23.0	
24	0.0	grass/ditch
25	10.5	
26	0.0	no impervious
27	49.8	
28	46.9	
29	42.4	
30	100	road
31	100	road
32	12.5	
33	69.1	
34	17.0	
35	71.5	
36	80.0	

NOTE: % impervious values measured by locating area for roads/buildings on satellite image and dividing by total area

Refer to PCSWMM 2009 Schematic for Catchment Location

VALDOR ENGINEERING INC.
File: 09123
November 2009

Table B.5: Field Survey Measurements
-- Spill Point Along Drainage Course Behind Canadian Tire Near Lindsay Street

#	ΔX (m)	X (m)	Height (m)	Tie-in Point (m)	Tie-in Point (m)	Elevation (m)
0	0.000	0.000	3.360			259.040
1	2.000	2.000	3.380			259.020
2	2.000	4.000	3.420			258.980
3	2.000	6.000	3.480			258.920
4	2.000	8.000	3.470			258.930
5	2.000	10.000	3.510			258.890
6	2.000	12.000	3.530			258.870
7	2.000	14.000	3.580			258.820
8	2.000	16.000	3.570			258.830
9	2.000	18.000	3.620			258.780
10	2.000	20.000	3.640			258.760
11	2.000	22.000	3.650	1.520	260.88	**258.750**
12	2.000	24.000	3.610			258.790
13	2.000	26.000	3.570			258.830
14	2.000	28.000	3.610			258.790
15	2.000	30.000	3.580			258.820
16	2.000	32.000	3.470			258.930
17	2.000	34.000	3.410			258.990
18	2.000	36.000	3.360			259.040
19	2.000	38.000	3.270			259.130
20	2.000	40.000	3.190			259.210
21	2.000	42.000	3.170			259.230
22	2.000	44.000	3.170			259.230

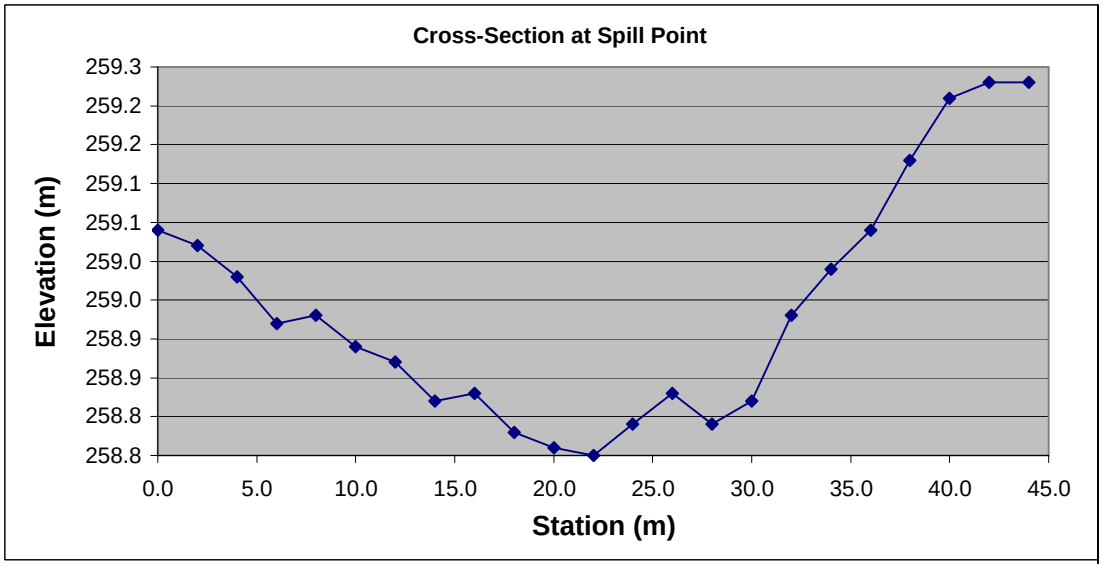

VALDOR ENGINEERING INC.
File: 09123
November 2009

Table B.6: Field Survey Measurements
-- Drainage Course Behind Home Hardware Near Lindsay Street

#	ΔX (m)	X (m)	Height (m)	Tie-in Point (m)	Tie-in Point (m)	Elevation (m)
0	0.000	0.000	1.300			257.250
1	5.000	5.000	1.310			257.240
2	5.000	10.000	1.330			257.220
3	5.000	15.000	1.390			257.160
4	5.000	20.000	1.430			257.120
5	5.000	25.000	1.510			257.040
6	5.000	30.000	1.530			257.020
7	5.000	35.000	1.650			256.900
8	5.000	40.000	1.580			256.970
9	5.000	45.000	1.440			257.110
10	5.000	50.000	1.540			257.010
11	5.000	55.000	1.660	1.300	257.25	256.890
12	5.000	60.000	1.470			257.080
13	5.000	65.000	1.520			257.030
14	5.000	70.000	1.560			256.990
15	5.000	75.000	1.520			257.030
16	5.000	80.000	1.520			257.030
17	5.000	85.000	1.520			257.030
18	5.000	90.000	1.450			257.100
19	5.000	95.000	1.400			257.150
20	5.000	100.000	1.380			257.170
21	5.000	105.000	1.430			257.120
22	5.000	110.000	1.470			257.080

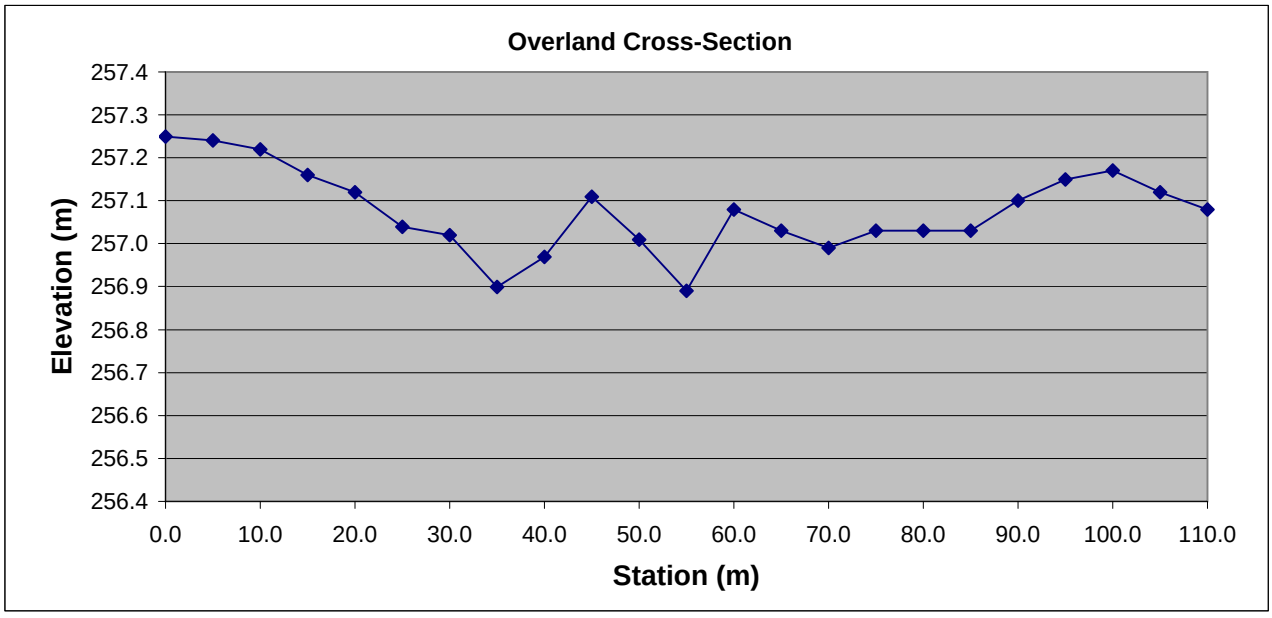

VALDOR ENGINEERING INC.
File: 09123
November 2009

Table B.7: Rating Curve for the Flow Split Between the Culvert on Lindsay Street and the Drainage Course Behind Canadian Tire

Flow Split Rating Curve				
Return Period	**Water Elev (m)**	**Flow to Culvert Under Lindsay Street (m^3/s)**	**Flow to Drainage Course Behind Canadian Tire (m^3/s)**	**Total Flow (m^3/s)**
	258.535	0.0000	0.0000	0.000
	258.700	0.097	0.000	0.097
	258.750	0.144	0.000	0.144
	258.800	0.197	0.020	0.217
	258.820	0.220	0.040	0.260
2-yr	258.830	0.232	0.080	0.312
	258.850	0.256	0.110	0.366
	258.880	0.293	0.230	0.523
5-yr	258.890	0.306	0.280	0.586
	258.910	0.332	0.390	0.722
10-yr	258.920	0.346	0.450	0.796
	258.945	0.380	0.620	1.000
	258.950	0.387	0.670	1.057
25-yr	258.960	0.401	0.760	1.161
	258.965	0.408	0.810	1.218
50-yr	258.976	0.424	0.920	1.344
	258.985	0.437	1.020	1.457
	258.995	0.452	1.130	1.582
100-yr	258.997	0.455	1.160	1.615
	259.000	0.459	1.190	1.649
	259.050	0.535	1.890	2.425
Timmins	259.060	0.551	2.070	2.621
	259.070	0.566	2.250	2.816

Table B.8: Lindsay Filtration Plant IDF Parameters

	2-Year	5-Year	10-Year	25-Year	50-Year	100-Year
A	808.793	1248.043	1486.840	1917.901	2141.858	2465.877
B	7.421	9.759	10.440	11.842	12.181	12.899
C	0.835	0.857	0.859	0.873	0.872	0.879

Table B.9: Chicago Storm for Lindsay Filtration Plant -- Rainfall Intensity (mm/hr)

Time (min)	2-Year	5-Year	10-Year	25-Year	50-Year	100-Year
0	0.00	0.00	0.00	0.00	0.00	0.00
5	2.18	2.82	3.35	3.84	4.36	4.73
10	2.40	3.12	3.71	4.27	4.85	5.28
15	2.66	3.49	4.16	4.81	5.46	5.96
20	2.99	3.96	4.72	5.50	6.25	6.84
25	3.42	4.58	5.47	6.42	7.29	8.00
30	4.01	5.43	6.50	7.68	8.72	9.60
35	4.84	6.66	7.98	9.51	10.79	11.95
40	6.14	8.58	10.30	12.38	14.05	15.61
45	8.39	11.94	14.34	17.41	19.72	22.01
50	13.14	19.00	22.79	27.87	31.49	35.25
55	28.42	40.65	48.22	58.54	65.62	73.15
60	98.66	124.23	141.80	163.01	179.41	195.21
65	51.58	70.91	82.90	98.75	109.85	121.36
70	27.20	39.14	46.53	56.65	63.57	70.95
75	17.87	25.93	31.02	37.98	42.80	47.92
80	13.13	18.98	22.77	27.86	31.48	35.25
85	10.31	14.80	17.77	21.67	24.53	27.43
90	8.46	12.04	14.46	17.56	19.90	22.21
95	7.17	10.11	12.14	14.67	16.63	18.53
100	6.21	8.69	10.42	12.54	14.23	15.82
105	5.48	7.60	9.12	10.92	12.39	13.74
110	4.91	6.75	8.09	9.65	10.95	12.12
115	4.44	6.07	7.27	8.63	9.80	10.82
120	4.06	5.51	6.59	7.79	8.85	9.76
125	3.74	5.04	6.03	7.10	8.06	8.87
130	3.47	4.65	5.55	6.52	7.40	8.13
135	3.23	4.31	5.15	6.02	6.84	7.49
140	3.03	4.02	4.80	5.59	6.35	6.95
145	2.85	3.77	4.49	5.22	5.92	6.47
150	2.70	3.54	4.22	4.89	5.55	6.06
155	2.56	3.34	3.98	4.60	5.22	5.69
160	2.43	3.17	3.77	4.34	4.93	5.37
165	2.32	3.01	3.58	4.11	4.67	5.07
170	2.21	2.86	3.41	3.90	4.43	4.81
175	2.12	2.73	3.25	3.72	4.22	4.58
180	2.04	2.62	3.11	3.55	4.03	4.36

Table B.10: Input Flows From Lindsay Street Storm Sewer (PCSWMM 2009)

Return Period	Peak Flow (cms)
2-yr	0.804
5-yr	1.078
10-yr	1.252
25-yr	1.482
50-yr	1.647
100-yr	1.816

Note: Calculated using the Rational Method with Lindsay IDF Parameters

AR = 14.78 ac = 5.98 ha (as per "Storm Drainage Study, South Half, Village of Fenelon Falls", TSH, 1978)

Tc = 21.74 min (as per "Storm Drainage Study, South Half, Village of Fenelon Falls", TSH, 1978)

Table B.11: Storm Analysis to Determine Critical Duration (PCSWMM 2009)

Storm	Peak Flow (m^3/s)	
	External Flow (Catchment #99)	**Total Flow (Flow Node 103)**
Regional (Timmins)	**3.518**	**6.849**
100-yr 3h Chicago	1.001	5.188
100-yr 6h Chicago	1.122	5.408
100-yr 12h Chicago	1.262	5.631
100-yr 24h Chicago	1.413	**5.872**
100-yr 6h SCS	**1.713**	5.701
100-yr 12h SCS	1.475	4.864
100-yr 24h SCS	1.247	4.106
5-yr 3h Chicago	0.213	2.636
5-yr 6h Chicago	0.213	2.679
5-yr 12h Chicago	0.213	2.702
5-yr 24h Chicago	0.216	**2.726**
5-yr 6h SCS	**0.233**	2.001
5-yr 12h SCS	0.203	1.783
5-yr 24h SCS	0.187	1.592
2-yr 3h Chicago	0.169	2.038
2-yr 6h Chicago	0.169	2.055
2-yr 12h Chicago	0.169	2.067
2-yr 24h Chicago	**0.169**	**2.083**
2-yr 6h SCS	0.098	1.278
2-yr 12h SCS	0.090	1.189
2-yr 24h SCS	0.082	1.099
50-yr 24h Chicago	1.060	5.041
25-yr 24h Chicago	0.738	4.246
10-yr 24h Chicago	0.412	3.350

Table B.12: Summary of Helen Street Storm Sewer System Capacity Check

MH 8 (Ground El = 255.81 m)	2 year	5 year	10 year	25 year	50 year	100 year	Timmins
Total Overland and Pipe Flow Near MH8 Simulated Using PCSWMM (m^3/s)	1.36	1.95	2.32	2.82	3.21	3.62	5.17
Max Flow Captured In Existing Helen Street Sewer at MH8 Simulated Using PCSWMM (m^3/s)	0.771	0.798	0.811	0.825	0.849	0.901	0.905
Design Flow Capacity Based on Storm Sewer Design Sheet Near MH 8 (m^3/s)	0.753	Pipe capacity of Helen Street Storm Sewer is less than 2-year flow					
Major Flow Overtopping Helen Street Simulated Using HEC-RAS Model	Major flow will overtop Helen Street approximately from 5 -year storm						
HGL Simulated Using PCSWMM (m)	255.63	255.68	255.71	255.76	**255.80**	**255.81**	**255.81**
Remarks	Surcharging above obvert, but no Surcharging above Ground				**HGL almost at Ground Level**	**Surcharging Above Ground**	

Note: HGL - Hydraulic Grade Line Refer to Excising Helen St. Storm Sewer System (**Figure A.1**) for MH Locations

Table B.13: Time to Peak Calculations for Hydrology Model (VO2)

Catchment ID	Runoff Coefficient 'c'	Elevation 1 (m)	Elevation 2 (m)	Length (m)	Slope (m/m)	Slope (%)	Tc (hrs)	Tp (hrs)
#18	0.29	260	256	400	0.010	1.00	0.88	0.59
#26	0.20	267	260	620	0.011	1.13	1.17	0.78
#99	0.21	281.5	260	1600	0.013	1.34	1.76	1.18

$$t_c \text{ (in minutes)} = \frac{3.26\,(1.1 - \text{Runoff Coefficient}) * \text{Length(m)}^{0.5}}{(\text{Slope\%})^{0.33}}$$

$$t_p = 0.67 * t_c$$

Note: Refer to Drainage Plan (**Figure 2**) for Location of Catchments

Table B.14: Summary of Hydrology Model Parameter (VO2)

Catchment ID	Size (ha)	CN Number	Ia (mm)	Tp (hours)	Imperv.
#99	47.39	73	8	0.59	
#26	21.85	70	8	0.78	
#18	16.34	65	5	1.18	
#999	11.29	N/A	N/A		0.50

Note: Refer to Drainage Plan (**Figure 2**) for Location of Catchments

Table B.15: Summary of Peak Flow Simulated Using the VO2 Model

Flow Node	2 year	5 year	10 year	25 year	50 year	100 year	Timmins
Flow to Lindsay Street Culvert (Node LSC)	***0.23***	***0.31***	***0.35***	***0.40***	***0.42***	***0.46***	***0.55***
Catchment #99	0.30	0.58	0.80	1.10	1.35	1.61	2.63
Catchment #99 - Flow to Lindsay St.	**0.07**	**0.27**	**0.45**	**0.70**	**0.93**	**1.15**	**2.08**
Flow Node 101 (VO2)	0.45	0.87	1.20	1.66	2.05	2.45	3.90
Flow Node 101 - Flow to Lindsay St.	**0.22**	**0.56**	**0.85**	**1.26**	**1.63**	**1.99**	**3.35**
Flow Node 102 (VO2)	0.57	1.09	1.51	2.09	2.58	3.07	4.81
Flow Node 102 - Flow to Lindsay St.	**0.34**	**0.78**	**1.16**	**1.69**	**2.16**	**2.61**	**4.26**
Flow Node 103 (VO2)	0.84	1.26	1.70	2.33	2.86	3.39	5.44
Flow Node 103 - Flow to Lindsay St.	**0.61**	**0.95**	**1.35**	**1.93**	**2.44**	**2.93**	**4.89**

Table B.16: Flows Applied in the HEC-RAS Model Simulations to Determine Limits of Probable Flooding

MH 8 (Ground El = 255.81 m)	Size (ha)	CN Number	VO2 Simulated Flow (m^3/s)	
			100 year	Timmins
Catchment #99	47.39	73	1.61	2.63
Catchmen #26	21.85	70	0.92	1.36
Catchmen #18	21.85	65	0.77	1.05
Catchmen #999	16.34	N/A	2.09	1.09

Sub-catchment ID	Flow Captured by Minor System (m^3/s)		Flow to the Lindsay Street Culvert (m^3/s)		Total Flow Simulated Using VO2 (m^3/s)		Flow Used in HEC-RAS Model (m^3/s)	
	100 year	Timmins	100 year	Timmins	100 year	Timmins	100 year	Timmins
Catchment #99	0	0	0.455	0.551	1.61	2.63	**1.155**	**2.079**
Flow Node 101	0	0	0.455	0.551	2.45	3.9	**1.995**	**3.349**
Flow Node 102	0.592	0.592	0.455	0.551	3.07	4.81	**2.023**	**3.667**
Flow Node 103	0.309	0.309	0.455	0.551	3.39	5.44	**2.626**	**4.580**

Note: Refer to Drainage Plan (**Figure 2**) for Location of Catchments and Flow Nodes

Table B.17: Sample Storm Sewer Capacity Spreadsheet used to Determine the Size of Storm Sewer Required for Various Drainage Options Assuming Pipe Replacement

City of Kawartha

VALDOR ENGINEERING INC.
660 Chrislea Road, Suite 11, Woodbridge, Ontario L4L 8A3
Tel: 905-264-0054 Fax: 905-264-0068

Project: 09123
Date: Oct. 2009

			Length (M)	5 Year Flow (Rational Method)							Controlling Flow										
STREET	From MH	To MH		A (ha)	R	A x R	Accum. A x R	T_c (min)	I (mm/hr)	Q_5 (m^3/s)	Control Flow	Q_{des} (m^3/s)	Size of Pipe (mm)	Slope (%)	Actual Capacity Q_{cap} (m^3/s)	Nominal Capacity Q_{cap} (m^3/s)	Full Flow Velocity (m/s)	Actual Flow Velocity (m/s)	Length (m)	Time in Sect. (min)	Total Time (min)	Q_{des}/Q_{cap}
HELEN STREET (TSH 1978)	MH26	MH25	58.83	0.745	0.45	0.335	4.550	33.20	50.1	0.633	5-yr	0.633	825	0.25%	0.749	0.718	1.36	1.52	68.54	0.8	34.04	0.85
HELEN STREET (TSH 1978)	MH25	MH24	64.01	0.109	0.50	0.055	4.605	34.04	49.2	0.630	5-yr	0.630	825	0.30%	0.820	0.786	1.49	1.63	14.00	0.2	34.20	0.77
HELEN STREET (TSH 1978)	MH24	MH23	60.96	0.482	0.50	0.241	4.846	34.20	49.1	0.661	5-yr	0.661	825	0.30%	0.820	0.786	1.49	1.65	36.73	0.4	34.61	0.81
HELEN STREET (TSH 1978)	MH23	MH22	60.96	0.465	0.50	0.233	5.078	34.61	48.7	0.687	5-yr	0.687	900	0.20%	0.845	0.810	1.29	1.43	26.70	0.3	34.96	0.81
HELEN STREET (TSH 1978)	MH22	MH12	82.30	0.372	0.50	0.186	5.264	34.96	48.4	0.707	5-yr	0.707	900	0.20%	0.845	0.810	1.29	1.44	18.86	0.2	35.20	0.84
HELEN STREET (Valdor)	MH7	MH6	52.07	0.745	0.45	0.335	4.550	33.20	50.1	0.633	5-yr	0.633	750	0.42%	0.753	0.721	1.65	1.85	68.54	0.7	33.89	0.84
HELEN STREET (Valdor)	MH6	MH5	22.98	0.109	0.50	0.055	4.605	34.04	49.2	0.630	5-yr	0.630	750	0.34%	0.677	0.649	1.48	1.69	14.00	0.2	34.20	0.93
HELEN STREET (Valdor)	MH5	MH4	24.11	0.482	0.50	0.241	4.846	34.20	49.1	0.661	5-yr	0.661	750	0.39%	0.725	0.695	1.59	1.80	36.73	0.4	34.58	0.91
HELEN STREET (Valdor)	MH4	MH3	19.88	0.465	0.50	0.233	5.078	34.61	48.7	0.687	5-yr	0.687	750	0.50%	0.821	0.787	1.80	2.01	26.70	0.2	34.86	0.84
HELEN STREET (Valdor)	MH3	MH2	61.52	0.465	0.50	0.233	5.078	34.61	48.7	0.687	5-yr	0.687	750	0.41%	0.744	0.713	1.63	1.85	27.70	0.3	34.89	0.92
HELEN STREET (Valdor)	MH2	MH1	24.73	0.372	0.50	0.186	5.264	34.96	48.4	0.707	5-yr	0.707	750	1.33%	1.339	1.284	2.94	2.96	18.86	0.1	35.06	0.53
NEW DEVELOPMENTS	$Q_{2\text{-yr}}$	=	1.11 cms		$Q_{5\text{-yr}}$	=	***1.44 cms***		$Q_{10\text{-yr}}$	=	5-yr		Q	=	1.44 + 0.71	=	***2.15 cms***					
HELEN STREET	MH7	MH6	52.07	0.745	0.45	0.335	4.550	33.20	50.1	2.150	5-yr	2.15	1200	0.50%	2.876	2.757	2.46	2.70	68.54	0.5	33.66	0.75
HELEN STREET	MH6	MH5	22.98	0.109	0.50	0.055	4.605	34.04	49.2	2.150	5-yr	2.15	1200	0.50%	2.876	2.757	2.46	2.70	14.00	0.1	34.14	0.75
HELEN STREET	MH5	MH4	24.11	0.482	0.50	0.241	4.846	34.20	49.1	2.150	5-yr	2.15	1200	0.50%	2.876	2.757	2.46	2.70	36.73	0.2	34.45	0.75
HELEN STREET	MH4	MH3	19.88	0.465	0.50	0.233	5.078	34.61	48.7	2.150	5-yr	2.15	1200	0.50%	2.876	2.757	2.46	2.70	26.70	0.2	34.79	0.75
HELEN STREET	MH3	MH2	61.52	0.465	0.50	0.233	5.078	34.61	48.7	2.150	5-yr	2.15	1200	0.50%	2.876	2.757	2.46	2.70	27.70	0.2	34.80	0.75
HELEN STREET	MH2	MH1	24.73	0.372	0.50	0.186	5.264	34.96	48.4	2.150	5-yr	2.15	1200	0.50%	2.876	2.757	2.46	2.70	18.86	0.1	35.08	0.75
HELEN STREET OUTLET (TSH 1978 Design Sheet)	MH12	OUTLET	67.97	Length		Slope			Capacity													
				67.57	(67.97)	253.263	252.922	0.50	2.01	*71.1*	5-yr	1.464	1050	0.50%	2.014	1.931	2.25	2.45	6.00	0.0	0.55	0.73
HELEN STREET OUTLET (Measured by Valdor)	MH1	OUTLET	67.57	Length		Slope			Capacity													
				67.57	(67.97)	253.104	252.922	0.27	1.48	*52.3*	5-yr	1.464	1050	0.27%	1.480	1.419	1.66	1.89	33.50	0.3	0.61	0.99
				A	R	A x R	Accum. A x R	T_c	I	Q_5												
Minimum HELEN STREET Required	MH1	OUTLET	67.57	(ha)				(min)	(mm/hr)	(m^3/s)												
				27.630	0.45	12.434	12.434	31.51	51.5	**1.088**	5-yr	1.088	1050	0.27%	1.480	1.419	1.66	1.80	68.54	0.7	32.20	0.74

Minimum LINDSAY STREET Required Based on the Previous Report	Capacity	Helen Street Required	Minimum Lindsay Required Based on the Previous Report	Capacity Required
	1.464	1.088	0.95	**2.038**

VALDOR ENGINEERING INC.
File: 09123
November 2009

Table B.18: Sample Storm Sewer Design Sheet Used to Determine the Size of Storm Sewer Required for Various Drainage Options Assuming No Pipe Replacement

Return Period	From MH	To MH	Q_{100} (m^3/s)	Size of Pipe (mm)	Slope (%)	Actual Capacity Q_{cap} (m^3/s)	Nominal Capacity Q_{cap} (m^3/s)	Full Flow Velocity (m/s)	Actual Flow Velocity (m/s)	Length (m)	Time in Sect. (min)	Total Time (min)	Q_{act}/Q_{cap}
2-year	1	2	0.410	600	0.50%	0.453	0.434	1.55	1.76	50.00	0.5	7.00	0.91
5-year	3	4	0.500	675	0.50%	0.620	0.594	1.68	1.87	50.00	0.5	7.00	0.81
10-year	5	6	0.560	750	0.50%	0.821	0.787	1.80	1.93	50.00	0.5	7.00	0.68
Return Period	From MH	To MH	Q_{100} (m^3/s)	Size of Pipe (mm)	Slope (%)	Actual Capacity Q_{cap} (m^3/s)	Nominal Capacity Q_{cap} (m^3/s)	Full Flow Velocity (m/s)	Actual Flow Velocity (m/s)	Length (m)	Time in Sect. (min)	Total Time (min)	Q_{act}/Q_{cap}
2-year	1	2	1.110	900	0.50%	1.335	1.280	2.03	2.27	50.00	0.4	7.00	0.83
5-year	3	4	1.440	975	0.50%	1.653	1.585	2.15	2.42	50.00	0.4	7.00	0.87
10-year	5	6	1.660	1050	0.50%	2.014	1.931	2.25	2.52	50.00	0.4	7.00	0.82

APPENDIX "C"

Hydrology and Hydraulic Model Output

Fenelon Falls Drainage Study (Basin DD)
and Traffic Impact Study

City of Kawartha Lakes

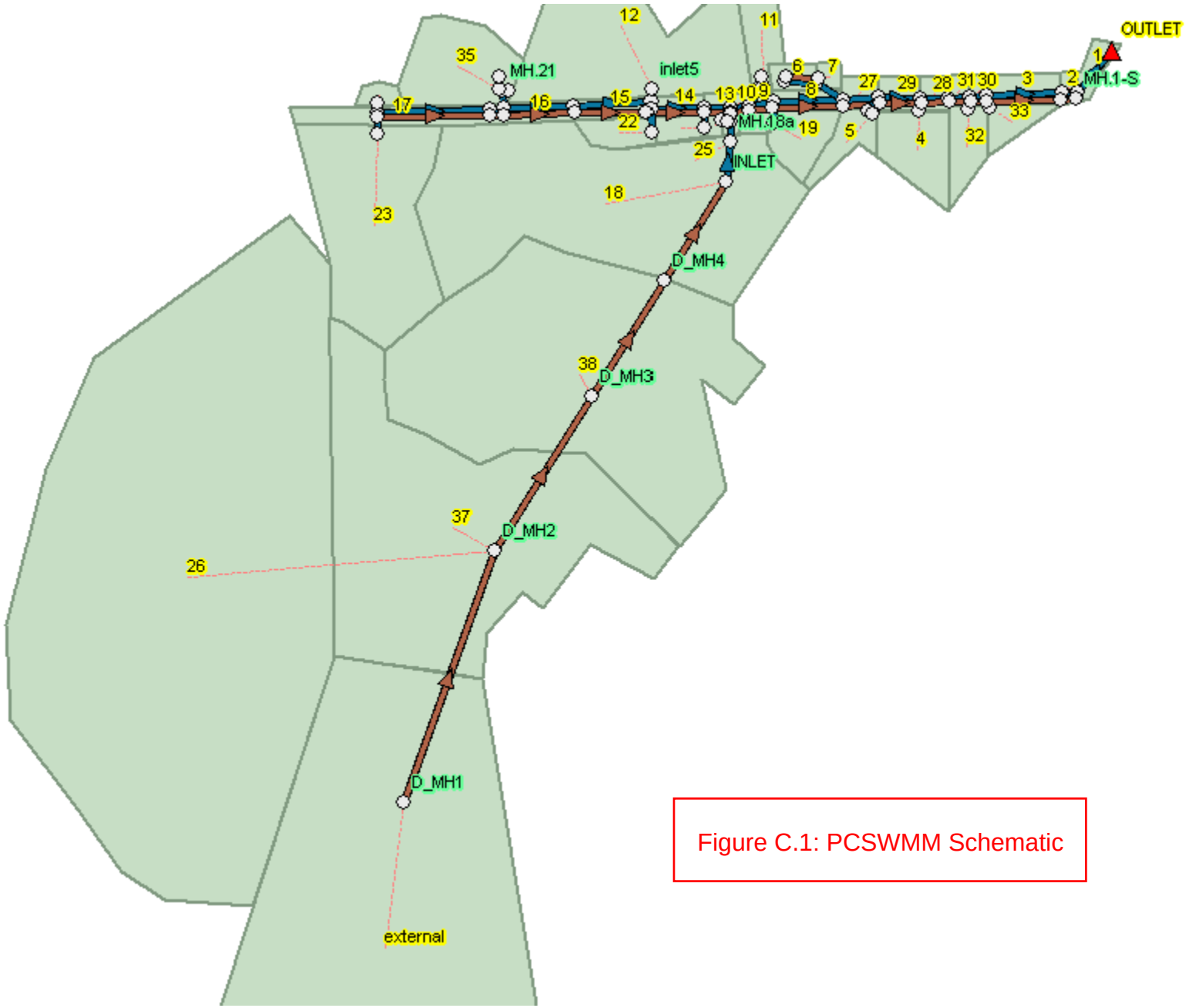

Figure C.1: PCSWMM Schematic

PCSWMM 2009 Simulation Results using 24-hr Chicago Storms

2-Year

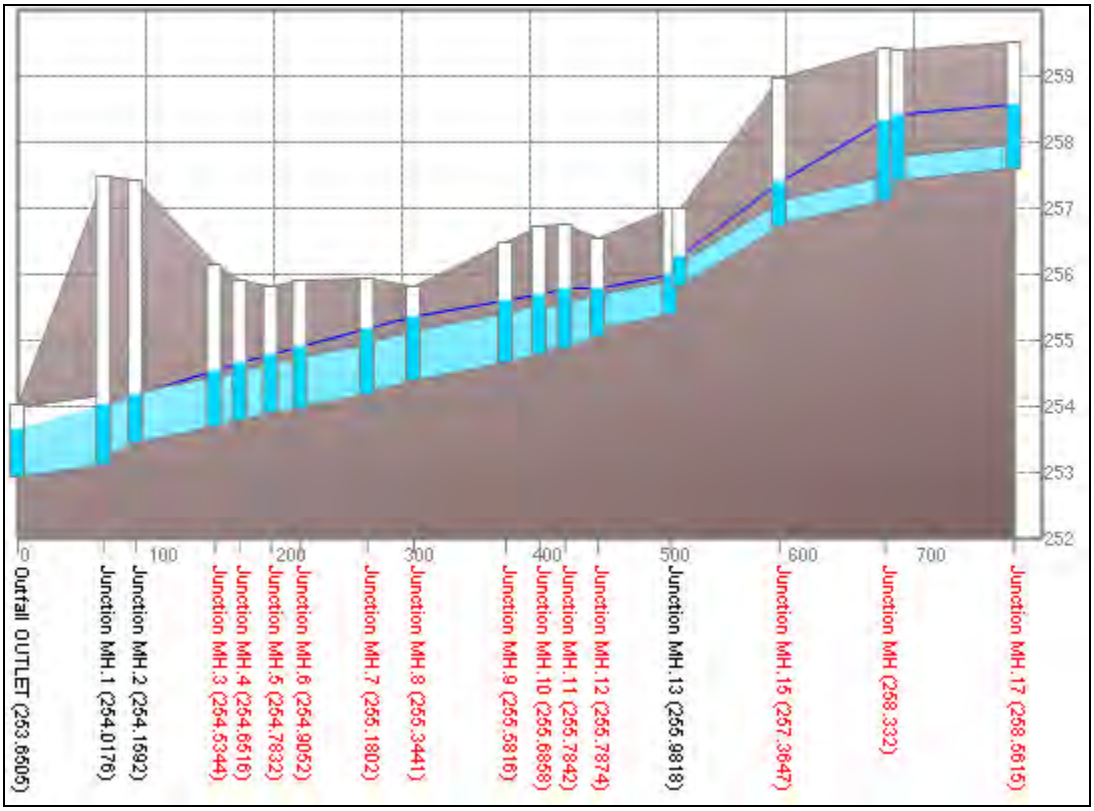

5-Year

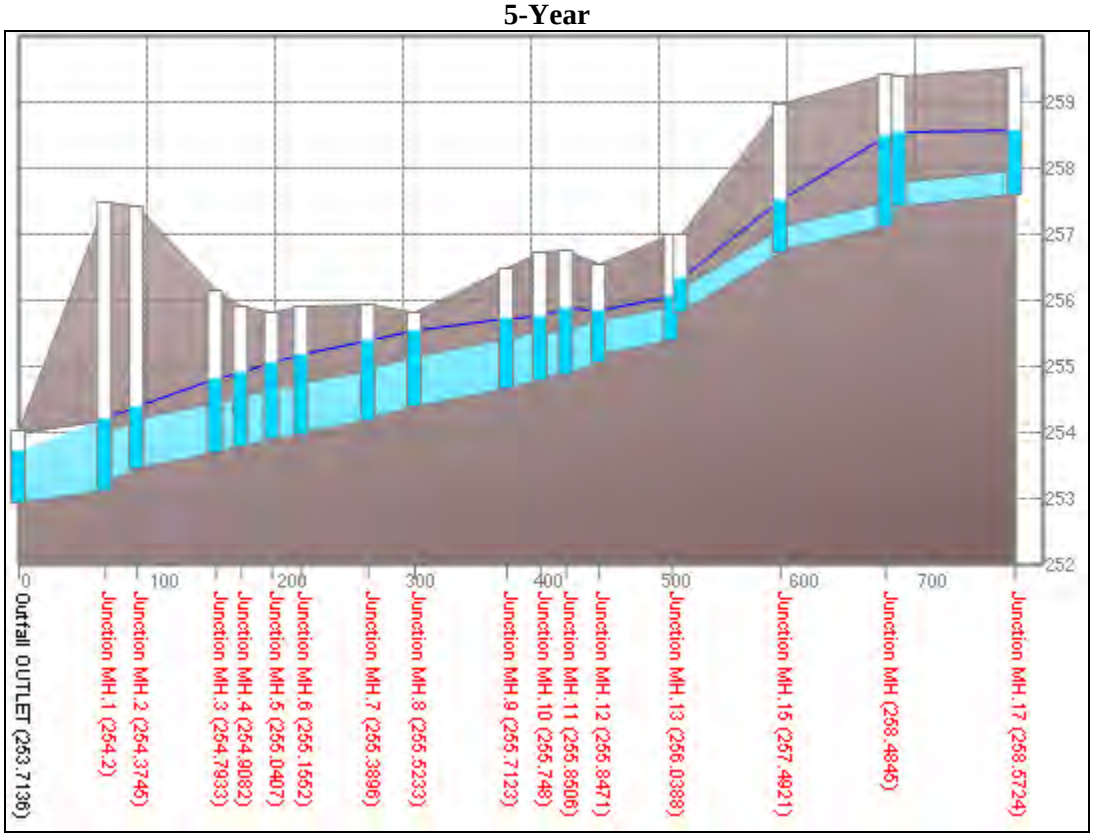

10-Year

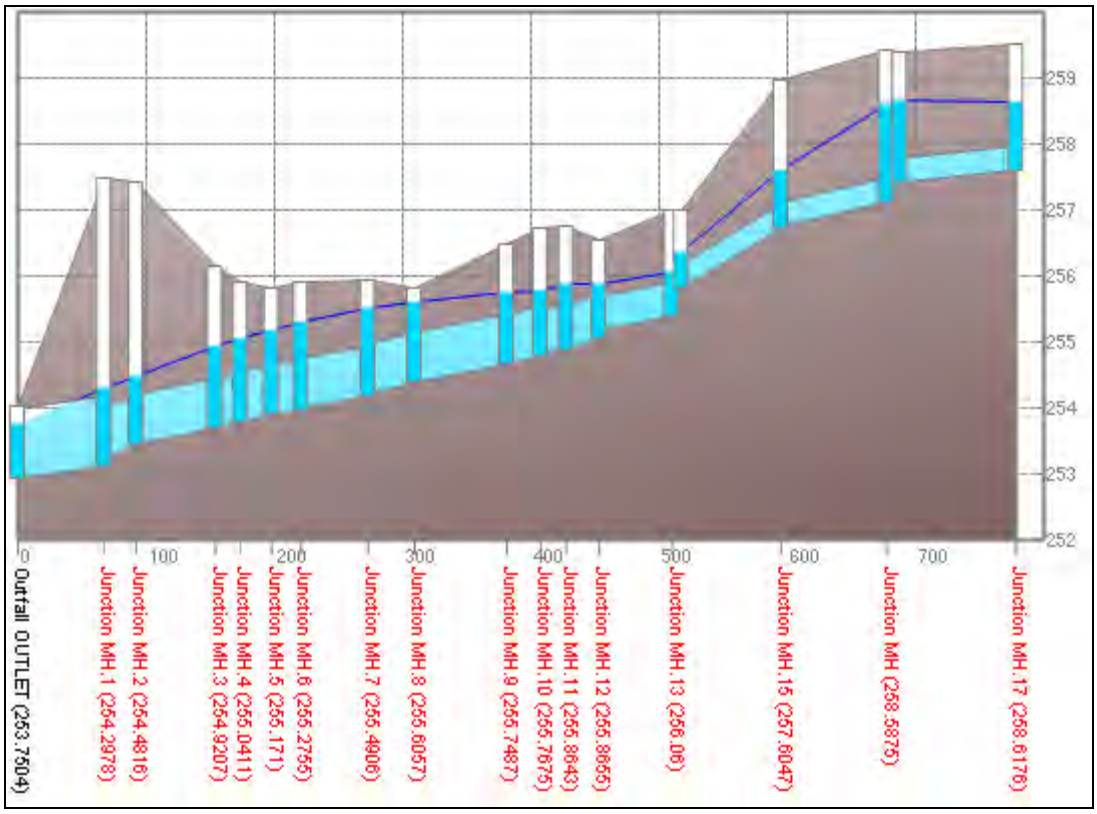

25-Year

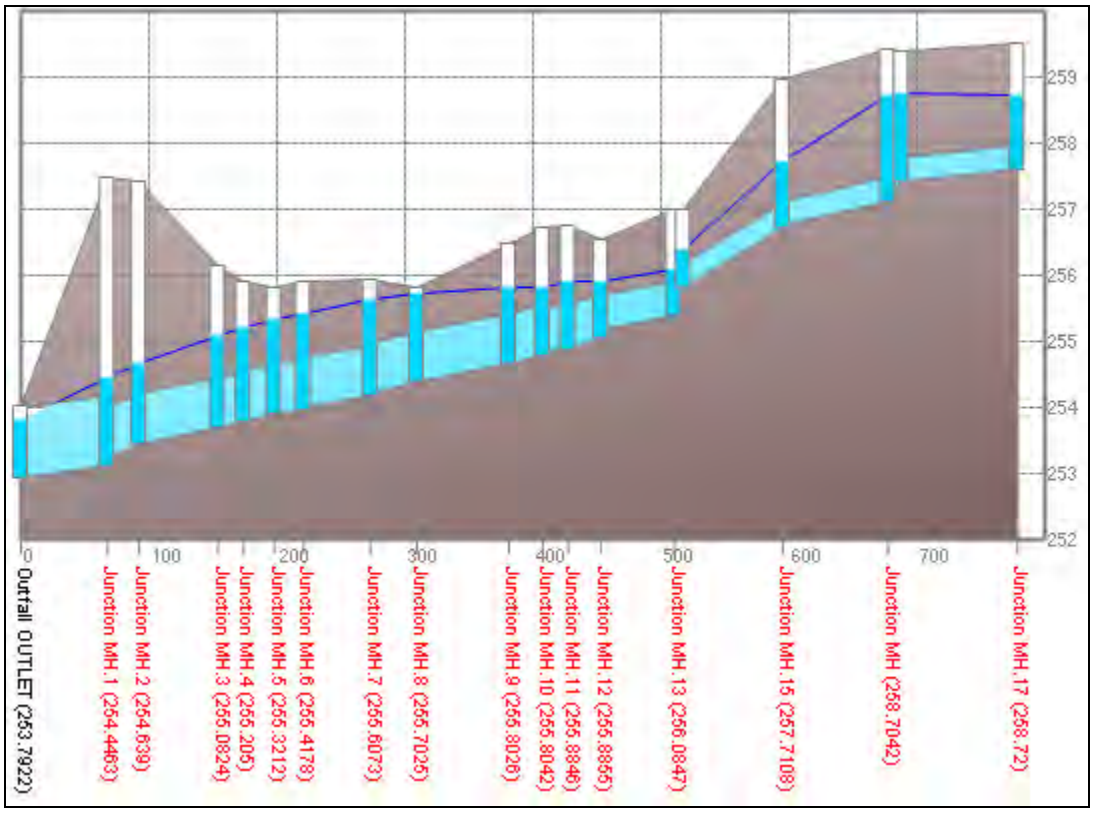

50-Year

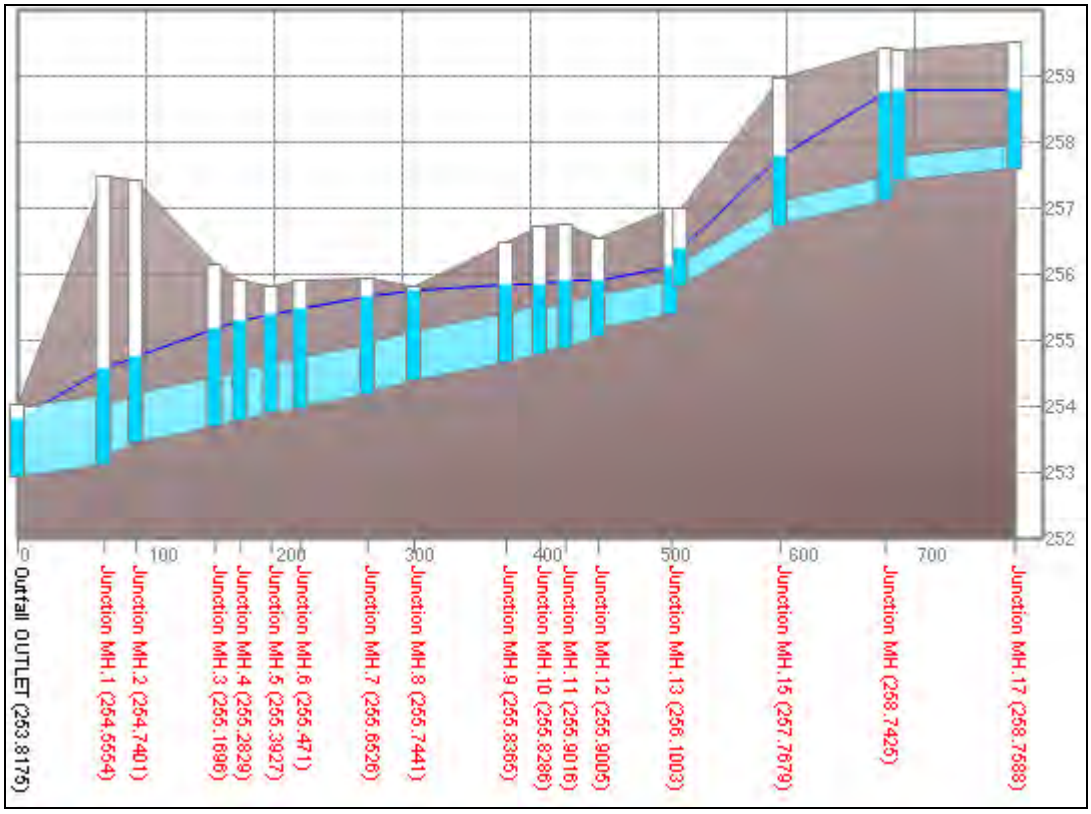

100-Year

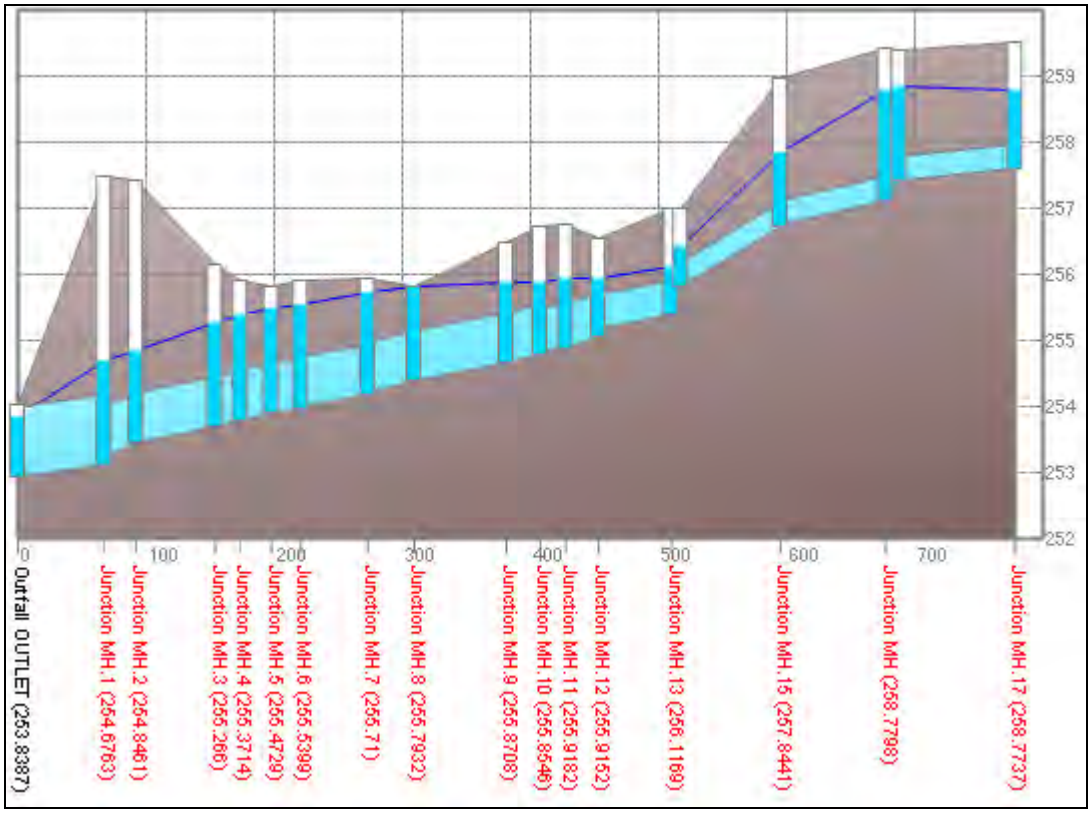

100-Year Inlet Section Profile

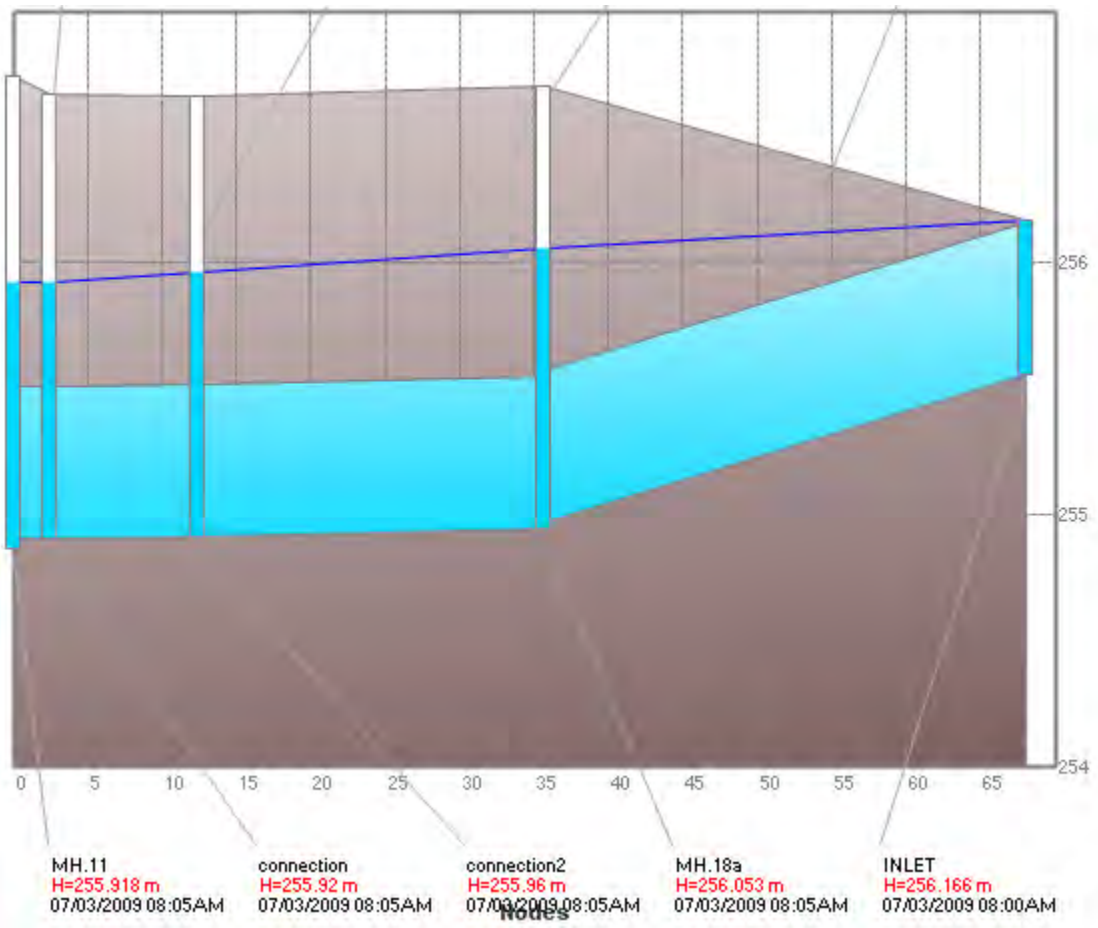

Regional (Timmins, using 100-yr flows from Lindsay St)

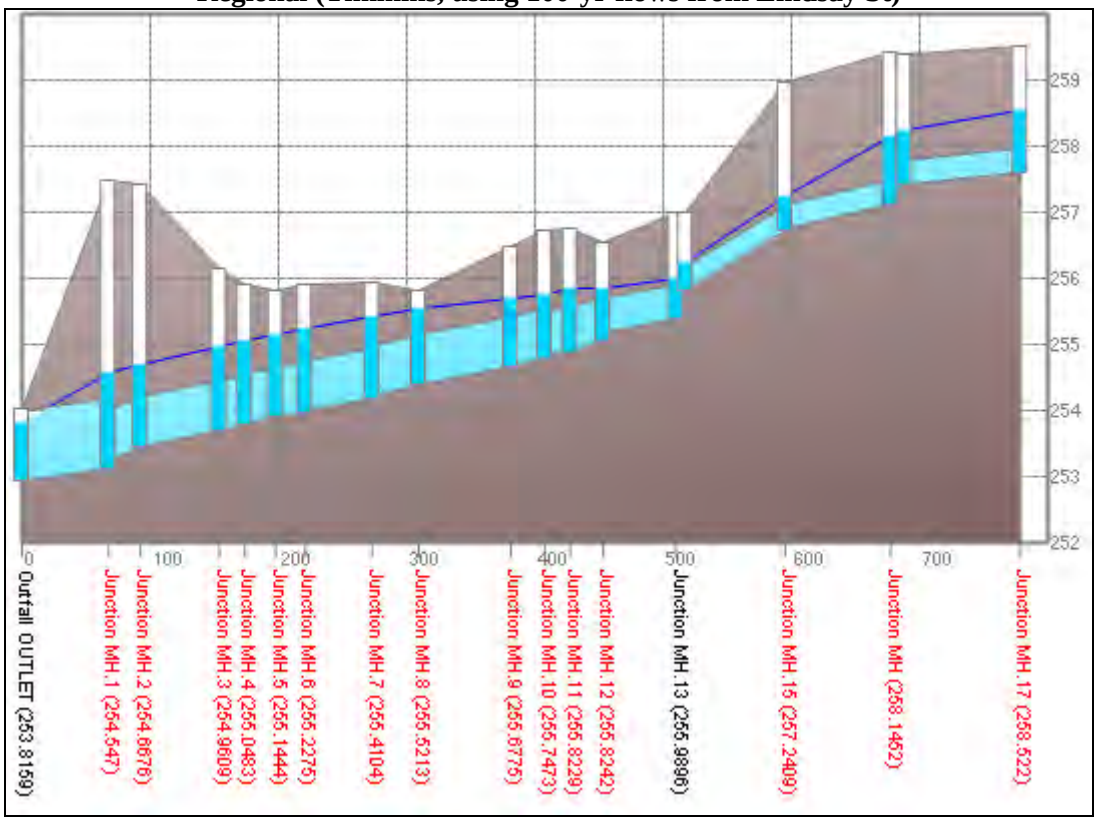

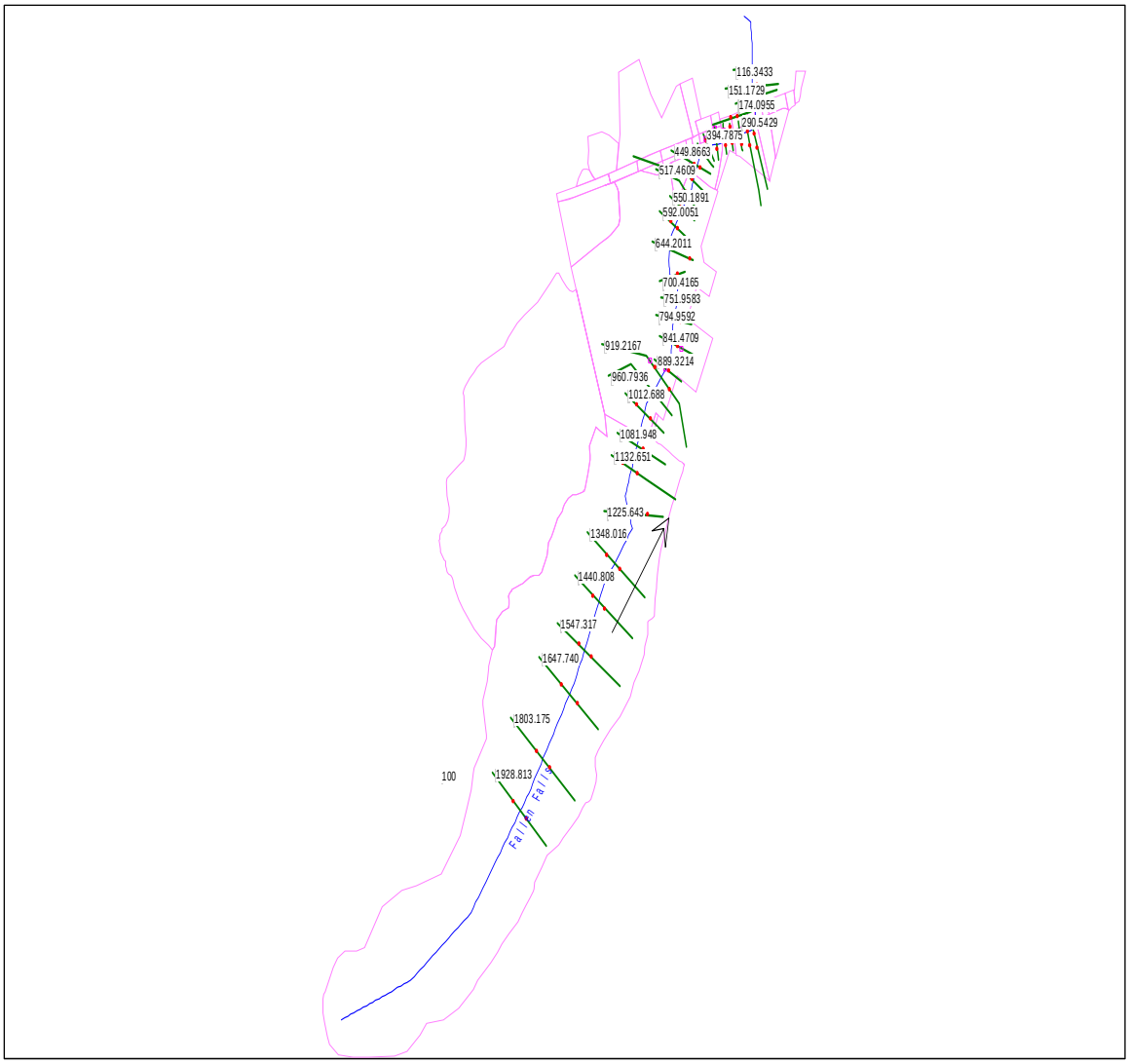

Figure C.2: Schematic of the HEC-RAS Model

HEC-RAS Model Output

Reach	River Sta	Profile	Q Total (m3/s)	Min Ch El (m)	W.S. Elev (m)	E.G. Elev (m)	E.G. Slope (m/m)	Vel Chnl (m/s)	Flow Area (m2)	Top Width (m)
100	1928.813	100 year	1.61	274.54	274.91	274.92	0.010781	0.42	3.79	20.29
100	1928.813	Timmins	2.63	274.54	274.98	274.99	0.011382	0.5	5.29	23.26
100	1803.175	100 year	1.61	273.03	273.23	273.24	0.017197	0.48	3.37	21.44
100	1803.175	Timmins	2.63	273.03	273.29	273.31	0.015923	0.54	4.87	24.3
100	1647.74	100 year	1.61	269.75	269.99	270	0.025712	0.49	3.31	27.66
100	1647.74	Timmins	2.63	269.75	270.03	270.05	0.028885	0.59	4.42	29.83
100	1547.317	100 year	1.61	267.8	268.12	268.13	0.014236	0.47	3.47	20.57
100	1547.317	Timmins	2.63	267.8	268.19	268.21	0.012646	0.52	5.08	23.57
100	1440.808	100 year	1.61	265.5	264.94	264.99	0.093628		1.67	13.19
100	1440.808	Timmins	2.63	265.5	264.97	265.05	0.133656		2.11	14.83
100	1348.016	100 year	1.61	262.64	262.65	262.66	0.011432	0.04	4.31	29.53
100	1348.016	Timmins	2.63	262.64	262.71	262.72	0.01015	0.13	6.15	33.57
100	1225.643	100 year	1.61	259.55	259.65	259.67	0.084956	0.62	2.71	50.05
100	1225.643	Timmins	2.63	259.55	259.66	259.69	0.127419	0.79	3.57	60.52
100	1132.651	100 year	1.61	258.31	259.12	259.12	0.000007	0.03	78.25	215.73
100	1132.651	Timmins	2.63	258.31	259.16	259.16	0.000015	0.04	85.66	216.29
100	1081.948	100 year	1.16	258.38	259.12	259.12	0.000008	0.03	45.75	73.29
100	1081.948	Timmins	2.08	258.38	259.16	259.16	0.000021	0.04	48.23	73.45
100	1012.688	100 year	1.16	259	259.11	259.12	0.040478	0.47	2.63	37.42
100	1012.688	Timmins	2.08	259	259.13	259.15	0.062761	0.65	3.39	40.63
100	960.7936	100 year	2.00	258.82	258.67	258.68	0.004931		9.32	77.42
100	960.7936	Timmins	3.35	258.82	258.73	258.74	0.003978		14.35	89.12
100	919.2167	100 year	2.00	258.25	258.32	258.32	0.019886	0.28	7.48	128.83
100	919.2167	Timmins	3.35	258.25	258.32	258.33	0.049014	0.45	7.8	129.51
100	889.3214	100 year	2.00	256.89	257.09	257.14	0.108315	1.01	2.17	22.87
100	889.3214	Timmins	3.35	256.89	257.11	257.13	0.033663	0.57	6.79	74.96
100	841.4709	100 year	2.00	256.36	256.75	256.75	0.001533	0.19	10.85	47.47
100	841.4709	Timmins	3.35	256.36	256.84	256.84	0.001583	0.22	15.3	52.59
100	794.9592	100 year	2.00	256.24	256.71	256.71	0.000446	0.13	15.56	46.84
100	794.9592	Timmins	3.35	256.24	256.79	256.8	0.000606	0.17	20.16	66.48
100	751.9583	100 year	2.00	256.47	256.60	256.65	0.147397	0.94	2.12	24.4
100	751.9583	Timmins	3.35	256.47	256.64	256.7	0.133159	1.07	3.14	27.69
100	700.4165	100 year	2.00	255.6	256.23	256.23	0.000813	0.19	10.74	29.31
100	700.4165	Timmins	3.35	255.6	256.38	256.38	0.000829	0.22	15.73	38.4

Reach	River Sta	Profile	Q Total (m3/s)	Min Ch El (m)	W.S. Elev (m)	E.G. Elev (m)	E.G. Slope (m/m)	Vel Chnl (m/s)	Flow Area (m2)	Top Width (m)
100	644.2011	100 year	2.00	255.6	256.21	256.21	0.000313	0.12	16.99	43.91
100	644.2011	Timmins	3.35	255.6	256.35	256.35	0.000347	0.14	23.94	51.39
100	592.0051	100 year	2.00	255.5	256.18	256.18	0.000893	0.21	9.87	26.02
100	592.0051	Timmins	3.35	255.5	256.32	256.33	0.000996	0.26	13.89	30.31
100	550.1891	100 year	2.02	254.84	256.17	256.17	0.000144	0.12	20.75	61.1
100	550.1891	Timmins	3.67	254.84	256.31	256.31	0.0002	0.16	29.82	68.4
100	517.4609	100 year	2.02	254.86	256.16	256.16	0.000067	0.09	25.46	57.61
100	517.4609	Timmins	3.67	254.86	256.30	256.3	0.000114	0.13	35.87	96.12
100	483.8649	100 year	2.02	254.84	256.16	256.16	0.000024	0.06	47.87	94.98
100	483.8649	Timmins	3.67	254.84	256.30	256.3	0.000039	0.08	61.83	107.69
100	449.8663	100 year	2.63	256.2	256.15	256.16	0.012751		7.07	52.28
100	449.8663	Timmins	4.58	256.2	256.29	256.3	0.003676	0.12	16.51	83.77
100	415.7941	100 year	2.63	255.23	256.15	256.15	0.000055	0.08	35.93	62.75
100	415.7941	Timmins	4.58	255.23	256.29	256.29	0.000091	0.11	44.49	63.9
100	394.7875	100 year	2.63	255.43	256.14	256.15	0.000991	0.22	12.7	35.37
100	394.7875	Timmins	4.58	255.43	256.28	256.28	0.001123	0.28	17.58	38.38
100	367.7765	100 year	2.63	255.58	256.12	256.12	0.00116	0.23	12.12	38.38
100	367.7765	Timmins	4.58	255.58	256.25	256.25	0.001238	0.28	17.55	45.42
100	340.6502	100 year	2.63	255.5	256.05	256.06	0.006141	0.41	6.34	22.88
100	340.6502	Timmins	4.58	255.5	256.17	256.19	0.006224	0.48	9.5	27.55
100	318.2704	100 year	2.63	255.29	255.97	255.98	0.002254	0.28	9.37	28.86
100	318.2704	Timmins	4.58	255.29	256.08	256.09	0.003027	0.35	12.87	34.64
100	290.5429	100 year	2.63	255.5	255.71	255.77	0.14843	1.07	2.46	23.5
100	290.5429	Timmins	4.58	255.5	255.77	255.83	0.108992	1.13	4.12	37.33
100	266.4075	100 year	2.63	255.1	255.72	255.72	0.000157	0.1	31.2	107.74
100	266.4075	Timmins	4.58	255.1	255.76	255.76	0.00036	0.16	35.1	116.38
100	248.9205	100 year	2.63	254.75	255.72	255.72	0.00003	0.06	57.18	120.47
100	248.9205	Timmins	4.58	254.75	255.76	255.76	0.000076	0.1	61.3	125.55
100	199.2696	100 year	2.63	255.75	255.72	255.72	0.000576		25.64	128.59
100	199.2696	Timmins	4.58	255.75	255.75	255.75	0.001169		29.2	131.31
100	174.0955	100 year	2.63	255.4	255.70	255.7	0.000878	0.16	21.27	120.3
100	174.0955	Timmins	4.58	255.4	255.70	255.71	0.002611	0.28	21.46	120.78
100	151.1729	100 year	2.63	255	255.70	255.7	0.000015	0.04	84.94	170
100	151.1729	Timmins	4.58	255	255.70	255.7	0.000046	0.07	85.03	170
100	116.3433	100 year	2.63	254.75	255.70	255.7	0.000005	0.03	105.16	115.03
100	116.3433	Timmins	4.58	254.75	255.70	255.7	0.000014	0.05	105.16	115.03

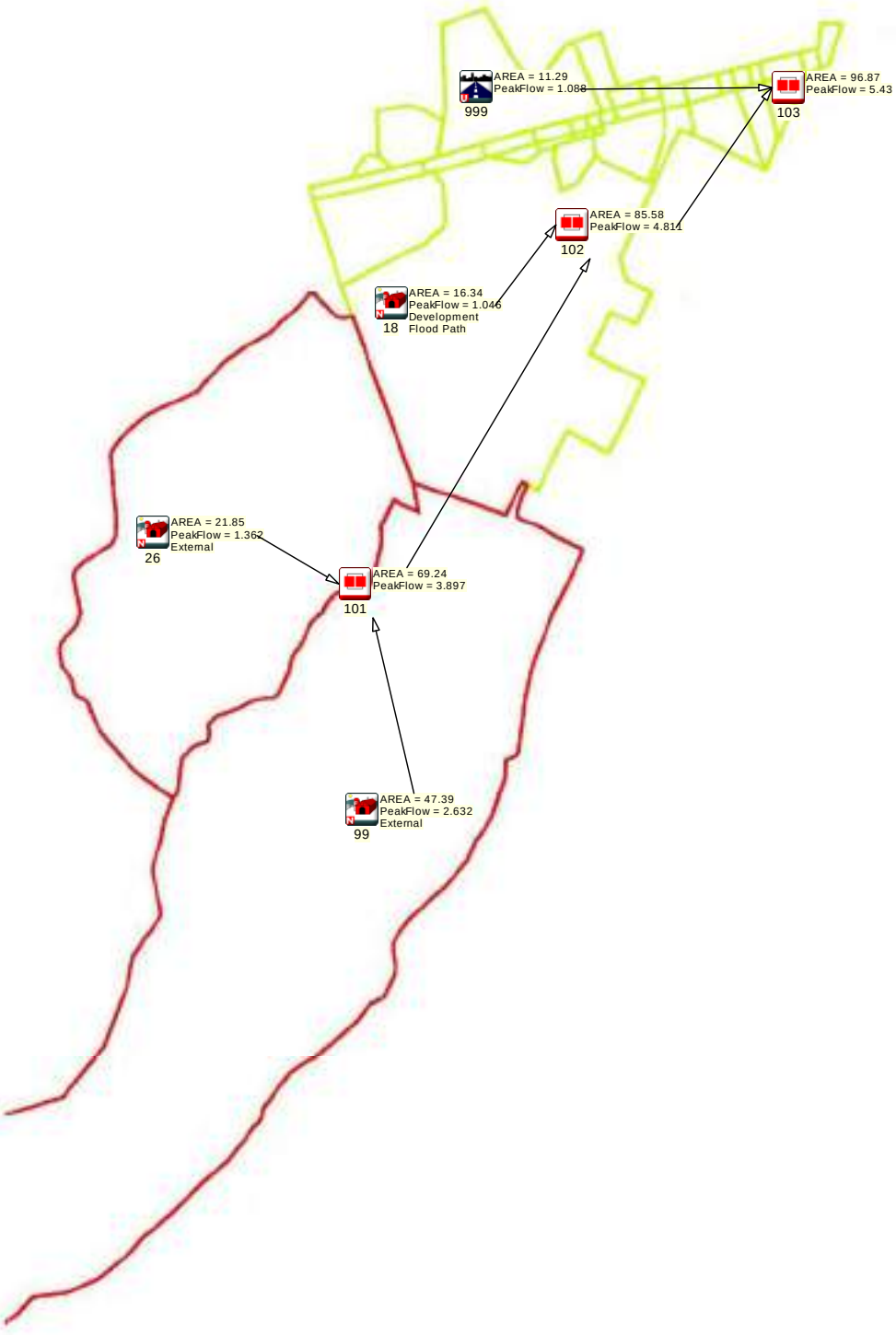

Figure C.3: Schematic of the VO2 Model

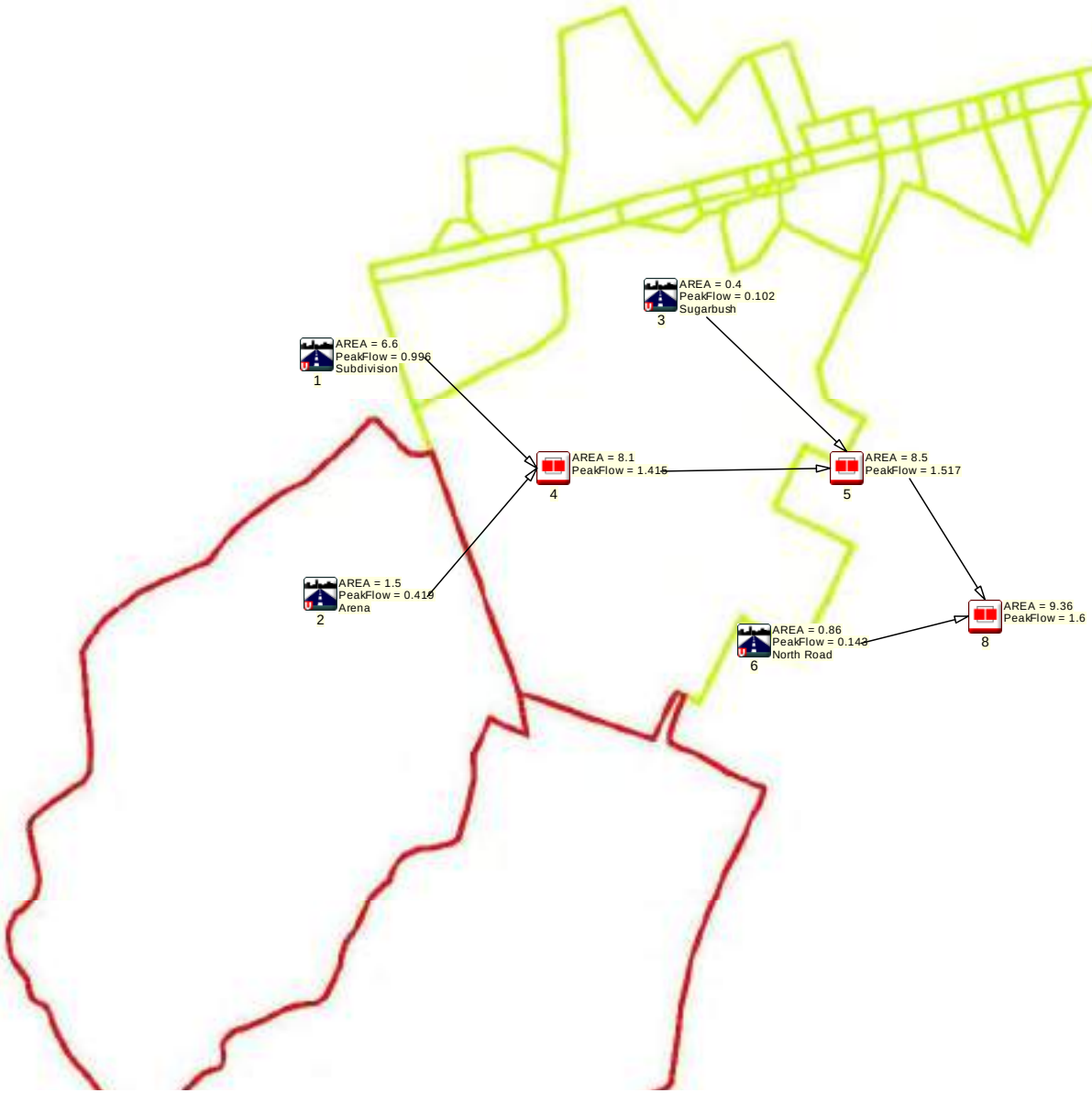

Figure C.4: Schematic of the VO2 Model for New Developments

```
================================================================================================
======

       V    V   I    SSSSS  U   U    A    L
       V    V   I    SS     U   U   A A   L
        V  V    I     SS    U   U  AAAAA  L
        V  V    I      SS   U   U  A   A  L
         VV     I    SSSSS  UUUUU  A   A  LLLLL

        OOO   TTTTT  TTTTT  H   H  Y   Y  M   M   OOO    TM, Version 2.0
       O   O    T      T    H   H   Y Y   MM MM  O   O
       O   O    T      T    H   H    Y    M   M  O   O   Licensed To: Valdor Engineering
        OOO     T      T    H   H    Y    M   M   OOO                VO2-0102

Developed and Distributed by Greenland International Consulting Inc.
Copyright 1996, 2001 Schaeffer & Associates Ltd.
All rights reserved.

                  *****  D E T A I L E D   O U T P U T *****


  Input   filename: C:\Program Files\Visual OTTHYMO v2.0\voin.dat
  Output  filename: S:\Projects\2009\09123\Hydrotechnical\VO2\09123\09123\HEC-RAS Flow.out
  Summary filename: S:\Projects\2009\09123\Hydrotechnical\VO2\09123\09123\HEC-RAS Flow.sum


DATE: 11/27/2009                          TIME: 2:00:40 PM

USER:
```

COMMENTS: **VO2 Model Output for Existing Conditions**

```
------------------------------------------------------------------------------------------------
------
  ***************************
  ** SIMULATION NUMBER:   1 ** 2-year 24-hr Chicago Storm
  ***************************

--------------------
| CHICAGO STORM    |    IDF curve parameters: A= 808.793
| Ptotal= 44.56 mm |                          B=   7.421
--------------------                          C=    .835
                       used in:   INTENSITY =  A / (t + B)^C

                       Duration of storm  = 24.00 hrs
                       Storm time step    = 10.00 min
                       Time to peak ratio =   .33

                TIME    RAIN |  TIME    RAIN |  TIME    RAIN |  TIME    RAIN
                 hrs   mm/hr |   hrs   mm/hr |   hrs   mm/hr |   hrs   mm/hr
                 .17     .32 |  6.17    1.16 | 12.17    1.02 | 18.17     .46
                 .33     .33 |  6.33    1.27 | 12.33     .98 | 18.33     .46
                 .50     .33 |  6.50    1.41 | 12.50     .95 | 18.50     .45
                 .67     .34 |  6.67    1.57 | 12.67     .92 | 18.67     .44
                 .83     .35 |  6.83    1.79 | 12.83     .89 | 18.83     .44
                1.00     .35 |  7.00    2.09 | 13.00     .86 | 19.00     .43
                1.17     .36 |  7.17    2.51 | 13.17     .84 | 19.17     .43
                1.33     .37 |  7.33    3.17 | 13.33     .82 | 19.33     .42
                1.50     .38 |  7.50    4.33 | 13.50     .79 | 19.50     .42
                1.67     .39 |  7.67    6.97 | 13.67     .77 | 19.67     .41
                1.83     .39 |  7.83   18.18 | 13.83     .75 | 19.83     .41
                2.00     .40 |  8.00   74.39 | 14.00     .73 | 20.00     .40
                2.17     .41 |  8.17   24.22 | 14.17     .72 | 20.17     .40
                2.33     .42 |  8.33   12.16 | 14.33     .70 | 20.33     .39
                2.50     .44 |  8.50    8.00 | 14.50     .68 | 20.50     .39
                2.67     .45 |  8.67    5.95 | 14.67     .67 | 20.67     .38
                2.83     .46 |  8.83    4.74 | 14.83     .66 | 20.83     .38
                3.00     .47 |  9.00    3.94 | 15.00     .64 | 21.00     .38
                3.17     .49 |  9.17    3.38 | 15.17     .63 | 21.17     .37
                3.33     .50 |  9.33    2.96 | 15.33     .62 | 21.33     .37
                3.50     .52 |  9.50    2.64 | 15.50     .60 | 21.50     .36
                3.67     .54 |  9.67    2.38 | 15.67     .59 | 21.67     .36
                3.83     .56 |  9.83    2.18 | 15.83     .58 | 21.83     .36
                4.00     .58 | 10.00    2.00 | 16.00     .57 | 22.00     .35
                4.17     .60 | 10.17    1.86 | 16.17     .56 | 22.17     .35
                4.33     .62 | 10.33    1.73 | 16.33     .55 | 22.33     .34
                4.50     .65 | 10.50    1.62 | 16.50     .54 | 22.50     .34
                4.67     .68 | 10.67    1.53 | 16.67     .53 | 22.67     .34
                4.83     .71 | 10.83    1.45 | 16.83     .52 | 22.83     .33
                5.00     .74 | 11.00    1.37 | 17.00     .52 | 23.00     .33
                5.17     .78 | 11.17    1.30 | 17.17     .51 | 23.17     .33
                5.33     .83 | 11.33    1.24 | 17.33     .50 | 23.33     .33
                5.50     .88 | 11.50    1.19 | 17.50     .49 | 23.50     .32
                5.67     .93 | 11.67    1.14 | 17.67     .48 | 23.67     .32
                5.83    1.00 | 11.83    1.10 | 17.83     .48 | 23.83     .32
                6.00    1.07 | 12.00    1.05 | 18.00     .47 | 24.00     .31

------------------------------------------------------------------------------------------------
--------------------
| CALIB            |
| NASHYD    (0026) |   Area    (ha)=  21.85   Curve Number   (CN)= 70.0
|ID= 1 DT=10.0 min |   Ia      (mm)=   8.00   # of Linear Res.(N)= 3.00
--------------------   U.H. Tp(hrs)=    .78

     Unit Hyd Qpeak  (cms)=   1.070

     PEAK FLOW       (cms)=    .165 (i)
     TIME TO PEAK    (hrs)=   9.000
     RUNOFF VOLUME    (mm)=   9.191
     TOTAL RAINFALL   (mm)=  44.560
     RUNOFF COEFFICIENT   =    .206

     (i) PEAK FLOW DOES NOT INCLUDE BASEFLOW IF ANY.

------------------------------------------------------------------------------------------------
--------------------
| CALIB            |
| NASHYD    (0099) |   Area    (ha)=  47.39   Curve Number   (CN)= 73.0
|ID= 1 DT=10.0 min |   Ia      (mm)=   8.00   # of Linear Res.(N)= 3.00
--------------------   U.H. Tp(hrs)=   1.18

     Unit Hyd Qpeak  (cms)=   1.534

     PEAK FLOW       (cms)=    .301 (i)
     TIME TO PEAK    (hrs)=   9.500
     RUNOFF VOLUME    (mm)=  10.242
     TOTAL RAINFALL   (mm)=  44.560
     RUNOFF COEFFICIENT   =    .230

     (i) PEAK FLOW DOES NOT INCLUDE BASEFLOW IF ANY.

------------------------------------------------------------------------------------------------

--------------------
| ADD HYD   (0101) |
|   1 +  2 =  3    |          AREA    QPEAK    TPEAK     R.V.
--------------------           (ha)    (cms)    (hrs)     (mm)
          ID1= 1 (0026):    21.85    .165     9.00     9.19
        + ID2= 2 (0099):    47.39    .301     9.50    10.24
          ================================================
          ID = 3 (0101):    69.24    .448     9.33     9.91

     NOTE:  PEAK FLOWS DO NOT INCLUDE BASEFLOWS IF ANY.

------------------------------------------------------------------------------------------------
--------------------
| CALIB            |
| NASHYD    (0018) |   Area    (ha)=  16.34   Curve Number   (CN)= 65.0
|ID= 1 DT=10.0 min |   Ia      (mm)=   5.00   # of Linear Res.(N)= 3.00
--------------------   U.H. Tp(hrs)=    .59

     Unit Hyd Qpeak  (cms)=   1.058

     PEAK FLOW       (cms)=    .153 (i)
     TIME TO PEAK    (hrs)=   8.667
     RUNOFF VOLUME    (mm)=   8.872
```

```
     TOTAL RAINFALL   (mm)=  44.560
     RUNOFF COEFFICIENT   =    .199

     (i) PEAK FLOW DOES NOT INCLUDE BASEFLOW IF ANY.

--------------------------------------------------------------------------------

--------------------
| ADD HYD   (0102) |
|   1 +  2 =  3    |         AREA    QPEAK    TPEAK     R.V.
--------------------         (ha)    (cms)    (hrs)     (mm)
          ID1= 1 (0101):    69.24    .448     9.33     9.91
        + ID2= 2 (0018):    16.34    .153     8.67     8.87
          ================================================
          ID = 3 (0102):    85.58    .567     9.00     9.71

     NOTE:  PEAK FLOWS DO NOT INCLUDE BASEFLOWS IF ANY.

--------------------------------------------------------------------------------
--------------------
| CALIB            |
| STANDHYD  (0999) |   Area    (ha)=  11.29
|ID= 1 DT= 5.0 min |   Total Imp(%)=  50.00   Dir. Conn.(%)=  35.00
--------------------
                          IMPERVIOUS    PERVIOUS (i)
     Surface Area     (ha)=       5.64         5.64
     Dep. Storage     (mm)=       1.00         5.00
     Average Slope     (%)=       1.00         2.00
     Length            (m)=     274.30        40.00
     Mannings n           =       .013         .250

         NOTE:  RAINFALL WAS TRANSFORMED TO   5.0 MIN. TIME STEP.
```

---- TRANSFORMED HYETOGRAPH ----

TIME hrs	RAIN mm/hr	TIME hrs	RAIN mm/hr	TIME hrs	RAIN mm/hr	TIME hrs	RAIN mm/hr
.083	.32	6.083	1.16	12.083	1.02	18.08	.46
.167	.32	6.167	1.16	12.167	1.02	18.17	.46
.250	.33	6.250	1.27	12.250	.98	18.25	.46
.333	.33	6.333	1.27	12.333	.98	18.33	.46
.417	.33	6.417	1.41	12.417	.95	18.42	.45
.500	.33	6.500	1.41	12.500	.95	18.50	.45
.583	.34	6.583	1.57	12.583	.92	18.58	.44
.667	.34	6.667	1.57	12.667	.92	18.67	.44
.750	.35	6.750	1.79	12.750	.89	18.75	.44
.833	.35	6.833	1.79	12.833	.89	18.83	.44
.917	.35	6.917	2.09	12.917	.86	18.92	.43
1.000	.35	7.000	2.09	13.000	.86	19.00	.43
1.083	.36	7.083	2.51	13.083	.84	19.08	.43
1.167	.36	7.167	2.51	13.167	.84	19.17	.43
1.250	.37	7.250	3.17	13.250	.82	19.25	.42
1.333	.37	7.333	3.17	13.333	.82	19.33	.42
1.417	.38	7.417	4.33	13.417	.79	19.42	.42
1.500	.38	7.500	4.33	13.500	.79	19.50	.42
1.583	.39	7.583	6.97	13.583	.77	19.58	.41
1.667	.39	7.667	6.97	13.667	.77	19.67	.41
1.750	.39	7.750	18.18	13.750	.75	19.75	.41
1.833	.39	7.833	18.18	13.833	.75	19.83	.41
1.917	.40	7.917	74.39	13.917	.73	19.92	.40
2.000	.40	8.000	74.39	14.000	.73	20.00	.40
2.083	.41	8.083	24.22	14.083	.72	20.08	.40
2.167	.41	8.167	24.22	14.167	.72	20.17	.40
2.250	.42	8.250	12.16	14.250	.70	20.25	.39
2.333	.42	8.333	12.16	14.333	.70	20.33	.39
2.417	.44	8.417	8.00	14.417	.68	20.42	.39
2.500	.44	8.500	8.00	14.500	.68	20.50	.39
2.583	.45	8.583	5.95	14.583	.67	20.58	.38
2.667	.45	8.667	5.95	14.667	.67	20.67	.38
2.750	.46	8.750	4.74	14.750	.66	20.75	.38
2.833	.46	8.833	4.74	14.833	.66	20.83	.38
2.917	.47	8.917	3.94	14.917	.64	20.92	.38
3.000	.47	9.000	3.94	15.000	.64	21.00	.38
3.083	.49	9.083	3.38	15.083	.63	21.08	.37
3.167	.49	9.167	3.38	15.167	.63	21.17	.37
3.250	.50	9.250	2.96	15.250	.62	21.25	.37
3.333	.50	9.333	2.96	15.333	.62	21.33	.37
3.417	.52	9.417	2.64	15.417	.60	21.42	.36
3.500	.52	9.500	2.64	15.500	.60	21.50	.36
3.583	.54	9.583	2.38	15.583	.59	21.58	.36
3.667	.54	9.667	2.38	15.667	.59	21.67	.36
3.750	.56	9.750	2.18	15.750	.58	21.75	.36
3.833	.56	9.833	2.18	15.833	.58	21.83	.36
3.917	.58	9.917	2.00	15.917	.57	21.92	.35
4.000	.58	10.000	2.00	16.000	.57	22.00	.35
4.083	.60	10.083	1.86	16.083	.56	22.08	.35
4.167	.60	10.167	1.86	16.167	.56	22.17	.35
4.250	.62	10.250	1.73	16.250	.55	22.25	.34
4.333	.62	10.333	1.73	16.333	.55	22.33	.34
4.417	.65	10.417	1.62	16.417	.54	22.42	.34
4.500	.65	10.500	1.62	16.500	.54	22.50	.34
4.583	.68	10.583	1.53	16.583	.53	22.58	.34
4.667	.68	10.667	1.53	16.667	.53	22.67	.34
4.750	.71	10.750	1.45	16.750	.52	22.75	.33
4.833	.71	10.833	1.45	16.833	.52	22.83	.33
4.917	.74	10.917	1.37	16.917	.52	22.92	.33
5.000	.74	11.000	1.37	17.000	.52	23.00	.33
5.083	.78	11.083	1.30	17.083	.51	23.08	.33
5.167	.78	11.167	1.30	17.167	.51	23.17	.33
5.250	.83	11.250	1.24	17.250	.50	23.25	.33
5.333	.83	11.333	1.24	17.333	.50	23.33	.33
5.417	.88	11.417	1.19	17.417	.49	23.42	.32
5.500	.88	11.500	1.19	17.500	.49	23.50	.32
5.583	.93	11.583	1.14	17.583	.48	23.58	.32
5.667	.93	11.667	1.14	17.667	.48	23.67	.32
5.750	1.00	11.750	1.10	17.750	.48	23.75	.32
5.833	1.00	11.833	1.10	17.833	.48	23.83	.32
5.917	1.07	11.917	1.05	17.917	.47	23.92	.31
6.000	1.07	12.000	1.05	18.000	.47	24.00	.31

```
     Max.Eff.Inten.(mm/hr)=      74.39        16.40
                over (min)        5.00        20.00
     Storage Coeff.  (min)=       5.27 (ii)   19.81 (ii)
     Unit Hyd. Tpeak (min)=       5.00        20.00
     Unit Hyd. peak  (cms)=        .21          .06
                                                        *TOTALS*
     PEAK FLOW       (cms)=        .72          .14          .770 (iii)
     TIME TO PEAK    (hrs)=       8.00         8.25         8.00
     RUNOFF VOLUME    (mm)=      43.56        11.36        22.63
     TOTAL RAINFALL   (mm)=      44.56        44.56        44.56
     RUNOFF COEFFICIENT   =        .98          .25          .51


       (i) CN PROCEDURE SELECTED FOR PERVIOUS LOSSES:
            CN*  =  65.0    Ia = Dep. Storage  (Above)
      (ii) TIME STEP (DT) SHOULD BE SMALLER OR EQUAL
           THAN THE STORAGE COEFFICIENT.
     (iii) PEAK FLOW DOES NOT INCLUDE BASEFLOW IF ANY.

--------------------------------------------------------------------------------

--------------------
| ADD HYD   (0103) |
|   1 +  2 =  3    |         AREA    QPEAK    TPEAK     R.V.
--------------------         (ha)    (cms)    (hrs)     (mm)
          ID1= 1 (0102):    85.58    .567     9.00     9.71
        + ID2= 2 (0999):    11.29    .770     8.00    22.63
          ================================================
          ID = 3 (0103):    96.87    .837     8.00    11.22

     NOTE:  PEAK FLOWS DO NOT INCLUDE BASEFLOWS IF ANY.

--------------------------------------------------------------------------------
  ****************************
  ** SIMULATION NUMBER:   2 ** 5-year 24-hr Chicago Storm
  ****************************

--------------------
| CHICAGO STORM    |    IDF curve parameters: A=1248.043
| Ptotal= 58.51 mm |                          B=   9.759
--------------------                          C=    .857
```

used in: INTENSITY = A / (t + B)^C

Duration of storm = 24.00 hrs
Storm time step = 10.00 min
Time to peak ratio = .33

TIME hrs	RAIN mm/hr	TIME hrs	RAIN mm/hr	TIME hrs	RAIN mm/hr	TIME hrs	RAIN mm/hr
.17	.37	6.17	1.44	12.17	1.24	18.17	.54
.33	.38	6.33	1.58	12.33	1.20	18.33	.54
.50	.39	6.50	1.76	12.50	1.16	18.50	.53
.67	.39	6.67	1.98	12.67	1.12	18.67	.52
.83	.40	6.83	2.28	12.83	1.08	18.83	.51
1.00	.41	7.00	2.69	13.00	1.05	19.00	.51
1.17	.42	7.17	3.28	13.17	1.01	19.17	.50
1.33	.43	7.33	4.21	13.33	.98	19.33	.49
1.50	.44	7.50	5.91	13.50	.96	19.50	.49
1.67	.45	7.67	9.81	13.67	.93	19.67	.48
1.83	.46	7.83	26.20	13.83	.91	19.83	.47
2.00	.47	8.00	96.77	14.00	.88	20.00	.47
2.17	.48	8.17	34.89	14.17	.86	20.17	.46
2.33	.50	8.33	17.55	14.33	.84	20.33	.46
2.50	.51	8.50	11.36	14.50	.82	20.50	.45
2.67	.52	8.67	8.29	14.67	.80	20.67	.45
2.83	.54	8.83	6.50	14.83	.78	20.83	.44
3.00	.56	9.00	5.33	15.00	.76	21.00	.44
3.17	.57	9.17	4.52	15.17	.75	21.17	.43
3.33	.59	9.33	3.92	15.33	.73	21.33	.43
3.50	.61	9.50	3.46	15.50	.72	21.50	.42
3.67	.63	9.67	3.10	15.67	.70	21.67	.42
3.83	.66	9.83	2.81	15.83	.69	21.83	.41
4.00	.68	10.00	2.57	16.00	.68	22.00	.41
4.17	.71	10.17	2.37	16.17	.66	22.17	.40
4.33	.74	10.33	2.20	16.33	.65	22.33	.40
4.50	.77	10.50	2.05	16.50	.64	22.50	.40
4.67	.81	10.67	1.92	16.67	.63	22.67	.39
4.83	.85	10.83	1.81	16.83	.62	22.83	.39
5.00	.89	11.00	1.71	17.00	.61	23.00	.38
5.17	.94	11.17	1.62	17.17	.60	23.17	.38
5.33	1.00	11.33	1.54	17.33	.59	23.33	.38
5.50	1.06	11.50	1.47	17.50	.58	23.50	.37
5.67	1.14	11.67	1.41	17.67	.57	23.67	.37
5.83	1.22	11.83	1.35	17.83	.56	23.83	.37
6.00	1.32	12.00	1.29	18.00	.55	24.00	.36

CALIB	
NASHYD (0026)	Area (ha)= 21.85 Curve Number (CN)= 70.0
ID= 1 DT=10.0 min	Ia (mm)= 8.00 # of Linear Res.(N)= 3.00
	U.H. Tp(hrs)= .78

Unit Hyd Qpeak (cms)= 1.070

PEAK FLOW (cms)= .321 (i)
TIME TO PEAK (hrs)= 9.000
RUNOFF VOLUME (mm)= 16.005
TOTAL RAINFALL (mm)= 58.507
RUNOFF COEFFICIENT = .274

(i) PEAK FLOW DOES NOT INCLUDE BASEFLOW IF ANY.

CALIB	
NASHYD (0099)	Area (ha)= 47.39 Curve Number (CN)= 73.0
ID= 1 DT=10.0 min	Ia (mm)= 8.00 # of Linear Res.(N)= 3.00
	U.H. Tp(hrs)= 1.18

Unit Hyd Qpeak (cms)= 1.534

PEAK FLOW (cms)= .575 (i)
TIME TO PEAK (hrs)= 9.500
RUNOFF VOLUME (mm)= 17.659
TOTAL RAINFALL (mm)= 58.507
RUNOFF COEFFICIENT = .302

(i) PEAK FLOW DOES NOT INCLUDE BASEFLOW IF ANY.

ADD HYD (0101)		AREA (ha)	QPEAK (cms)	TPEAK (hrs)	R.V. (mm)
1 + 2 = 3	ID1= 1 (0026):	21.85	.321	9.00	16.00
	+ ID2= 2 (0099):	47.39	.575	9.50	17.66
	ID = 3 (0101):	69.24	.866	9.17	17.14

NOTE: PEAK FLOWS DO NOT INCLUDE BASEFLOWS IF ANY.

CALIB	
NASHYD (0018)	Area (ha)= 16.34 Curve Number (CN)= 65.0
ID= 1 DT=10.0 min	Ia (mm)= 5.00 # of Linear Res.(N)= 3.00
	U.H. Tp(hrs)= .59

Unit Hyd Qpeak (cms)= 1.058

PEAK FLOW (cms)= .282 (i)
TIME TO PEAK (hrs)= 8.667
RUNOFF VOLUME (mm)= 15.040
TOTAL RAINFALL (mm)= 58.507
RUNOFF COEFFICIENT = .257

(i) PEAK FLOW DOES NOT INCLUDE BASEFLOW IF ANY.

ADD HYD (0102)		AREA (ha)	QPEAK (cms)	TPEAK (hrs)	R.V. (mm)
1 + 2 = 3	ID1= 1 (0101):	69.24	.866	9.17	17.14
	+ ID2= 2 (0018):	16.34	.282	8.67	15.04
	ID = 3 (0102):	85.58	1.090	9.00	16.74

NOTE: PEAK FLOWS DO NOT INCLUDE BASEFLOWS IF ANY.

CALIB	
STANDHYD (0999)	Area (ha)= 11.29
ID= 1 DT= 5.0 min	Total Imp(%)= 50.00 Dir. Conn.(%)= 35.00

	IMPERVIOUS	PERVIOUS (i)
Surface Area (ha)=	5.64	5.64
Dep. Storage (mm)=	1.00	5.00
Average Slope (%)=	1.00	2.00
Length (m)=	274.30	40.00
Mannings n =	.013	.250

NOTE: RAINFALL WAS TRANSFORMED TO 5.0 MIN. TIME STEP.

---- TRANSFORMED HYETOGRAPH ----

TIME hrs	RAIN mm/hr	TIME hrs	RAIN mm/hr	TIME hrs	RAIN mm/hr	TIME hrs	RAIN mm/hr
.083	.37	6.083	1.44	12.083	1.24	18.08	.54
.167	.37	6.167	1.44	12.167	1.24	18.17	.54
.250	.38	6.250	1.58	12.250	1.20	18.25	.54
.333	.38	6.333	1.58	12.333	1.20	18.33	.54
.417	.39	6.417	1.76	12.417	1.16	18.42	.53
.500	.39	6.500	1.76	12.500	1.16	18.50	.53
.583	.39	6.583	1.98	12.583	1.12	18.58	.52
.667	.39	6.667	1.98	12.667	1.12	18.67	.52
.750	.40	6.750	2.28	12.750	1.08	18.75	.51
.833	.40	6.833	2.28	12.833	1.08	18.83	.51

.917	.41	6.917	2.69	12.917	1.05	18.92	.51
1.000	.41	7.000	2.69	13.000	1.05	19.00	.51
1.083	.42	7.083	3.28	13.083	1.01	19.08	.50
1.167	.42	7.167	3.28	13.167	1.01	19.17	.50
1.250	.43	7.250	4.21	13.250	.98	19.25	.49
1.333	.43	7.333	4.21	13.333	.98	19.33	.49
1.417	.44	7.417	5.91	13.417	.96	19.42	.49
1.500	.44	7.500	5.91	13.500	.96	19.50	.49
1.583	.45	7.583	9.81	13.583	.93	19.58	.48
1.667	.45	7.667	9.81	13.667	.93	19.67	.48
1.750	.46	7.750	26.20	13.750	.91	19.75	.47
1.833	.46	7.833	26.21	13.833	.91	19.83	.47
1.917	.47	7.917	96.77	13.917	.88	19.92	.47
2.000	.47	8.000	96.77	14.000	.88	20.00	.47
2.083	.48	8.083	34.89	14.083	.86	20.08	.46
2.167	.48	8.167	34.89	14.167	.86	20.17	.46
2.250	.50	8.250	17.55	14.250	.84	20.25	.46
2.333	.50	8.333	17.55	14.333	.84	20.33	.46
2.417	.51	8.417	11.36	14.417	.82	20.42	.45
2.500	.51	8.500	11.36	14.500	.82	20.50	.45
2.583	.52	8.583	8.29	14.583	.80	20.58	.45
2.667	.52	8.667	8.29	14.667	.80	20.67	.45
2.750	.54	8.750	6.50	14.750	.78	20.75	.44
2.833	.54	8.833	6.50	14.833	.78	20.83	.44
2.917	.56	8.917	5.33	14.917	.76	20.92	.44
3.000	.56	9.000	5.33	15.000	.76	21.00	.44
3.083	.57	9.083	4.52	15.083	.75	21.08	.43
3.167	.57	9.167	4.52	15.167	.75	21.17	.43
3.250	.59	9.250	3.92	15.250	.73	21.25	.43
3.333	.59	9.333	3.92	15.333	.73	21.33	.43
3.417	.61	9.417	3.46	15.417	.72	21.42	.42
3.500	.61	9.500	3.46	15.500	.72	21.50	.42
3.583	.63	9.583	3.10	15.583	.70	21.58	.42
3.667	.63	9.667	3.10	15.667	.70	21.67	.42
3.750	.66	9.750	2.81	15.750	.69	21.75	.41
3.833	.66	9.833	2.81	15.833	.69	21.83	.41
3.917	.68	9.917	2.57	15.917	.68	21.92	.41
4.000	.68	10.000	2.57	16.000	.68	22.00	.41
4.083	.71	10.083	2.37	16.083	.66	22.08	.40
4.167	.71	10.167	2.37	16.167	.66	22.17	.40
4.250	.74	10.250	2.20	16.250	.65	22.25	.40
4.333	.74	10.333	2.20	16.333	.65	22.33	.40
4.417	.77	10.417	2.05	16.417	.64	22.42	.40
4.500	.77	10.500	2.05	16.500	.64	22.50	.40
4.583	.81	10.583	1.92	16.583	.63	22.58	.39
4.667	.81	10.667	1.92	16.667	.63	22.67	.39
4.750	.85	10.750	1.81	16.750	.62	22.75	.39
4.833	.85	10.833	1.81	16.833	.62	22.83	.39
4.917	.89	10.917	1.71	16.917	.61	22.92	.38
5.000	.89	11.000	1.71	17.000	.61	23.00	.38
5.083	.94	11.083	1.62	17.083	.60	23.08	.38
5.167	.94	11.167	1.62	17.167	.60	23.17	.38
5.250	1.00	11.250	1.54	17.250	.59	23.25	.38
5.333	1.00	11.333	1.54	17.333	.59	23.33	.38
5.417	1.06	11.417	1.47	17.417	.58	23.42	.37
5.500	1.06	11.500	1.47	17.500	.58	23.50	.37
5.583	1.14	11.583	1.41	17.583	.57	23.58	.37
5.667	1.14	11.667	1.41	17.667	.57	23.67	.37
5.750	1.22	11.750	1.35	17.750	.56	23.75	.37
5.833	1.22	11.833	1.35	17.833	.56	23.83	.37
5.917	1.32	11.917	1.29	17.917	.55	23.92	.36
6.000	1.32	12.000	1.29	18.000	.55	24.00	.36

Max.Eff.Inten.(mm/hr)=	96.77	28.40	
over (min)	5.00	20.00	
Storage Coeff. (min)=	4.74 (ii)	16.42 (ii)	
Unit Hyd. Tpeak (min)=	5.00	20.00	
Unit Hyd. peak (cms)=	.22	.06	
			TOTALS
PEAK FLOW (cms)=	.97	.27	1.066 (iii)
TIME TO PEAK (hrs)=	8.00	8.25	8.00
RUNOFF VOLUME (mm)=	57.51	18.69	32.27
TOTAL RAINFALL (mm)=	58.51	58.51	58.51
RUNOFF COEFFICIENT =	.98	.32	.55

***** WARNING: STORAGE COEFF. IS SMALLER THAN TIME STEP!

(i) CN PROCEDURE SELECTED FOR PERVIOUS LOSSES:
CN* = 65.0 Ia = Dep. Storage (Above)
(ii) TIME STEP (DT) SHOULD BE SMALLER OR EQUAL
THAN THE STORAGE COEFFICIENT.
(iii) PEAK FLOW DOES NOT INCLUDE BASEFLOW IF ANY.

ADD HYD (0103)		AREA (ha)	QPEAK (cms)	TPEAK (hrs)	R.V. (mm)
1 + 2 = 3	ID1= 1 (0102):	85.58	1.090	9.00	16.74
	+ ID2= 2 (0999):	11.29	1.066	8.00	32.27
	ID = 3 (0103):	96.87	1.257	8.83	18.55

NOTE: PEAK FLOWS DO NOT INCLUDE BASEFLOWS IF ANY.

** SIMULATION NUMBER: 3 ** **10-year 24-hr Chicago Storm**

CHICAGO STORM	Ptotal= 68.67 mm

IDF curve parameters: A=1486.840
B= 10.440
C= .859
used in: INTENSITY = A / (t + B)^C

Duration of storm = 24.00 hrs
Storm time step = 10.00 min
Time to peak ratio = .33

TIME hrs	RAIN mm/hr	TIME hrs	RAIN mm/hr	TIME hrs	RAIN mm/hr	TIME hrs	RAIN mm/hr
.17	.43	6.17	1.69	12.17	1.46	18.17	.63
.33	.44	6.33	1.86	12.33	1.40	18.33	.62
.50	.45	6.50	2.07	12.50	1.35	18.50	.61
.67	.46	6.67	2.34	12.67	1.31	18.67	.61
.83	.47	6.83	2.69	12.83	1.26	18.83	.60
1.00	.48	7.00	3.18	13.00	1.22	19.00	.59
1.17	.49	7.17	3.88	13.17	1.19	19.17	.58
1.33	.50	7.33	5.01	13.33	1.15	19.33	.57
1.50	.51	7.50	7.04	13.50	1.12	19.50	.57
1.67	.52	7.67	11.74	13.67	1.09	19.67	.56
1.83	.53	7.83	31.19	13.83	1.06	19.83	.55
2.00	.55	8.00	111.32	14.00	1.03	20.00	.54
2.17	.56	8.17	41.43	14.17	1.00	20.17	.54
2.33	.58	8.33	21.00	14.33	.98	20.33	.53
2.50	.59	8.50	13.59	14.50	.96	20.50	.52
2.67	.61	8.67	9.91	14.67	.93	20.67	.52
2.83	.63	8.83	7.76	14.83	.91	20.83	.51
3.00	.65	9.00	6.35	15.00	.89	21.00	.51
3.17	.67	9.17	5.37	15.17	.87	21.17	.50
3.33	.69	9.33	4.66	15.33	.85	21.33	.50
3.50	.71	9.50	4.11	15.50	.84	21.50	.49
3.67	.74	9.67	3.67	15.67	.82	21.67	.48
3.83	.77	9.83	3.32	15.83	.80	21.83	.48
4.00	.80	10.00	3.04	16.00	.79	22.00	.47
4.17	.83	10.17	2.80	16.17	.77	22.17	.47
4.33	.86	10.33	2.59	16.33	.76	22.33	.46
4.50	.90	10.50	2.42	16.50	.75	22.50	.46
4.67	.94	10.67	2.26	16.67	.73	22.67	.45
4.83	.99	10.83	2.13	16.83	.72	22.83	.45
5.00	1.04	11.00	2.01	17.00	.71	23.00	.45
5.17	1.10	11.17	1.91	17.17	.70	23.17	.44
5.33	1.17	11.33	1.81	17.33	.68	23.33	.44
5.50	1.24	11.50	1.73	17.50	.67	23.50	.43
5.67	1.33	11.67	1.65	17.67	.66	23.67	.43
5.83	1.43	11.83	1.58	17.83	.65	23.83	.42
6.00	1.55	12.00	1.52	18.00	.64	24.00	.42

```
--------------------------------------------------------------------------------
--------------------
| CALIB            |
| NASHYD    (0026) |   Area    (ha)=  21.85   Curve Number   (CN)= 70.0
|ID= 1 DT=10.0 min |   Ia      (mm)=   8.00   # of Linear Res.(N)= 3.00
--------------------   U.H. Tp(hrs)=    .78

     Unit Hyd Qpeak  (cms)=   1.070

     PEAK FLOW       (cms)=    .448 (i)
     TIME TO PEAK    (hrs)=   8.833
     RUNOFF VOLUME    (mm)=  21.707
     TOTAL RAINFALL   (mm)=  68.666
     RUNOFF COEFFICIENT   =    .316

     (i) PEAK FLOW DOES NOT INCLUDE BASEFLOW IF ANY.

--------------------------------------------------------------------------------
--------------------
| CALIB            |
| NASHYD    (0099) |   Area    (ha)=  47.39   Curve Number   (CN)= 73.0
|ID= 1 DT=10.0 min |   Ia      (mm)=   8.00   # of Linear Res.(N)= 3.00
--------------------   U.H. Tp(hrs)=   1.18

     Unit Hyd Qpeak  (cms)=   1.534

     PEAK FLOW       (cms)=    .796 (i)
     TIME TO PEAK    (hrs)=   9.333
     RUNOFF VOLUME    (mm)=  23.804
     TOTAL RAINFALL   (mm)=  68.666
     RUNOFF COEFFICIENT   =    .347

     (i) PEAK FLOW DOES NOT INCLUDE BASEFLOW IF ANY.

--------------------------------------------------------------------------------

--------------------
| ADD HYD   (0101) |
|   1 +  2 =  3    |         AREA    QPEAK    TPEAK     R.V.
--------------------          (ha)    (cms)    (hrs)     (mm)
         ID1= 1 (0026):    21.85    .448     8.83    21.71
       + ID2= 2 (0099):    47.39    .796     9.33    23.80
         ================================================
         ID = 3 (0101):    69.24   1.203     9.17    23.14

     NOTE:  PEAK FLOWS DO NOT INCLUDE BASEFLOWS IF ANY.

--------------------------------------------------------------------------------
--------------------
| CALIB            |
| NASHYD    (0018) |   Area    (ha)=  16.34   Curve Number   (CN)= 65.0
|ID= 1 DT=10.0 min |   Ia      (mm)=   5.00   # of Linear Res.(N)= 3.00
--------------------   U.H. Tp(hrs)=    .59

     Unit Hyd Qpeak  (cms)=   1.058

     PEAK FLOW       (cms)=    .385 (i)
     TIME TO PEAK    (hrs)=   8.667
     RUNOFF VOLUME    (mm)=  20.215
     TOTAL RAINFALL   (mm)=  68.666
     RUNOFF COEFFICIENT   =    .294

     (i) PEAK FLOW DOES NOT INCLUDE BASEFLOW IF ANY.

--------------------------------------------------------------------------------

--------------------
| ADD HYD   (0102) |
|   1 +  2 =  3    |         AREA    QPEAK    TPEAK     R.V.
--------------------          (ha)    (cms)    (hrs)     (mm)
         ID1= 1 (0101):    69.24   1.203     9.17    23.14
       + ID2= 2 (0018):    16.34    .385     8.67    20.21
         ================================================
         ID = 3 (0102):    85.58   1.511     9.00    22.58

     NOTE:  PEAK FLOWS DO NOT INCLUDE BASEFLOWS IF ANY.
```

```
--------------------------------------------------------------------------------
--------------------
| CALIB            |
| STANDHYD  (0999) |   Area    (ha)=  11.29
|ID= 1 DT= 5.0 min |   Total Imp(%)=  50.00   Dir. Conn.(%)=  35.00
--------------------

                          IMPERVIOUS    PERVIOUS (i)
     Surface Area     (ha)=      5.64         5.64
     Dep. Storage     (mm)=      1.00         5.00
     Average Slope     (%)=      1.00         2.00
     Length            (m)=    274.30        40.00
     Mannings n           =      .013         .250

         NOTE:  RAINFALL WAS TRANSFORMED TO   5.0 MIN. TIME STEP.

                    ---- TRANSFORMED HYETOGRAPH ----
  TIME    RAIN |  TIME    RAIN |  TIME    RAIN |  TIME    RAIN
   hrs   mm/hr |   hrs   mm/hr |   hrs   mm/hr |   hrs   mm/hr
  .083     .43 | 6.083    1.69 |12.083    1.46 | 18.08     .63
  .167     .43 | 6.167    1.69 |12.167    1.46 | 18.17     .63
  .250     .44 | 6.250    1.86 |12.250    1.40 | 18.25     .62
  .333     .44 | 6.333    1.86 |12.333    1.40 | 18.33     .62
  .417     .45 | 6.417    2.07 |12.417    1.35 | 18.42     .61
  .500     .45 | 6.500    2.07 |12.500    1.35 | 18.50     .61
  .583     .46 | 6.583    2.34 |12.583    1.31 | 18.58     .61
  .667     .46 | 6.667    2.34 |12.667    1.31 | 18.67     .61
  .750     .47 | 6.750    2.69 |12.750    1.26 | 18.75     .60
  .833     .47 | 6.833    2.69 |12.833    1.26 | 18.83     .60
  .917     .48 | 6.917    3.18 |12.917    1.22 | 18.92     .59
 1.000     .48 | 7.000    3.18 |13.000    1.22 | 19.00     .59
 1.083     .49 | 7.083    3.88 |13.083    1.19 | 19.08     .58
 1.167     .49 | 7.167    3.88 |13.167    1.19 | 19.17     .58
 1.250     .50 | 7.250    5.01 |13.250    1.15 | 19.25     .57
 1.333     .50 | 7.333    5.01 |13.333    1.15 | 19.33     .57
 1.417     .51 | 7.417    7.04 |13.417    1.12 | 19.42     .57
 1.500     .51 | 7.500    7.04 |13.500    1.12 | 19.50     .57
 1.583     .52 | 7.583   11.74 |13.583    1.09 | 19.58     .56
 1.667     .52 | 7.667   11.74 |13.667    1.09 | 19.67     .56
 1.750     .53 | 7.750   31.19 |13.750    1.06 | 19.75     .55
 1.833     .53 | 7.833   31.20 |13.833    1.06 | 19.83     .55
 1.917     .55 | 7.917  111.32 |13.917    1.03 | 19.92     .54
 2.000     .55 | 8.000  111.31 |14.000    1.03 | 20.00     .54
 2.083     .56 | 8.083   41.43 |14.083    1.00 | 20.08     .54
 2.167     .56 | 8.167   41.43 |14.167    1.00 | 20.17     .54
 2.250     .58 | 8.250   21.00 |14.250     .98 | 20.25     .53
 2.333     .58 | 8.333   21.00 |14.333     .98 | 20.33     .53
 2.417     .59 | 8.417   13.59 |14.417     .96 | 20.42     .52
 2.500     .59 | 8.500   13.59 |14.500     .96 | 20.50     .52
 2.583     .61 | 8.583    9.91 |14.583     .93 | 20.58     .52
 2.667     .61 | 8.667    9.91 |14.667     .93 | 20.67     .52
 2.750     .63 | 8.750    7.76 |14.750     .91 | 20.75     .51
 2.833     .63 | 8.833    7.76 |14.833     .91 | 20.83     .51
 2.917     .65 | 8.917    6.35 |14.917     .89 | 20.92     .51
 3.000     .65 | 9.000    6.35 |15.000     .89 | 21.00     .51
 3.083     .67 | 9.083    5.37 |15.083     .87 | 21.08     .50
 3.167     .67 | 9.167    5.37 |15.167     .87 | 21.17     .50
 3.250     .69 | 9.250    4.66 |15.250     .85 | 21.25     .50
 3.333     .69 | 9.333    4.66 |15.333     .85 | 21.33     .50
 3.417     .71 | 9.417    4.11 |15.417     .84 | 21.42     .49
 3.500     .71 | 9.500    4.11 |15.500     .84 | 21.50     .49
 3.583     .74 | 9.583    3.67 |15.583     .82 | 21.58     .48
 3.667     .74 | 9.667    3.67 |15.667     .82 | 21.67     .48
 3.750     .77 | 9.750    3.32 |15.750     .80 | 21.75     .48
 3.833     .77 | 9.833    3.32 |15.833     .80 | 21.83     .48
 3.917     .80 | 9.917    3.04 |15.917     .79 | 21.92     .47
 4.000     .80 |10.000    3.04 |16.000     .79 | 22.00     .47
 4.083     .83 |10.083    2.80 |16.083     .77 | 22.08     .47
 4.167     .83 |10.167    2.80 |16.167     .77 | 22.17     .47
 4.250     .86 |10.250    2.59 |16.250     .76 | 22.25     .46
 4.333     .86 |10.333    2.59 |16.333     .76 | 22.33     .46
 4.417     .90 |10.417    2.42 |16.417     .75 | 22.42     .46
 4.500     .90 |10.500    2.42 |16.500     .75 | 22.50     .46
 4.583     .94 |10.583    2.27 |16.583     .73 | 22.58     .45
 4.667     .94 |10.667    2.26 |16.667     .73 | 22.67     .45
```

4.750	.99	10.750	2.13	16.750	.72	22.75	.45
4.833	.99	10.833	2.13	16.833	.72	22.83	.45
4.917	1.04	10.917	2.01	16.917	.71	22.92	.45
5.000	1.04	11.000	2.01	17.000	.71	23.00	.45
5.083	1.10	11.083	1.91	17.083	.70	23.08	.44
5.167	1.10	11.167	1.91	17.167	.70	23.17	.44
5.250	1.17	11.250	1.81	17.250	.68	23.25	.44
5.333	1.17	11.333	1.81	17.333	.68	23.33	.44
5.417	1.24	11.417	1.73	17.417	.67	23.42	.43
5.500	1.24	11.500	1.73	17.500	.67	23.50	.43
5.583	1.33	11.583	1.65	17.583	.66	23.58	.43
5.667	1.33	11.667	1.65	17.667	.66	23.67	.43
5.750	1.43	11.750	1.58	17.750	.65	23.75	.42
5.833	1.43	11.833	1.58	17.833	.65	23.83	.42
5.917	1.55	11.917	1.52	17.917	.64	23.92	.42
6.000	1.55	12.000	1.52	18.000	.64	24.00	.42

Max.Eff.Inten.(mm/hr)=	111.32	45.31	
over (min)	5.00	15.00	
Storage Coeff. (min)=	4.48 (ii)	14.17 (ii)	
Unit Hyd. Tpeak (min)=	5.00	15.00	
Unit Hyd. peak (cms)=	.23	.08	
			TOTALS
PEAK FLOW (cms)=	1.12	.39	1.329 (iii)
TIME TO PEAK (hrs)=	8.00	8.17	8.00
RUNOFF VOLUME (mm)=	67.67	24.71	39.75
TOTAL RAINFALL (mm)=	68.67	68.67	68.67
RUNOFF COEFFICIENT =	.99	.36	.58

***** WARNING: STORAGE COEFF. IS SMALLER THAN TIME STEP!

(i) CN PROCEDURE SELECTED FOR PERVIOUS LOSSES:
CN* = 65.0 Ia = Dep. Storage (Above)
(ii) TIME STEP (DT) SHOULD BE SMALLER OR EQUAL
THAN THE STORAGE COEFFICIENT.
(iii) PEAK FLOW DOES NOT INCLUDE BASEFLOW IF ANY.

ADD HYD (0103)		AREA	QPEAK	TPEAK	R.V.
1 + 2 = 3		(ha)	(cms)	(hrs)	(mm)
	ID1= 1 (0102):	85.58	1.511	9.00	22.58
	+ ID2= 2 (0999):	11.29	1.329	8.00	39.75
	ID = 3 (0103):	96.87	1.703	8.83	24.58

NOTE: PEAK FLOWS DO NOT INCLUDE BASEFLOWS IF ANY.

** SIMULATION NUMBER: 4 ** **25-year 24-hr Chicago Storm**

CHICAGO STORM	IDF curve parameters: A=1917.901
Ptotal= 79.92 mm	B= 11.842
	C= .873

used in: INTENSITY = A / (t + B)^C

Duration of storm = 24.00 hrs
Storm time step = 10.00 min
Time to peak ratio = .33

TIME hrs	RAIN mm/hr	TIME hrs	RAIN mm/hr	TIME hrs	RAIN mm/hr	TIME hrs	RAIN mm/hr
.17	.46	6.17	1.88	12.17	1.61	18.17	.68
.33	.47	6.33	2.08	12.33	1.55	18.33	.67
.50	.48	6.50	2.33	12.50	1.49	18.50	.66
.67	.49	6.67	2.64	12.67	1.44	18.67	.65
.83	.50	6.83	3.06	12.83	1.39	18.83	.64
1.00	.51	7.00	3.64	13.00	1.35	19.00	.63
1.17	.52	7.17	4.50	13.17	1.30	19.17	.62
1.33	.53	7.33	5.87	13.33	1.26	19.33	.61
1.50	.54	7.50	8.38	13.50	1.22	19.50	.61
1.67	.56	7.67	14.21	13.67	1.19	19.67	.60
1.83	.57	7.83	38.12	13.83	1.16	19.83	.59
2.00	.58	8.00	129.90	14.00	1.12	20.00	.58
2.17	.60	8.17	50.57	14.17	1.10	20.17	.57
2.33	.62	8.33	25.72	14.33	1.07	20.33	.57
2.50	.63	8.50	16.53	14.50	1.04	20.50	.56
2.67	.65	8.67	11.94	14.67	1.02	20.67	.55
2.83	.67	8.83	9.26	14.83	.99	20.83	.55
3.00	.69	9.00	7.52	15.00	.97	21.00	.54
3.17	.72	9.17	6.32	15.17	.95	21.17	.53
3.33	.74	9.33	5.44	15.33	.93	21.33	.53
3.50	.77	9.50	4.77	15.50	.91	21.50	.52
3.67	.80	9.67	4.24	15.67	.89	21.67	.52
3.83	.83	9.83	3.82	15.83	.87	21.83	.51
4.00	.86	10.00	3.48	16.00	.85	22.00	.50
4.17	.90	10.17	3.19	16.17	.84	22.17	.50
4.33	.94	10.33	2.95	16.33	.82	22.33	.49
4.50	.98	10.50	2.74	16.50	.80	22.50	.49
4.67	1.03	10.67	2.56	16.67	.79	22.67	.48
4.83	1.08	10.83	2.40	16.83	.78	22.83	.48
5.00	1.14	11.00	2.26	17.00	.76	23.00	.47
5.17	1.21	11.17	2.14	17.17	.75	23.17	.47
5.33	1.28	11.33	2.03	17.33	.74	23.33	.46
5.50	1.37	11.50	1.93	17.50	.72	23.50	.46
5.67	1.47	11.67	1.84	17.67	.71	23.67	.45
5.83	1.58	11.83	1.76	17.83	.70	23.83	.45
6.00	1.72	12.00	1.68	18.00	.69	24.00	.45

CALIB					
NASHYD (0026)	ID= 1 DT=10.0 min	Area (ha)= 21.85	Curve Number (CN)= 70.0		
		Ia (mm)= 8.00	# of Linear Res.(N)= 3.00		
		U.H. Tp(hrs)= .78			

Unit Hyd Qpeak (cms)= 1.070

PEAK FLOW (cms)= .623 (i)
TIME TO PEAK (hrs)= 8.833
RUNOFF VOLUME (mm)= 28.611
TOTAL RAINFALL (mm)= 79.924
RUNOFF COEFFICIENT = .358

(i) PEAK FLOW DOES NOT INCLUDE BASEFLOW IF ANY.

CALIB					
NASHYD (0099)	ID= 1 DT=10.0 min	Area (ha)= 47.39	Curve Number (CN)= 73.0		
		Ia (mm)= 8.00	# of Linear Res.(N)= 3.00		
		U.H. Tp(hrs)= 1.18			

Unit Hyd Qpeak (cms)= 1.534

PEAK FLOW (cms)= 1.097 (i)
TIME TO PEAK (hrs)= 9.333
RUNOFF VOLUME (mm)= 31.187
TOTAL RAINFALL (mm)= 79.924
RUNOFF COEFFICIENT = .390

(i) PEAK FLOW DOES NOT INCLUDE BASEFLOW IF ANY.

ADD HYD (0101)		AREA	QPEAK	TPEAK	R.V.
1 + 2 = 3		(ha)	(cms)	(hrs)	(mm)
	ID1= 1 (0026):	21.85	.623	8.83	28.61
	+ ID2= 2 (0099):	47.39	1.097	9.33	31.19
	ID = 3 (0101):	69.24	1.662	9.17	30.37

NOTE: PEAK FLOWS DO NOT INCLUDE BASEFLOWS IF ANY.

```
--------------------------------------------------------------------------------
--------------------
| CALIB            |
| NASHYD    (0018) |   Area    (ha)=  16.34   Curve Number   (CN)= 65.0
|ID= 1 DT=10.0 min |   Ia      (mm)=   5.00   # of Linear Res.(N)= 3.00
--------------------   U.H. Tp(hrs)=    .59

     Unit Hyd Qpeak  (cms)=   1.058

     PEAK FLOW       (cms)=    .529 (i)
     TIME TO PEAK    (hrs)=   8.667
     RUNOFF VOLUME    (mm)=  26.507
     TOTAL RAINFALL   (mm)=  79.924
     RUNOFF COEFFICIENT   =    .332

     (i) PEAK FLOW DOES NOT INCLUDE BASEFLOW IF ANY.

--------------------------------------------------------------------------------

--------------------
| ADD HYD   (0102) |
|   1 +  2 =  3    |         AREA    QPEAK    TPEAK     R.V.
--------------------         (ha)    (cms)    (hrs)     (mm)
         ID1= 1 (0101):    69.24   1.662     9.17    30.37
       + ID2= 2 (0018):    16.34    .529     8.67    26.51
         ================================================
         ID = 3 (0102):    85.58   2.088     9.00    29.64

     NOTE:  PEAK FLOWS DO NOT INCLUDE BASEFLOWS IF ANY.

--------------------------------------------------------------------------------
--------------------
| CALIB            |
| STANDHYD  (0999) |   Area    (ha)=  11.29
|ID= 1 DT= 5.0 min |   Total Imp(%)=  50.00   Dir. Conn.(%)=  35.00
--------------------

                          IMPERVIOUS    PERVIOUS (i)
     Surface Area     (ha)=      5.64         5.64
     Dep. Storage     (mm)=      1.00         5.00
     Average Slope     (%)=      1.00         2.00
     Length            (m)=    274.30        40.00
     Mannings n           =      .013         .250

         NOTE:  RAINFALL WAS TRANSFORMED TO   5.0 MIN. TIME STEP.

                     ---- TRANSFORMED HYETOGRAPH ----
   TIME    RAIN |  TIME    RAIN |  TIME    RAIN |  TIME    RAIN
    hrs   mm/hr |   hrs   mm/hr |   hrs   mm/hr |   hrs   mm/hr
   .083     .46 | 6.083    1.88 |12.083    1.61 | 18.08     .68
   .167     .46 | 6.167    1.88 |12.167    1.61 | 18.17     .68
   .250     .47 | 6.250    2.08 |12.250    1.55 | 18.25     .67
   .333     .47 | 6.333    2.08 |12.333    1.55 | 18.33     .67
   .417     .48 | 6.417    2.33 |12.417    1.49 | 18.42     .66
   .500     .48 | 6.500    2.33 |12.500    1.49 | 18.50     .66
   .583     .49 | 6.583    2.64 |12.583    1.44 | 18.58     .65
   .667     .49 | 6.667    2.64 |12.667    1.44 | 18.67     .65
   .750     .50 | 6.750    3.06 |12.750    1.39 | 18.75     .64
   .833     .50 | 6.833    3.06 |12.833    1.39 | 18.83     .64
   .917     .51 | 6.917    3.64 |12.917    1.35 | 18.92     .63
  1.000     .51 | 7.000    3.64 |13.000    1.35 | 19.00     .63
  1.083     .52 | 7.083    4.50 |13.083    1.30 | 19.08     .62
  1.167     .52 | 7.167    4.50 |13.167    1.30 | 19.17     .62
  1.250     .53 | 7.250    5.87 |13.250    1.26 | 19.25     .61
  1.333     .53 | 7.333    5.87 |13.333    1.26 | 19.33     .61
  1.417     .54 | 7.417    8.38 |13.417    1.22 | 19.42     .61
  1.500     .54 | 7.500    8.38 |13.500    1.22 | 19.50     .61
  1.583     .56 | 7.583   14.21 |13.583    1.19 | 19.58     .60
  1.667     .56 | 7.667   14.22 |13.667    1.19 | 19.67     .60
  1.750     .57 | 7.750   38.12 |13.750    1.16 | 19.75     .59
  1.833     .57 | 7.833   38.13 |13.833    1.16 | 19.83     .59
  1.917     .58 | 7.917  129.90 |13.917    1.12 | 19.92     .58
  2.000     .58 | 8.000  129.90 |14.000    1.12 | 20.00     .58
  2.083     .60 | 8.083   50.57 |14.083    1.10 | 20.08     .57
  2.167     .60 | 8.167   50.57 |14.167    1.10 | 20.17     .57
  2.250     .62 | 8.250   25.72 |14.250    1.07 | 20.25     .57
  2.333     .62 | 8.333   25.72 |14.333    1.07 | 20.33     .57
  2.417     .63 | 8.417   16.53 |14.417    1.04 | 20.42     .56
  2.500     .63 | 8.500   16.53 |14.500    1.04 | 20.50     .56
  2.583     .65 | 8.583   11.94 |14.583    1.02 | 20.58     .55
  2.667     .65 | 8.667   11.94 |14.667    1.02 | 20.67     .55
  2.750     .67 | 8.750    9.26 |14.750     .99 | 20.75     .55
  2.833     .67 | 8.833    9.26 |14.833     .99 | 20.83     .55
  2.917     .69 | 8.917    7.52 |14.917     .97 | 20.92     .54
  3.000     .69 | 9.000    7.52 |15.000     .97 | 21.00     .54
  3.083     .72 | 9.083    6.32 |15.083     .95 | 21.08     .53
  3.167     .72 | 9.167    6.32 |15.167     .95 | 21.17     .53
  3.250     .74 | 9.250    5.44 |15.250     .93 | 21.25     .53
  3.333     .74 | 9.333    5.44 |15.333     .93 | 21.33     .53
  3.417     .77 | 9.417    4.77 |15.417     .91 | 21.42     .52
  3.500     .77 | 9.500    4.77 |15.500     .91 | 21.50     .52
  3.583     .80 | 9.583    4.24 |15.583     .89 | 21.58     .52
  3.667     .80 | 9.667    4.24 |15.667     .89 | 21.67     .52
  3.750     .83 | 9.750    3.82 |15.750     .87 | 21.75     .51
  3.833     .83 | 9.833    3.82 |15.833     .87 | 21.83     .51
  3.917     .86 | 9.917    3.48 |15.917     .85 | 21.92     .50
  4.000     .86 |10.000    3.48 |16.000     .85 | 22.00     .50
  4.083     .90 |10.083    3.19 |16.083     .84 | 22.08     .50
  4.167     .90 |10.167    3.19 |16.167     .84 | 22.17     .50
  4.250     .94 |10.250    2.95 |16.250     .82 | 22.25     .49
  4.333     .94 |10.333    2.95 |16.333     .82 | 22.33     .49
  4.417     .98 |10.417    2.74 |16.417     .80 | 22.42     .49
  4.500     .98 |10.500    2.74 |16.500     .80 | 22.50     .49
  4.583    1.03 |10.583    2.56 |16.583     .79 | 22.58     .48
  4.667    1.03 |10.667    2.56 |16.667     .79 | 22.67     .48
  4.750    1.08 |10.750    2.40 |16.750     .78 | 22.75     .48
  4.833    1.08 |10.833    2.40 |16.833     .78 | 22.83     .48
  4.917    1.14 |10.917    2.26 |16.917     .76 | 22.92     .47
  5.000    1.14 |11.000    2.26 |17.000     .76 | 23.00     .47
  5.083    1.21 |11.083    2.14 |17.083     .75 | 23.08     .47
  5.167    1.21 |11.167    2.14 |17.167     .75 | 23.17     .47
  5.250    1.28 |11.250    2.03 |17.250     .74 | 23.25     .46
  5.333    1.28 |11.333    2.03 |17.333     .74 | 23.33     .46
  5.417    1.37 |11.417    1.93 |17.417     .72 | 23.42     .46
  5.500    1.37 |11.500    1.93 |17.500     .72 | 23.50     .46
  5.583    1.47 |11.583    1.84 |17.583     .71 | 23.58     .45
  5.667    1.47 |11.667    1.84 |17.667     .71 | 23.67     .45
  5.750    1.58 |11.750    1.76 |17.750     .70 | 23.75     .45
  5.833    1.58 |11.833    1.76 |17.833     .70 | 23.83     .45
  5.917    1.72 |11.917    1.68 |17.917     .69 | 23.92     .45
  6.000    1.72 |12.000    1.68 |18.000     .69 | 24.00     .45

     Max.Eff.Inten.(mm/hr)=     129.90        60.12
               over (min)        5.00        15.00
     Storage Coeff.  (min)=      4.22 (ii)   12.87 (ii)
     Unit Hyd. Tpeak (min)=      5.00        15.00
     Unit Hyd. peak  (cms)=       .24          .08
                                                        *TOTALS*
     PEAK FLOW       (cms)=      1.33          .55         1.622 (iii)
     TIME TO PEAK    (hrs)=      8.00         8.17          8.00
     RUNOFF VOLUME    (mm)=     78.92        31.93         48.38
     TOTAL RAINFALL   (mm)=     79.92        79.92         79.92
     RUNOFF COEFFICIENT   =       .99          .40           .61

***** WARNING: STORAGE COEFF. IS SMALLER THAN TIME STEP!

       (i) CN PROCEDURE SELECTED FOR PERVIOUS LOSSES:
           CN*  =  65.0    Ia = Dep. Storage  (Above)
      (ii) TIME STEP (DT) SHOULD BE SMALLER OR EQUAL
           THAN THE STORAGE COEFFICIENT.
     (iii) PEAK FLOW DOES NOT INCLUDE BASEFLOW IF ANY.

--------------------------------------------------------------------------------

--------------------
| ADD HYD   (0103) |
|   1 +  2 =  3    |         AREA    QPEAK    TPEAK     R.V.
--------------------         (ha)    (cms)    (hrs)     (mm)
         ID1= 1 (0102):    85.58   2.088     9.00    29.64
       + ID2= 2 (0999):    11.29   1.622     8.00    48.38
         ================================================
```

```
         ID = 3 (0103):    96.87   2.327     8.83    31.82

    NOTE:  PEAK FLOWS DO NOT INCLUDE BASEFLOWS IF ANY.

--------------------------------------------------------------------------------
  ****************************
  ** SIMULATION NUMBER:   5 ** 50-year 24-hr Chicago Storm
  ****************************

--------------------
| CHICAGO STORM    |    IDF curve parameters: A=2141.858
| Ptotal= 89.89 mm |                          B=  12.181
--------------------                          C=    .872
                       used in:   INTENSITY =  A / (t + B)^C

                       Duration of storm  = 24.00 hrs
                       Storm time step    = 10.00 min
                       Time to peak ratio =   .33

                TIME    RAIN |  TIME    RAIN |  TIME    RAIN |  TIME    RAIN
                 hrs   mm/hr |   hrs   mm/hr |   hrs   mm/hr |   hrs   mm/hr
                 .17     .52 |  6.17    2.13 | 12.17    1.83 | 18.17     .77
                 .33     .53 |  6.33    2.36 | 12.33    1.76 | 18.33     .76
                 .50     .54 |  6.50    2.64 | 12.50    1.70 | 18.50     .75
                 .67     .55 |  6.67    3.00 | 12.67    1.64 | 18.67     .74
                 .83     .56 |  6.83    3.48 | 12.83    1.58 | 18.83     .73
                1.00     .57 |  7.00    4.14 | 13.00    1.53 | 19.00     .72
                1.17     .59 |  7.17    5.11 | 13.17    1.48 | 19.17     .71
                1.33     .60 |  7.33    6.66 | 13.33    1.43 | 19.33     .70
                1.50     .62 |  7.50    9.51 | 13.50    1.39 | 19.50     .69
                1.67     .63 |  7.67   16.12 | 13.67    1.35 | 19.67     .68
                1.83     .65 |  7.83   42.91 | 13.83    1.31 | 19.83     .67
                2.00     .66 |  8.00  143.58 | 14.00    1.28 | 20.00     .66
                2.17     .68 |  8.17   56.81 | 14.17    1.24 | 20.17     .65
                2.33     .70 |  8.33   29.08 | 14.33    1.21 | 20.33     .64
                2.50     .72 |  8.50   18.73 | 14.50    1.18 | 20.50     .64
                2.67     .74 |  8.67   13.55 | 14.67    1.15 | 20.67     .63
                2.83     .76 |  8.83   10.51 | 14.83    1.13 | 20.83     .62
                3.00     .79 |  9.00    8.54 | 15.00    1.10 | 21.00     .61
                3.17     .81 |  9.17    7.18 | 15.17    1.07 | 21.17     .61
                3.33     .84 |  9.33    6.18 | 15.33    1.05 | 21.33     .60
                3.50     .87 |  9.50    5.41 | 15.50    1.03 | 21.50     .59
                3.67     .90 |  9.67    4.82 | 15.67    1.01 | 21.67     .59
                3.83     .94 |  9.83    4.34 | 15.83     .99 | 21.83     .58
                4.00     .98 | 10.00    3.95 | 16.00     .97 | 22.00     .57
                4.17    1.02 | 10.17    3.62 | 16.17     .95 | 22.17     .57
                4.33    1.06 | 10.33    3.34 | 16.33     .93 | 22.33     .56
                4.50    1.11 | 10.50    3.11 | 16.50     .91 | 22.50     .55
                4.67    1.16 | 10.67    2.90 | 16.67     .90 | 22.67     .55
                4.83    1.23 | 10.83    2.72 | 16.83     .88 | 22.83     .54
                5.00    1.29 | 11.00    2.57 | 17.00     .86 | 23.00     .54
                5.17    1.37 | 11.17    2.43 | 17.17     .85 | 23.17     .53
                5.33    1.45 | 11.33    2.30 | 17.33     .84 | 23.33     .53
                5.50    1.55 | 11.50    2.19 | 17.50     .82 | 23.50     .52
                5.67    1.66 | 11.67    2.09 | 17.67     .81 | 23.67     .52
                5.83    1.79 | 11.83    1.99 | 17.83     .80 | 23.83     .51
                6.00    1.95 | 12.00    1.91 | 18.00     .78 | 24.00     .51


--------------------------------------------------------------------------------
--------------------
| CALIB            |
| NASHYD    (0026) |   Area    (ha)=  21.85   Curve Number   (CN)= 70.0
|ID= 1 DT=10.0 min |   Ia      (mm)=   8.00   # of Linear Res.(N)= 3.00
--------------------   U.H. Tp(hrs)=    .78

     Unit Hyd Qpeak  (cms)=   1.070

     PEAK FLOW       (cms)=    .773 (i)
     TIME TO PEAK    (hrs)=   8.833
     RUNOFF VOLUME    (mm)=  35.152
     TOTAL RAINFALL   (mm)=  89.891
     RUNOFF COEFFICIENT   =    .391

     (i) PEAK FLOW DOES NOT INCLUDE BASEFLOW IF ANY.

--------------------------------------------------------------------------------
--------------------
| CALIB            |
| NASHYD    (0099) |   Area    (ha)=  47.39   Curve Number   (CN)= 73.0
|ID= 1 DT=10.0 min |   Ia      (mm)=   8.00   # of Linear Res.(N)= 3.00
--------------------   U.H. Tp(hrs)=   1.18

     Unit Hyd Qpeak  (cms)=   1.534

     PEAK FLOW       (cms)=   1.354 (i)
     TIME TO PEAK    (hrs)=   9.333
     RUNOFF VOLUME    (mm)=  38.138
     TOTAL RAINFALL   (mm)=  89.891
     RUNOFF COEFFICIENT   =    .424

     (i) PEAK FLOW DOES NOT INCLUDE BASEFLOW IF ANY.

--------------------------------------------------------------------------------
--------------------
| ADD HYD   (0101) |
|   1 +  2 =  3    |         AREA    QPEAK    TPEAK     R.V.
--------------------         (ha)    (cms)    (hrs)     (mm)
          ID1= 1 (0026):    21.85    .773     8.83    35.15
        + ID2= 2 (0099):    47.39   1.354     9.33    38.14
          ================================================
          ID = 3 (0101):    69.24   2.055     9.17    37.20

     NOTE:  PEAK FLOWS DO NOT INCLUDE BASEFLOWS IF ANY.

--------------------------------------------------------------------------------
--------------------
| CALIB            |
| NASHYD    (0018) |   Area    (ha)=  16.34   Curve Number   (CN)= 65.0
|ID= 1 DT=10.0 min |   Ia      (mm)=   5.00   # of Linear Res.(N)= 3.00
--------------------   U.H. Tp(hrs)=    .59

     Unit Hyd Qpeak  (cms)=   1.058

     PEAK FLOW       (cms)=    .651 (i)
     TIME TO PEAK    (hrs)=   8.667
     RUNOFF VOLUME    (mm)=  32.498
     TOTAL RAINFALL   (mm)=  89.891
     RUNOFF COEFFICIENT   =    .362

     (i) PEAK FLOW DOES NOT INCLUDE BASEFLOW IF ANY.

--------------------------------------------------------------------------------
--------------------
| ADD HYD   (0102) |
|   1 +  2 =  3    |         AREA    QPEAK    TPEAK     R.V.
--------------------         (ha)    (cms)    (hrs)     (mm)
          ID1= 1 (0101):    69.24   2.055     9.17    37.20
        + ID2= 2 (0018):    16.34    .651     8.67    32.50
          ================================================
          ID = 3 (0102):    85.58   2.581     9.00    36.30

     NOTE:  PEAK FLOWS DO NOT INCLUDE BASEFLOWS IF ANY.

--------------------------------------------------------------------------------
--------------------
| CALIB            |
| STANDHYD  (0999) |   Area    (ha)=  11.29
|ID= 1 DT= 5.0 min |   Total Imp(%)=  50.00   Dir. Conn.(%)=  35.00
--------------------

                              IMPERVIOUS    PERVIOUS (i)
     Surface Area     (ha)=       5.64         5.64
     Dep. Storage     (mm)=       1.00         5.00
     Average Slope     (%)=       1.00         2.00
     Length            (m)=     274.30        40.00
     Mannings n           =       .013         .250

         NOTE:  RAINFALL WAS TRANSFORMED TO   5.0 MIN. TIME STEP.
```

---- TRANSFORMED HYETOGRAPH ----

TIME hrs	RAIN mm/hr	TIME hrs	RAIN mm/hr	TIME hrs	RAIN mm/hr	TIME hrs	RAIN mm/hr
.083	.52	6.083	2.13	12.083	1.83	18.08	.77
.167	.52	6.167	2.13	12.167	1.83	18.17	.77
.250	.53	6.250	2.36	12.250	1.76	18.25	.76
.333	.53	6.333	2.36	12.333	1.76	18.33	.76
.417	.54	6.417	2.64	12.417	1.70	18.42	.75
.500	.54	6.500	2.64	12.500	1.70	18.50	.75
.583	.55	6.583	3.00	12.583	1.64	18.58	.74
.667	.55	6.667	3.00	12.667	1.64	18.67	.74
.750	.56	6.750	3.48	12.750	1.58	18.75	.73
.833	.56	6.833	3.48	12.833	1.58	18.83	.73
.917	.57	6.917	4.14	12.917	1.53	18.92	.72
1.000	.57	7.000	4.14	13.000	1.53	19.00	.72
1.083	.59	7.083	5.11	13.083	1.48	19.08	.71
1.167	.59	7.167	5.11	13.167	1.48	19.17	.71
1.250	.60	7.250	6.66	13.250	1.43	19.25	.70
1.333	.60	7.333	6.66	13.333	1.43	19.33	.70
1.417	.62	7.417	9.51	13.417	1.39	19.42	.69
1.500	.62	7.500	9.51	13.500	1.39	19.50	.69
1.583	.63	7.583	16.12	13.583	1.35	19.58	.68
1.667	.63	7.667	16.12	13.667	1.35	19.67	.68
1.750	.65	7.750	42.91	13.750	1.31	19.75	.67
1.833	.65	7.833	42.92	13.833	1.31	19.83	.67
1.917	.66	7.917	143.58	13.917	1.28	19.92	.66
2.000	.66	8.000	143.57	14.000	1.28	20.00	.66
2.083	.68	8.083	56.81	14.083	1.24	20.08	.65
2.167	.68	8.167	56.81	14.167	1.24	20.17	.65
2.250	.70	8.250	29.08	14.250	1.21	20.25	.64
2.333	.70	8.333	29.08	14.333	1.21	20.33	.64
2.417	.72	8.417	18.73	14.417	1.18	20.42	.64
2.500	.72	8.500	18.73	14.500	1.18	20.50	.64
2.583	.74	8.583	13.55	14.583	1.15	20.58	.63
2.667	.74	8.667	13.55	14.667	1.15	20.67	.63
2.750	.76	8.750	10.51	14.750	1.13	20.75	.62
2.833	.76	8.833	10.51	14.833	1.13	20.83	.62
2.917	.79	8.917	8.54	14.917	1.10	20.92	.61
3.000	.79	9.000	8.54	15.000	1.10	21.00	.61
3.083	.81	9.083	7.18	15.083	1.07	21.08	.61
3.167	.81	9.167	7.18	15.167	1.07	21.17	.61
3.250	.84	9.250	6.18	15.250	1.05	21.25	.60
3.333	.84	9.333	6.18	15.333	1.05	21.33	.60
3.417	.87	9.417	5.41	15.417	1.03	21.42	.59
3.500	.87	9.500	5.41	15.500	1.03	21.50	.59
3.583	.90	9.583	4.82	15.583	1.01	21.58	.59
3.667	.90	9.667	4.82	15.667	1.01	21.67	.59
3.750	.94	9.750	4.34	15.750	.99	21.75	.58
3.833	.94	9.833	4.34	15.833	.99	21.83	.58
3.917	.98	9.917	3.95	15.917	.97	21.92	.57
4.000	.98	10.000	3.95	16.000	.97	22.00	.57
4.083	1.02	10.083	3.62	16.083	.95	22.08	.57
4.167	1.02	10.167	3.62	16.167	.95	22.17	.57
4.250	1.06	10.250	3.34	16.250	.93	22.25	.56
4.333	1.06	10.333	3.34	16.333	.93	22.33	.56
4.417	1.11	10.417	3.11	16.417	.91	22.42	.55
4.500	1.11	10.500	3.11	16.500	.91	22.50	.55
4.583	1.16	10.583	2.90	16.583	.90	22.58	.55
4.667	1.16	10.667	2.90	16.667	.90	22.67	.55
4.750	1.23	10.750	2.72	16.750	.88	22.75	.54
4.833	1.23	10.833	2.72	16.833	.88	22.83	.54
4.917	1.29	10.917	2.57	16.917	.86	22.92	.54
5.000	1.29	11.000	2.57	17.000	.86	23.00	.54
5.083	1.37	11.083	2.43	17.083	.85	23.08	.53
5.167	1.37	11.167	2.43	17.167	.85	23.17	.53
5.250	1.45	11.250	2.30	17.250	.84	23.25	.53
5.333	1.45	11.333	2.30	17.333	.84	23.33	.53
5.417	1.55	11.417	2.19	17.417	.82	23.42	.52
5.500	1.55	11.500	2.19	17.500	.82	23.50	.52
5.583	1.66	11.583	2.09	17.583	.81	23.58	.52
5.667	1.66	11.667	2.09	17.667	.81	23.67	.52
5.750	1.79	11.750	1.99	17.750	.80	23.75	.51
5.833	1.79	11.833	1.99	17.833	.80	23.83	.51
5.917	1.95	11.917	1.91	17.917	.78	23.92	.51
6.000	1.95	12.000	1.91	18.000	.78	24.00	.51

Max.Eff.Inten.(mm/hr)=	143.58	72.80	
over (min)	5.00	15.00	
Storage Coeff. (min)=	4.05 (ii)	12.06 (ii)	
Unit Hyd. Tpeak (min)=	5.00	15.00	
Unit Hyd. peak (cms)=	.24	.09	
			TOTALS
PEAK FLOW (cms)=	1.48	.69	1.854 (iii)
TIME TO PEAK (hrs)=	8.00	8.17	8.00
RUNOFF VOLUME (mm)=	88.89	38.71	56.27
TOTAL RAINFALL (mm)=	89.89	89.89	89.89
RUNOFF COEFFICIENT =	.99	.43	.63

***** WARNING: STORAGE COEFF. IS SMALLER THAN TIME STEP!

(i) CN PROCEDURE SELECTED FOR PERVIOUS LOSSES:
CN* = 65.0 Ia = Dep. Storage (Above)
(ii) TIME STEP (DT) SHOULD BE SMALLER OR EQUAL
THAN THE STORAGE COEFFICIENT.
(iii) PEAK FLOW DOES NOT INCLUDE BASEFLOW IF ANY.

ADD HYD (0103)		AREA (ha)	QPEAK (cms)	TPEAK (hrs)	R.V. (mm)
1 + 2 = 3	ID1= 1 (0102):	85.58	2.581	9.00	36.30
	+ ID2= 2 (0099):	11.29	1.854	8.00	56.27
	ID = 3 (0103):	96.87	2.859	8.83	38.63

NOTE: PEAK FLOWS DO NOT INCLUDE BASEFLOWS IF ANY.

** SIMULATION NUMBER: 6 ** **100-year 24-hr Chicago Storm**

CHICAGO STORM	Ptotal= 98.30 mm

IDF curve parameters: A=2465.877
B= 12.899
C= .879
used in: INTENSITY = A / (t + B)^C

Duration of storm = 24.00 hrs
Storm time step = 10.00 min
Time to peak ratio = .33

TIME hrs	RAIN mm/hr	TIME hrs	RAIN mm/hr	TIME hrs	RAIN mm/hr	TIME hrs	RAIN mm/hr
.17	.54	6.17	2.28	12.17	1.95	18.17	.81
.33	.55	6.33	2.53	12.33	1.88	18.33	.80
.50	.56	6.50	2.84	12.50	1.80	18.50	.78
.67	.57	6.67	3.23	12.67	1.74	18.67	.77
.83	.59	6.83	3.76	12.83	1.68	18.83	.76
1.00	.60	7.00	4.49	13.00	1.62	19.00	.75
1.17	.61	7.17	5.58	13.17	1.57	19.17	.74
1.33	.63	7.33	7.32	13.33	1.52	19.33	.73
1.50	.64	7.50	10.52	13.50	1.47	19.50	.72
1.67	.66	7.67	17.97	13.67	1.43	19.67	.71
1.83	.68	7.83	48.01	13.83	1.39	19.83	.70
2.00	.69	8.00	157.29	14.00	1.35	20.00	.69
2.17	.71	8.17	63.50	14.17	1.31	20.17	.68
2.33	.73	8.33	32.59	14.33	1.28	20.33	.67
2.50	.75	8.50	20.92	14.50	1.25	20.50	.66
2.67	.78	8.67	15.07	14.67	1.22	20.67	.66
2.83	.80	8.83	11.65	14.83	1.19	20.83	.65
3.00	.83	9.00	9.43	15.00	1.16	21.00	.64
3.17	.85	9.17	7.89	15.17	1.13	21.17	.63
3.33	.88	9.33	6.77	15.33	1.11	21.33	.62
3.50	.91	9.50	5.92	15.50	1.08	21.50	.62
3.67	.95	9.67	5.25	15.67	1.06	21.67	.61
3.83	.99	9.83	4.72	15.83	1.04	21.83	.60
4.00	1.03	10.00	4.28	16.00	1.02	22.00	.60

4.17	1.07	10.17	3.92	16.17	1.00	22.17	.59
4.33	1.12	10.33	3.61	16.33	.98	22.33	.58
4.50	1.17	10.50	3.35	16.50	.96	22.50	.58
4.67	1.23	10.67	3.13	16.67	.94	22.67	.57
4.83	1.29	10.83	2.93	16.83	.92	22.83	.57
5.00	1.37	11.00	2.75	17.00	.91	23.00	.56
5.17	1.45	11.17	2.60	17.17	.89	23.17	.55
5.33	1.54	11.33	2.46	17.33	.88	23.33	.55
5.50	1.65	11.50	2.34	17.50	.86	23.50	.54
5.67	1.77	11.67	2.23	17.67	.85	23.67	.54
5.83	1.91	11.83	2.13	17.83	.83	23.83	.53
6.00	2.08	12.00	2.04	18.00	.82	24.00	.53

CALIB			
NASHYD (0026)	Area (ha)= 21.85	Curve Number (CN)= 70.0	
ID= 1 DT=10.0 min	Ia (mm)= 8.00	# of Linear Res.(N)= 3.00	
	U.H. Tp(hrs)= .78		

Unit Hyd Qpeak (cms)= 1.070

PEAK FLOW (cms)= .923 (i)
TIME TO PEAK (hrs)= 8.833
RUNOFF VOLUME (mm)= 40.941
TOTAL RAINFALL (mm)= 98.305
RUNOFF COEFFICIENT = .416

(i) PEAK FLOW DOES NOT INCLUDE BASEFLOW IF ANY.

CALIB			
NASHYD (0099)	Area (ha)= 47.39	Curve Number (CN)= 73.0	
ID= 1 DT=10.0 min	Ia (mm)= 8.00	# of Linear Res.(N)= 3.00	
	U.H. Tp(hrs)= 1.18		

Unit Hyd Qpeak (cms)= 1.534

PEAK FLOW (cms)= 1.609 (i)
TIME TO PEAK (hrs)= 9.333
RUNOFF VOLUME (mm)= 44.259
TOTAL RAINFALL (mm)= 98.305
RUNOFF COEFFICIENT = .450

(i) PEAK FLOW DOES NOT INCLUDE BASEFLOW IF ANY.

ADD HYD (0101)				
1 + 2 = 3	AREA (ha)	QPEAK (cms)	TPEAK (hrs)	R.V. (mm)
ID1= 1 (0026):	21.85	.923	8.83	40.94
+ ID2= 2 (0099):	47.39	1.609	9.33	44.26
ID = 3 (0101):	69.24	2.445	9.17	43.21

NOTE: PEAK FLOWS DO NOT INCLUDE BASEFLOWS IF ANY.

CALIB			
NASHYD (0018)	Area (ha)= 16.34	Curve Number (CN)= 65.0	
ID= 1 DT=10.0 min	Ia (mm)= 5.00	# of Linear Res.(N)= 3.00	
	U.H. Tp(hrs)= .59		

Unit Hyd Qpeak (cms)= 1.058

PEAK FLOW (cms)= .775 (i)
TIME TO PEAK (hrs)= 8.667
RUNOFF VOLUME (mm)= 37.823
TOTAL RAINFALL (mm)= 98.305
RUNOFF COEFFICIENT = .385

(i) PEAK FLOW DOES NOT INCLUDE BASEFLOW IF ANY.

ADD HYD (0102)				
1 + 2 = 3	AREA (ha)	QPEAK (cms)	TPEAK (hrs)	R.V. (mm)
ID1= 1 (0101):	69.24	2.445	9.17	43.21
+ ID2= 2 (0018):	16.34	.775	8.67	37.82
ID = 3 (0102):	85.58	3.074	9.00	42.18

NOTE: PEAK FLOWS DO NOT INCLUDE BASEFLOWS IF ANY.

CALIB			
STANDHYD (0999)	Area (ha)= 11.29		
ID= 1 DT= 5.0 min	Total Imp(%)= 50.00	Dir. Conn.(%)= 35.00	

		IMPERVIOUS	PERVIOUS (i)
Surface Area	(ha)=	5.64	5.64
Dep. Storage	(mm)=	1.00	5.00
Average Slope	(%)=	1.00	2.00
Length	(m)=	274.30	40.00
Mannings n	=	.013	.250

NOTE: RAINFALL WAS TRANSFORMED TO 5.0 MIN. TIME STEP.

---- TRANSFORMED HYETOGRAPH ----

TIME hrs	RAIN mm/hr	TIME hrs	RAIN mm/hr	TIME hrs	RAIN mm/hr	TIME hrs	RAIN mm/hr
.083	.54	6.083	2.28	12.083	1.95	18.08	.81
.167	.54	6.167	2.28	12.167	1.95	18.17	.81
.250	.55	6.250	2.53	12.250	1.88	18.25	.80
.333	.55	6.333	2.53	12.333	1.88	18.33	.80
.417	.56	6.417	2.84	12.417	1.80	18.42	.78
.500	.56	6.500	2.84	12.500	1.80	18.50	.78
.583	.57	6.583	3.23	12.583	1.74	18.58	.77
.667	.57	6.667	3.23	12.667	1.74	18.67	.77
.750	.59	6.750	3.76	12.750	1.68	18.75	.76
.833	.59	6.833	3.76	12.833	1.68	18.83	.76
.917	.60	6.917	4.49	12.917	1.62	18.92	.75
1.000	.60	7.000	4.49	13.000	1.62	19.00	.75
1.083	.61	7.083	5.58	13.083	1.57	19.08	.74
1.167	.61	7.167	5.58	13.167	1.57	19.17	.74
1.250	.63	7.250	7.32	13.250	1.52	19.25	.73
1.333	.63	7.333	7.32	13.333	1.52	19.33	.73
1.417	.64	7.417	10.52	13.417	1.47	19.42	.72
1.500	.64	7.500	10.52	13.500	1.47	19.50	.72
1.583	.66	7.583	17.97	13.583	1.43	19.58	.71
1.667	.66	7.667	17.98	13.667	1.43	19.67	.71
1.750	.68	7.750	48.01	13.750	1.39	19.75	.70
1.833	.68	7.833	48.02	13.833	1.39	19.83	.70
1.917	.69	7.917	157.29	13.917	1.35	19.92	.69
2.000	.69	8.000	157.28	14.000	1.35	20.00	.69
2.083	.71	8.083	63.50	14.083	1.31	20.08	.68
2.167	.71	8.167	63.50	14.167	1.31	20.17	.68
2.250	.73	8.250	32.59	14.250	1.28	20.25	.67
2.333	.73	8.333	32.59	14.333	1.28	20.33	.67
2.417	.75	8.417	20.92	14.417	1.25	20.42	.66
2.500	.75	8.500	20.92	14.500	1.25	20.50	.66
2.583	.78	8.583	15.07	14.583	1.22	20.58	.66
2.667	.78	8.667	15.07	14.667	1.22	20.67	.66
2.750	.80	8.750	11.65	14.750	1.19	20.75	.65
2.833	.80	8.833	11.65	14.833	1.19	20.83	.65
2.917	.83	8.917	9.43	14.917	1.16	20.92	.64
3.000	.83	9.000	9.43	15.000	1.16	21.00	.64
3.083	.85	9.083	7.89	15.083	1.13	21.08	.63
3.167	.85	9.167	7.89	15.167	1.13	21.17	.63
3.250	.88	9.250	6.77	15.250	1.11	21.25	.62
3.333	.88	9.333	6.77	15.333	1.11	21.33	.62
3.417	.91	9.417	5.92	15.417	1.08	21.42	.62
3.500	.91	9.500	5.92	15.500	1.08	21.50	.62

3.583	.95	9.583	5.25	15.583	1.06	21.58	.61
3.667	.95	9.667	5.25	15.667	1.06	21.67	.61
3.750	.99	9.750	4.72	15.750	1.04	21.75	.60
3.833	.99	9.833	4.72	15.833	1.04	21.83	.60
3.917	1.03	9.917	4.28	15.917	1.02	21.92	.60
4.000	1.03	10.000	4.28	16.000	1.02	22.00	.60
4.083	1.07	10.083	3.92	16.083	1.00	22.08	.59
4.167	1.07	10.167	3.92	16.167	1.00	22.17	.59
4.250	1.12	10.250	3.61	16.250	.98	22.25	.58
4.333	1.12	10.333	3.61	16.333	.98	22.33	.58
4.417	1.17	10.417	3.35	16.417	.96	22.42	.58
4.500	1.17	10.500	3.35	16.500	.96	22.50	.58
4.583	1.23	10.583	3.13	16.583	.94	22.58	.57
4.667	1.23	10.667	3.13	16.667	.94	22.67	.57
4.750	1.29	10.750	2.93	16.750	.92	22.75	.57
4.833	1.29	10.833	2.93	16.833	.92	22.83	.57
4.917	1.37	10.917	2.75	16.917	.91	22.92	.56
5.000	1.37	11.000	2.75	17.000	.91	23.00	.56
5.083	1.45	11.083	2.60	17.083	.89	23.08	.55
5.167	1.45	11.167	2.60	17.167	.89	23.17	.55
5.250	1.54	11.250	2.46	17.250	.88	23.25	.55
5.333	1.54	11.333	2.46	17.333	.88	23.33	.55
5.417	1.65	11.417	2.34	17.417	.86	23.42	.54
5.500	1.65	11.500	2.34	17.500	.86	23.50	.54
5.583	1.77	11.583	2.23	17.583	.85	23.58	.54
5.667	1.77	11.667	2.23	17.667	.85	23.67	.54
5.750	1.91	11.750	2.13	17.750	.83	23.75	.53
5.833	1.91	11.833	2.13	17.833	.83	23.83	.53
5.917	2.08	11.917	2.04	17.917	.82	23.92	.53
6.000	2.08	12.000	2.04	18.000	.82	24.00	.53

Max.Eff.Inten.(mm/hr)=	157.29	85.28	
over (min)	5.00	15.00	
Storage Coeff. (min)=	3.90 (ii)	11.43 (ii)	
Unit Hyd. Tpeak (min)=	5.00	15.00	
Unit Hyd. peak (cms)=	.25	.09	
			TOTALS
PEAK FLOW (cms)=	1.63	.83	2.087 (iii)
TIME TO PEAK (hrs)=	8.00	8.17	8.00
RUNOFF VOLUME (mm)=	97.30	44.69	63.10
TOTAL RAINFALL (mm)=	98.30	98.30	98.30
RUNOFF COEFFICIENT =	.99	.45	.64

***** WARNING: STORAGE COEFF. IS SMALLER THAN TIME STEP!

(i) CN PROCEDURE SELECTED FOR PERVIOUS LOSSES:
CN* = 65.0 Ia = Dep. Storage (Above)
(ii) TIME STEP (DT) SHOULD BE SMALLER OR EQUAL
THAN THE STORAGE COEFFICIENT.
(iii) PEAK FLOW DOES NOT INCLUDE BASEFLOW IF ANY.

ADD HYD (0103)		AREA (ha)	QPEAK (cms)	TPEAK (hrs)	R.V. (mm)
1 + 2 = 3	ID1= 1 (0102):	85.58	3.074	9.00	42.18
	+ ID2= 2 (0999):	11.29	2.087	8.00	63.10
	ID = 3 (0103):	96.87	3.389	8.83	44.62

NOTE: PEAK FLOWS DO NOT INCLUDE BASEFLOWS IF ANY.

** SIMULATION NUMBER: 7 ** **Timmins**

READ STORM	Filename: S:\SWM Library\Storms\Timmins\TIMMINS.STM
Ptotal=193.00 mm	Comments: * Timmins Storm

TIME	RAIN	TIME	RAIN	TIME	RAIN	TIME	RAIN
hrs	mm/hr	hrs	mm/hr	hrs	mm/hr	hrs	mm/hr
.25	15.00	3.25	3.00	6.25	43.00	9.25	13.00
.50	15.00	3.50	3.00	6.50	43.00	9.50	13.00
.75	15.00	3.75	3.00	6.75	43.00	9.75	13.00
1.00	15.00	4.00	3.00	7.00	43.00	10.00	13.00
1.25	20.00	4.25	5.00	7.25	20.00	10.25	13.00
1.50	20.00	4.50	5.00	7.50	20.00	10.50	13.00
1.75	20.00	4.75	5.00	7.75	20.00	10.75	13.00
2.00	20.00	5.00	5.00	8.00	20.00	11.00	13.00
2.25	10.00	5.25	20.00	8.25	23.00	11.25	8.00
2.50	10.00	5.50	20.00	8.50	23.00	11.50	8.00
2.75	10.00	5.75	20.00	8.75	23.00	11.75	8.00
3.00	10.00	6.00	20.00	9.00	23.00	12.00	8.00

CALIB					
NASHYD (0026)	Area	(ha)= 21.85	Curve Number	(CN)= 70.0	
ID= 1 DT=10.0 min	Ia	(mm)= 8.00	# of Linear Res.(N)= 3.00		
	U.H. Tp(hrs)= .78				

NOTE: RAINFALL WAS TRANSFORMED TO 10.0 MIN. TIME STEP.

---- TRANSFORMED HYETOGRAPH ----

TIME	RAIN	TIME	RAIN	TIME	RAIN	TIME	RAIN
hrs	mm/hr	hrs	mm/hr	hrs	mm/hr	hrs	mm/hr
.167	15.00	3.167	3.00	6.167	43.00	9.17	13.00
.333	15.00	3.333	3.00	6.333	43.00	9.33	13.00
.500	15.00	3.500	3.00	6.500	43.00	9.50	13.00
.667	15.00	3.667	3.00	6.667	43.00	9.67	13.00
.833	15.00	3.833	3.00	6.833	43.00	9.83	13.00
1.000	15.00	4.000	3.00	7.000	43.00	10.00	13.00
1.167	20.00	4.167	5.00	7.167	20.00	10.17	13.00
1.333	20.00	4.333	5.00	7.333	20.00	10.33	13.00
1.500	20.00	4.500	5.00	7.500	20.00	10.50	13.00
1.667	20.00	4.667	5.00	7.667	20.00	10.67	13.00
1.833	20.00	4.833	5.00	7.833	20.00	10.83	13.00
2.000	20.00	5.000	5.00	8.000	20.00	11.00	13.00
2.167	10.00	5.167	20.00	8.167	23.00	11.17	8.00
2.333	10.00	5.333	20.00	8.333	23.00	11.33	8.00
2.500	10.00	5.500	20.00	8.500	23.00	11.50	8.00
2.667	10.00	5.667	20.00	8.667	23.00	11.67	8.00
2.833	10.00	5.833	20.00	8.833	23.00	11.83	8.00
3.000	10.00	6.000	20.00	9.000	23.00	12.00	8.00

Unit Hyd Qpeak (cms)= 1.070

PEAK FLOW (cms)= 1.362 (i)
TIME TO PEAK (hrs)= 7.500
RUNOFF VOLUME (mm)= 116.452
TOTAL RAINFALL (mm)= 193.000
RUNOFF COEFFICIENT = .603

(i) PEAK FLOW DOES NOT INCLUDE BASEFLOW IF ANY.

CALIB					
NASHYD (0099)	Area	(ha)= 47.39	Curve Number	(CN)= 73.0	
ID= 1 DT=10.0 min	Ia	(mm)= 8.00	# of Linear Res.(N)= 3.00		
	U.H. Tp(hrs)= 1.18				

Unit Hyd Qpeak (cms)= 1.534

PEAK FLOW (cms)= 2.632 (i)
TIME TO PEAK (hrs)= 8.000
RUNOFF VOLUME (mm)= 122.691
TOTAL RAINFALL (mm)= 193.000
RUNOFF COEFFICIENT = .636

(i) PEAK FLOW DOES NOT INCLUDE BASEFLOW IF ANY.

```
--------------------
| ADD HYD   (0101) |
|   1 +  2 =  3    |         AREA    QPEAK    TPEAK     R.V.
--------------------         (ha)    (cms)    (hrs)     (mm)
         ID1= 1 (0026):    21.85   1.362     7.50   116.45
       + ID2= 2 (0099):    47.39   2.632     8.00   122.69
         ================================================
         ID = 3 (0101):    69.24   3.897     7.83   120.72

    NOTE:  PEAK FLOWS DO NOT INCLUDE BASEFLOWS IF ANY.

--------------------------------------------------------------------------------
--------------------
| CALIB            |
| NASHYD    (0018) |   Area    (ha)=  16.34   Curve Number   (CN)= 65.0
|ID= 1 DT=10.0 min |   Ia      (mm)=   5.00   # of Linear Res.(N)= 3.00
--------------------   U.H. Tp(hrs)=    .59

    Unit Hyd Qpeak  (cms)=   1.058

    PEAK FLOW       (cms)=   1.046 (i)
    TIME TO PEAK    (hrs)=   7.167
    RUNOFF VOLUME    (mm)= 108.783
    TOTAL RAINFALL   (mm)= 193.000
    RUNOFF COEFFICIENT   =    .564

    (i) PEAK FLOW DOES NOT INCLUDE BASEFLOW IF ANY.

--------------------------------------------------------------------------------

--------------------
| ADD HYD   (0102) |
|   1 +  2 =  3    |         AREA    QPEAK    TPEAK     R.V.
--------------------         (ha)    (cms)    (hrs)     (mm)
         ID1= 1 (0101):    69.24   3.897     7.83   120.72
       + ID2= 2 (0018):    16.34   1.046     7.17   108.78
         ================================================
         ID = 3 (0102):    85.58   4.811     7.67   118.44

    NOTE:  PEAK FLOWS DO NOT INCLUDE BASEFLOWS IF ANY.

--------------------------------------------------------------------------------
--------------------
| CALIB            |
| STANDHYD  (0999) |   Area    (ha)=  11.29
|ID= 1 DT= 5.0 min |   Total Imp(%)=  50.00   Dir. Conn.(%)=  35.00
--------------------
                          IMPERVIOUS    PERVIOUS (i)
    Surface Area     (ha)=      5.64         5.64
    Dep. Storage     (mm)=      1.00         5.00
    Average Slope     (%)=      1.00         2.00
    Length            (m)=    274.30        40.00
    Mannings n          =      .013         .250

        NOTE:  RAINFALL WAS TRANSFORMED TO   5.0 MIN. TIME STEP.

                        ---- TRANSFORMED HYETOGRAPH ----
 TIME    RAIN |  TIME    RAIN |  TIME    RAIN |  TIME    RAIN
  hrs   mm/hr |   hrs   mm/hr |   hrs   mm/hr |   hrs   mm/hr
 .083   15.00 | 3.083    3.00 | 6.083   43.00 |  9.08   13.00
 .167   15.00 | 3.167    3.00 | 6.167   43.00 |  9.17   13.00
 .250   15.00 | 3.250    3.00 | 6.250   43.00 |  9.25   13.00
 .333   15.00 | 3.333    3.00 | 6.333   43.00 |  9.33   13.00
 .417   15.00 | 3.417    3.00 | 6.417   43.00 |  9.42   13.00
 .500   15.00 | 3.500    3.00 | 6.500   43.00 |  9.50   13.00
 .583   15.00 | 3.583    3.00 | 6.583   43.00 |  9.58   13.00
 .667   15.00 | 3.667    3.00 | 6.667   43.00 |  9.67   13.00
 .750   15.00 | 3.750    3.00 | 6.750   43.00 |  9.75   13.00
 .833   15.00 | 3.833    3.00 | 6.833   43.00 |  9.83   13.00
 .917   15.00 | 3.917    3.00 | 6.917   43.00 |  9.92   13.00
1.000   15.00 | 4.000    3.00 | 7.000   43.00 | 10.00   13.00
1.083   20.00 | 4.083    5.00 | 7.083   20.00 | 10.08   13.00
1.167   20.00 | 4.167    5.00 | 7.167   20.00 | 10.17   13.00
1.250   20.00 | 4.250    5.00 | 7.250   20.00 | 10.25   13.00
1.333   20.00 | 4.333    5.00 | 7.333   20.00 | 10.33   13.00
1.417   20.00 | 4.417    5.00 | 7.417   20.00 | 10.42   13.00
1.500   20.00 | 4.500    5.00 | 7.500   20.00 | 10.50   13.00
1.583   20.00 | 4.583    5.00 | 7.583   20.00 | 10.58   13.00
1.667   20.00 | 4.667    5.00 | 7.667   20.00 | 10.67   13.00
1.750   20.00 | 4.750    5.00 | 7.750   20.00 | 10.75   13.00
1.833   20.00 | 4.833    5.00 | 7.833   20.00 | 10.83   13.00
1.917   20.00 | 4.917    5.00 | 7.917   20.00 | 10.92   13.00
2.000   20.00 | 5.000    5.00 | 8.000   20.00 | 11.00   13.00
2.083   10.00 | 5.083   20.00 | 8.083   23.00 | 11.08    8.00
2.167   10.00 | 5.167   20.00 | 8.167   23.00 | 11.17    8.00
2.250   10.00 | 5.250   20.00 | 8.250   23.00 | 11.25    8.00
2.333   10.00 | 5.333   20.00 | 8.333   23.00 | 11.33    8.00
2.417   10.00 | 5.417   20.00 | 8.417   23.00 | 11.42    8.00
2.500   10.00 | 5.500   20.00 | 8.500   23.00 | 11.50    8.00
2.583   10.00 | 5.583   20.00 | 8.583   23.00 | 11.58    8.00
2.667   10.00 | 5.667   20.00 | 8.667   23.00 | 11.67    8.00
2.750   10.00 | 5.750   20.00 | 8.750   23.00 | 11.75    8.00
2.833   10.00 | 5.833   20.00 | 8.833   23.00 | 11.83    8.00
2.917   10.00 | 5.917   20.00 | 8.917   23.00 | 11.92    8.00
3.000   10.00 | 6.000   20.00 | 9.000   23.00 | 12.00    8.00

    Max.Eff.Inten.(mm/hr)=      43.00        42.36
              over (min)         5.00        20.00
    Storage Coeff.  (min)=       6.56 (ii)   16.51 (ii)
    Unit Hyd. Tpeak (min)=       5.00        20.00
    Unit Hyd. peak  (cms)=        .18          .06
                                                      *TOTALS*
    PEAK FLOW       (cms)=        .47          .62     1.088 (iii)
    TIME TO PEAK    (hrs)=       7.00         7.00        7.00
    RUNOFF VOLUME    (mm)=     192.00       121.55      146.21
    TOTAL RAINFALL   (mm)=     193.00       193.00      193.00
    RUNOFF COEFFICIENT   =        .99          .63         .76

      (i) CN PROCEDURE SELECTED FOR PERVIOUS LOSSES:
           CN*  =  65.0    Ia = Dep. Storage  (Above)
     (ii) TIME STEP (DT) SHOULD BE SMALLER OR EQUAL
          THAN THE STORAGE COEFFICIENT.
    (iii) PEAK FLOW DOES NOT INCLUDE BASEFLOW IF ANY.

--------------------------------------------------------------------------------

--------------------
| ADD HYD   (0103) |
|   1 +  2 =  3    |         AREA    QPEAK    TPEAK     R.V.
--------------------         (ha)    (cms)    (hrs)     (mm)
         ID1= 1 (0102):    85.58   4.811     7.67   118.44
       + ID2= 2 (0999):    11.29   1.088     7.00   146.21
         ================================================
         ID = 3 (0103):    96.87   5.437     7.50   121.68

    NOTE:  PEAK FLOWS DO NOT INCLUDE BASEFLOWS IF ANY.

--------------------------------------------------------------------------------

 FINISH
================================================================================================================
======
```

```
================================================================================================
======

       V    V   I    SSSSS  U   U    A    L
       V    V   I    SS     U   U   A A   L
        V  V    I     SS    U   U  AAAAA  L
        V  V    I      SS   U   U  A   A  L
         VV     I    SSSSS  UUUUU  A   A  LLLLL

        OOO   TTTTT  TTTTT  H   H  Y   Y  M   M   OOO    TM, Version 2.0
       O   O    T      T    H   H   Y Y   MM MM  O   O
       O   O    T      T    H   H    Y    M   M  O   O   Licensed To: Valdor Engineering
        OOO     T      T    H   H    Y    M   M   OOO                VO2-0102

Developed and Distributed by Greenland International Consulting Inc.
Copyright 1996, 2001 Schaeffer & Associates Ltd.
All rights reserved.

                  *****  D E T A I L E D   O U T P U T *****


  Input   filename: C:\Program Files\Visual OTTHYMO v2.0\voin.dat
  Output  filename: S:\Projects\2009\09123\Hydrotechnical\VO2\09123\09123\New Development.out
  Summary filename: S:\Projects\2009\09123\Hydrotechnical\VO2\09123\09123\New Development.sum


DATE: 11/27/2009                          TIME: 3:04:02 PM

USER:


COMMENTS: VO2 Model Output for New Developments

------------------------------------------------------------------------------------------------
------
  ***************************
  ** SIMULATION NUMBER:   1 ** 2-yr 3-hr Chicago Storm
  ***************************

--------------------
| CHICAGO STORM    |    IDF curve parameters: A= 808.793
| Ptotal= 30.68 mm |                          B=   7.421
--------------------                          C=    .835
                       used in:   INTENSITY =  A / (t + B)^C

                       Duration of storm  =  3.00 hrs
                       Storm time step    = 10.00 min
                       Time to peak ratio =   .33

                TIME    RAIN |  TIME    RAIN |  TIME    RAIN |  TIME    RAIN
                 hrs   mm/hr |   hrs   mm/hr |   hrs   mm/hr |   hrs   mm/hr
                 .17    2.51 |  1.00   74.39 |  1.83    4.74 |  2.67    2.38
                 .33    3.17 |  1.17   24.22 |  2.00    3.94 |  2.83    2.18
                 .50    4.33 |  1.33   12.16 |  2.17    3.38 |  3.00    2.00
                 .67    6.97 |  1.50    8.00 |  2.33    2.96 |
                 .83   18.18 |  1.67    5.95 |  2.50    2.64 |


------------------------------------------------------------------------------
--------------------
| CALIB            |
| STANDHYD  (0003) |   Area    (ha)=    .40
|ID= 1 DT= 5.0 min |   Total Imp(%)=  80.00   Dir. Conn.(%)=  80.00
--------------------
                              IMPERVIOUS    PERVIOUS (i)
     Surface Area     (ha)=        .32          .08
     Dep. Storage     (mm)=       1.00         5.00
     Average Slope     (%)=       1.00         2.00
     Length            (m)=      51.60        40.00
     Mannings n           =       .013         .250

         NOTE:  RAINFALL WAS TRANSFORMED TO   5.0 MIN. TIME STEP.

                        ---- TRANSFORMED HYETOGRAPH ----
                TIME    RAIN |  TIME    RAIN |  TIME    RAIN |  TIME    RAIN
                 hrs   mm/hr |   hrs   mm/hr |   hrs   mm/hr |   hrs   mm/hr
                .083    2.51 |  .833   18.18 | 1.583    5.95 |  2.33    2.96
                .167    2.51 |  .917   74.39 | 1.667    5.95 |  2.42    2.64
                .250    3.17 | 1.000   74.39 | 1.750    4.74 |  2.50    2.64
                .333    3.17 | 1.083   24.22 | 1.833    4.74 |  2.58    2.38
                .417    4.33 | 1.167   24.22 | 1.917    3.94 |  2.67    2.38
                .500    4.33 | 1.250   12.16 | 2.000    3.94 |  2.75    2.18
                .583    6.97 | 1.333   12.16 | 2.083    3.38 |  2.83    2.18
                .667    6.97 | 1.417    8.00 | 2.167    3.38 |  2.92    2.00
                .750   18.18 | 1.500    8.00 | 2.250    2.96 |  3.00    2.00

     Max.Eff.Inten.(mm/hr)=      74.39         8.70
               over (min)        5.00        10.00
     Storage Coeff.  (min)=       1.93 (ii)    6.50 (ii)
     Unit Hyd. Tpeak (min)=       5.00        10.00
     Unit Hyd. peak  (cms)=        .31          .14
                                                      *TOTALS*
     PEAK FLOW       (cms)=        .07          .00          .067 (iii)
     TIME TO PEAK    (hrs)=       1.00         1.08          1.00
     RUNOFF VOLUME    (mm)=      29.68         4.90         24.72
     TOTAL RAINFALL   (mm)=      30.68        30.68         30.68
     RUNOFF COEFFICIENT   =        .97          .16           .81

***** WARNING: STORAGE COEFF. IS SMALLER THAN TIME STEP!

       (i) CN PROCEDURE SELECTED FOR PERVIOUS LOSSES:
             CN*  =  70.0    Ia = Dep. Storage  (Above)
      (ii) TIME STEP (DT) SHOULD BE SMALLER OR EQUAL
           THAN THE STORAGE COEFFICIENT.
     (iii) PEAK FLOW DOES NOT INCLUDE BASEFLOW IF ANY.

------------------------------------------------------------------------------
--------------------
| CALIB            |
| STANDHYD  (0001) |   Area    (ha)=   6.60
|ID= 1 DT= 5.0 min |   Total Imp(%)=  50.00   Dir. Conn.(%)=  50.00
--------------------
                              IMPERVIOUS    PERVIOUS (i)
     Surface Area     (ha)=       3.30         3.30
     Dep. Storage     (mm)=       1.00         5.00
     Average Slope     (%)=       1.00         2.00
     Length            (m)=     209.80        40.00
     Mannings n           =       .013         .250

     Max.Eff.Inten.(mm/hr)=      74.39         6.31
               over (min)        5.00        30.00
     Storage Coeff.  (min)=       4.49 (ii)   25.80 (ii)
     Unit Hyd. Tpeak (min)=       5.00        30.00
     Unit Hyd. peak  (cms)=        .23          .04
                                                      *TOTALS*
     PEAK FLOW       (cms)=        .63          .03          .629 (iii)
     TIME TO PEAK    (hrs)=       1.00         1.50          1.00
     RUNOFF VOLUME    (mm)=      29.68         4.90         17.29
     TOTAL RAINFALL   (mm)=      30.68        30.68         30.68
     RUNOFF COEFFICIENT   =        .97          .16           .56

***** WARNING: STORAGE COEFF. IS SMALLER THAN TIME STEP!

       (i) CN PROCEDURE SELECTED FOR PERVIOUS LOSSES:
             CN*  =  70.0    Ia = Dep. Storage  (Above)
      (ii) TIME STEP (DT) SHOULD BE SMALLER OR EQUAL
           THAN THE STORAGE COEFFICIENT.
     (iii) PEAK FLOW DOES NOT INCLUDE BASEFLOW IF ANY.

------------------------------------------------------------------------------
--------------------
| CALIB            |
| STANDHYD  (0002) |   Area    (ha)=   1.50
|ID= 1 DT= 5.0 min |   Total Imp(%)=  90.00   Dir. Conn.(%)=  90.00
--------------------
                              IMPERVIOUS    PERVIOUS (i)
     Surface Area     (ha)=       1.35          .15
```

```
     Dep. Storage     (mm)=       1.00         5.00
     Average Slope     (%)=       1.00         2.00
     Length            (m)=     100.00        40.00
     Mannings n           =       .013         .250

     Max.Eff.Inten.(mm/hr)=      74.39        21.75
               over (min)        5.00        10.00
     Storage Coeff.  (min)=       2.88 (ii)    6.17 (ii)
     Unit Hyd. Tpeak (min)=       5.00        10.00
     Unit Hyd. peak  (cms)=        .28          .15
                                                      *TOTALS*
     PEAK FLOW       (cms)=        .27          .00          .274 (iii)
     TIME TO PEAK    (hrs)=       1.00         1.08          1.00
     RUNOFF VOLUME    (mm)=      29.68         4.90         27.20
     TOTAL RAINFALL   (mm)=      30.68        30.68         30.68
     RUNOFF COEFFICIENT   =        .97          .16           .89

***** WARNING: STORAGE COEFF. IS SMALLER THAN TIME STEP!

       (i) CN PROCEDURE SELECTED FOR PERVIOUS LOSSES:
            CN*  =  70.0    Ia = Dep. Storage  (Above)
      (ii) TIME STEP (DT) SHOULD BE SMALLER OR EQUAL
           THAN THE STORAGE COEFFICIENT.
     (iii) PEAK FLOW DOES NOT INCLUDE BASEFLOW IF ANY.

--------------------------------------------------------------------------------

-------------------
| ADD HYD   (0004) |
|   1 +  2 =  3    |         AREA    QPEAK    TPEAK     R.V.
-------------------          (ha)    (cms)    (hrs)     (mm)
         ID1= 1 (0001):     6.60    .629     1.00    17.29
       + ID2= 2 (0002):     1.50    .274     1.00    27.20
         ================================================
         ID = 3 (0004):     8.10    .904     1.00    19.13

     NOTE:  PEAK FLOWS DO NOT INCLUDE BASEFLOWS IF ANY.

--------------------------------------------------------------------------------

-------------------
| ADD HYD   (0005) |
|   1 +  2 =  3    |         AREA    QPEAK    TPEAK     R.V.
-------------------          (ha)    (cms)    (hrs)     (mm)
         ID1= 1 (0003):      .40    .067     1.00    24.72
       + ID2= 2 (0004):     8.10    .904     1.00    19.13
         ================================================
         ID = 3 (0005):     8.50    .971     1.00    19.39

     NOTE:  PEAK FLOWS DO NOT INCLUDE BASEFLOWS IF ANY.

--------------------------------------------------------------------------------
-------------------
| CHICAGO STORM    |    IDF curve parameters: A= 808.793
| Ptotal= 30.68 mm |                          B=   7.421
-------------------                          C=    .835
                        used in:   INTENSITY =  A / (t + B)^C

                        Duration of storm  =  3.00 hrs
                        Storm time step    = 10.00 min
                        Time to peak ratio =   .33

                TIME    RAIN |  TIME    RAIN |  TIME    RAIN |  TIME    RAIN
                 hrs   mm/hr |   hrs   mm/hr |   hrs   mm/hr |   hrs   mm/hr
                 .17    2.51 |  1.00   74.39 |  1.83    4.74 |  2.67    2.38
                 .33    3.17 |  1.17   24.22 |  2.00    3.94 |  2.83    2.18
                 .50    4.33 |  1.33   12.16 |  2.17    3.38 |  3.00    2.00
                 .67    6.97 |  1.50    8.00 |  2.33    2.96 |
                 .83   18.18 |  1.67    5.95 |  2.50    2.64 |


--------------------------------------------------------------------------------
-------------------
| CALIB            |
| STANDHYD  (0006) |   Area    (ha)=    .86
|ID= 1 DT= 5.0 min |   Total Imp(%)=  80.00   Dir. Conn.(%)=  80.00

-------------------
                              IMPERVIOUS    PERVIOUS (i)
     Surface Area     (ha)=       .69          .17
     Dep. Storage     (mm)=      1.00         5.00
     Average Slope     (%)=      1.00         2.00
     Length            (m)=     75.70        40.00
     Mannings n           =      .013         .250

         NOTE:  RAINFALL WAS TRANSFORMED TO   5.0 MIN. TIME STEP.


                              ---- TRANSFORMED HYETOGRAPH ----
               TIME    RAIN |  TIME    RAIN |  TIME    RAIN |  TIME    RAIN
                hrs   mm/hr |   hrs   mm/hr |   hrs   mm/hr |   hrs   mm/hr
               .083    2.51 |  .833   18.18 | 1.583    5.95 |  2.33    2.96
               .167    2.51 |  .917   74.39 | 1.667    5.95 |  2.42    2.64
               .250    3.17 | 1.000   74.39 | 1.750    4.74 |  2.50    2.64
               .333    3.17 | 1.083   24.22 | 1.833    4.74 |  2.58    2.38
               .417    4.33 | 1.167   24.22 | 1.917    3.94 |  2.67    2.38
               .500    4.33 | 1.250   12.16 | 2.000    3.94 |  2.75    2.18
               .583    6.97 | 1.333   12.16 | 2.083    3.38 |  2.83    2.18
               .667    6.97 | 1.417    8.00 | 2.167    3.38 |  2.92    2.00
               .750   18.18 | 1.500    8.00 | 2.250    2.96 |  3.00    2.00

     Max.Eff.Inten.(mm/hr)=      74.39         8.70
               over (min)        5.00        10.00
     Storage Coeff.  (min)=       2.43 (ii)    7.00 (ii)
     Unit Hyd. Tpeak (min)=       5.00        10.00
     Unit Hyd. peak  (cms)=        .30          .14
                                                      *TOTALS*
     PEAK FLOW       (cms)=        .14          .00          .143 (iii)
     TIME TO PEAK    (hrs)=       1.00         1.08          1.00
     RUNOFF VOLUME    (mm)=      29.68         4.90         24.72
     TOTAL RAINFALL   (mm)=      30.68        30.68         30.68
     RUNOFF COEFFICIENT   =        .97          .16           .81

***** WARNING: STORAGE COEFF. IS SMALLER THAN TIME STEP!

       (i) CN PROCEDURE SELECTED FOR PERVIOUS LOSSES:
            CN*  =  70.0    Ia = Dep. Storage  (Above)
      (ii) TIME STEP (DT) SHOULD BE SMALLER OR EQUAL
           THAN THE STORAGE COEFFICIENT.
     (iii) PEAK FLOW DOES NOT INCLUDE BASEFLOW IF ANY.

--------------------------------------------------------------------------------

-------------------
| ADD HYD   (0008) |
|   1 +  2 =  3    |         AREA    QPEAK    TPEAK     R.V.
-------------------          (ha)    (cms)    (hrs)     (mm)
         ID1= 1 (0005):     8.50    .971     1.00    19.39
       + ID2= 2 (0006):      .86    .143     1.00    24.72
         ================================================
         ID = 3 (0008):     9.36   1.113     1.00    19.88

     NOTE:  PEAK FLOWS DO NOT INCLUDE BASEFLOWS IF ANY.

--------------------------------------------------------------------------------
  ***************************
  ** SIMULATION NUMBER:   2 ** 5-yr 3-hr Chicago Storm
  ***************************

-------------------
| CHICAGO STORM    |    IDF curve parameters: A=1248.043
| Ptotal= 41.75 mm |                          B=   9.759
-------------------                          C=    .857
                        used in:   INTENSITY =  A / (t + B)^C

                        Duration of storm  =  3.00 hrs
                        Storm time step    = 10.00 min
                        Time to peak ratio =   .33

                TIME    RAIN |  TIME    RAIN |  TIME    RAIN |  TIME    RAIN
                 hrs   mm/hr |   hrs   mm/hr |   hrs   mm/hr |   hrs   mm/hr
                 .17    3.28 |  1.00   96.77 |  1.83    6.50 |  2.67    3.10
```

```
                .33    4.21 |  1.17   34.89 |  2.00    5.33 |  2.83    2.81
                .50    5.91 |  1.33   17.55 |  2.17    4.52 |  3.00    2.57
                .67    9.81 |  1.50   11.36 |  2.33    3.92 |
                .83   26.20 |  1.67    8.29 |  2.50    3.46 |


--------------------------------------------------------------------------------
-------------------
| CALIB             |
| STANDHYD  (0003) |   Area    (ha)=    .40
|ID= 1 DT= 5.0 min |   Total Imp(%)=  80.00   Dir. Conn.(%)=  80.00
-------------------
                           IMPERVIOUS    PERVIOUS (i)
     Surface Area     (ha)=        .32          .08
     Dep. Storage     (mm)=       1.00         5.00
     Average Slope     (%)=       1.00         2.00
     Length            (m)=      51.60        40.00
     Mannings n           =       .013         .250

         NOTE:  RAINFALL WAS TRANSFORMED TO   5.0 MIN. TIME STEP.


                            ---- TRANSFORMED HYETOGRAPH ----
               TIME    RAIN |  TIME    RAIN |  TIME    RAIN |  TIME    RAIN
                hrs   mm/hr |   hrs   mm/hr |   hrs   mm/hr |   hrs   mm/hr
               .083    3.28 |  .833   26.20 | 1.583    8.29 |  2.33    3.92
               .167    3.28 |  .917   96.77 | 1.667    8.29 |  2.42    3.46
               .250    4.21 | 1.000   96.77 | 1.750    6.50 |  2.50    3.46
               .333    4.21 | 1.083   34.89 | 1.833    6.50 |  2.58    3.10
               .417    5.91 | 1.167   34.89 | 1.917    5.33 |  2.67    3.10
               .500    5.91 | 1.250   17.55 | 2.000    5.33 |  2.75    2.81
               .583    9.81 | 1.333   17.55 | 2.083    4.52 |  2.83    2.81
               .667    9.81 | 1.417   11.36 | 2.167    4.52 |  2.92    2.57
               .750   26.20 | 1.500   11.36 | 2.250    3.92 |  3.00    2.57

     Max.Eff.Inten.(mm/hr)=      96.77        16.99
                 over (min)        5.00        10.00
     Storage Coeff.  (min)=       1.74 (ii)    5.85 (ii)
     Unit Hyd. Tpeak (min)=       5.00        10.00
     Unit Hyd. peak  (cms)=        .32          .15
                                                    *TOTALS*
     PEAK FLOW       (cms)=        .09          .00          .088 (iii)
     TIME TO PEAK    (hrs)=       1.00         1.08          1.00
     RUNOFF VOLUME    (mm)=      40.75         9.28         34.44
     TOTAL RAINFALL   (mm)=      41.75        41.75         41.75
     RUNOFF COEFFICIENT   =        .98          .22           .82

***** WARNING: STORAGE COEFF. IS SMALLER THAN TIME STEP!

       (i) CN PROCEDURE SELECTED FOR PERVIOUS LOSSES:
            CN*  =  70.0    Ia = Dep. Storage  (Above)
      (ii) TIME STEP (DT) SHOULD BE SMALLER OR EQUAL
           THAN THE STORAGE COEFFICIENT.
     (iii) PEAK FLOW DOES NOT INCLUDE BASEFLOW IF ANY.

--------------------------------------------------------------------------------
-------------------
| CALIB             |
| STANDHYD  (0001) |   Area    (ha)=   6.60
|ID= 1 DT= 5.0 min |   Total Imp(%)=  50.00   Dir. Conn.(%)=  50.00
-------------------
                           IMPERVIOUS    PERVIOUS (i)
     Surface Area     (ha)=       3.30         3.30
     Dep. Storage     (mm)=       1.00         5.00
     Average Slope     (%)=       1.00         2.00
     Length            (m)=     209.80        40.00
     Mannings n           =       .013         .250

     Max.Eff.Inten.(mm/hr)=      96.77        13.91
                 over (min)        5.00        20.00
     Storage Coeff.  (min)=       4.04 (ii)   19.57 (ii)
     Unit Hyd. Tpeak (min)=       5.00        20.00
     Unit Hyd. peak  (cms)=        .24          .06
                                                    *TOTALS*
     PEAK FLOW       (cms)=        .83          .07          .851 (iii)
     TIME TO PEAK    (hrs)=       1.00         1.33          1.00
     RUNOFF VOLUME    (mm)=      40.75         9.28         25.01
     TOTAL RAINFALL   (mm)=      41.75        41.75         41.75
     RUNOFF COEFFICIENT   =        .98          .22           .60

***** WARNING: STORAGE COEFF. IS SMALLER THAN TIME STEP!

       (i) CN PROCEDURE SELECTED FOR PERVIOUS LOSSES:
            CN*  =  70.0    Ia = Dep. Storage  (Above)
      (ii) TIME STEP (DT) SHOULD BE SMALLER OR EQUAL
           THAN THE STORAGE COEFFICIENT.
     (iii) PEAK FLOW DOES NOT INCLUDE BASEFLOW IF ANY.

--------------------------------------------------------------------------------
-------------------
| CALIB             |
| STANDHYD  (0002) |   Area    (ha)=   1.50
|ID= 1 DT= 5.0 min |   Total Imp(%)=  90.00   Dir. Conn.(%)=  90.00
-------------------
                           IMPERVIOUS    PERVIOUS (i)
     Surface Area     (ha)=       1.35          .15
     Dep. Storage     (mm)=       1.00         5.00
     Average Slope     (%)=       1.00         2.00
     Length            (m)=     100.00        40.00
     Mannings n           =       .013         .250

     Max.Eff.Inten.(mm/hr)=      96.77        42.47
                 over (min)        5.00        10.00
     Storage Coeff.  (min)=       2.59 (ii)    5.56 (ii)
     Unit Hyd. Tpeak (min)=       5.00        10.00
     Unit Hyd. peak  (cms)=        .29          .16
                                                    *TOTALS*
     PEAK FLOW       (cms)=        .36          .01          .362 (iii)
     TIME TO PEAK    (hrs)=       1.00         1.08          1.00
     RUNOFF VOLUME    (mm)=      40.75         9.28         37.60
     TOTAL RAINFALL   (mm)=      41.75        41.75         41.75
     RUNOFF COEFFICIENT   =        .98          .22           .90

***** WARNING: STORAGE COEFF. IS SMALLER THAN TIME STEP!

       (i) CN PROCEDURE SELECTED FOR PERVIOUS LOSSES:
            CN*  =  70.0    Ia = Dep. Storage  (Above)
      (ii) TIME STEP (DT) SHOULD BE SMALLER OR EQUAL
           THAN THE STORAGE COEFFICIENT.
     (iii) PEAK FLOW DOES NOT INCLUDE BASEFLOW IF ANY.

--------------------------------------------------------------------------------

-------------------
| ADD HYD   (0004) |
|   1 +  2 =  3    |         AREA    QPEAK    TPEAK     R.V.
-------------------          (ha)    (cms)    (hrs)     (mm)
          ID1= 1 (0001):     6.60    .851     1.00    25.01
        + ID2= 2 (0002):     1.50    .362     1.00    37.60
          ================================================
          ID = 3 (0004):     8.10   1.212     1.00    27.34

     NOTE:  PEAK FLOWS DO NOT INCLUDE BASEFLOWS IF ANY.

--------------------------------------------------------------------------------

-------------------
| ADD HYD   (0005) |
|   1 +  2 =  3    |         AREA    QPEAK    TPEAK     R.V.
-------------------          (ha)    (cms)    (hrs)     (mm)
          ID1= 1 (0003):      .40    .088     1.00    34.44
        + ID2= 2 (0004):     8.10   1.212     1.00    27.34
          ================================================
          ID = 3 (0005):     8.50   1.301     1.00    27.68

     NOTE:  PEAK FLOWS DO NOT INCLUDE BASEFLOWS IF ANY.

--------------------------------------------------------------------------------
-------------------
| CHICAGO STORM    |    IDF curve parameters: A= 808.793
| Ptotal= 30.68 mm |                          B=   7.421
-------------------                          C=    .835
```

used in: INTENSITY = A / (t + B)^C

Duration of storm = 3.00 hrs
Storm time step = 10.00 min
Time to peak ratio = .33

TIME hrs	RAIN mm/hr	TIME hrs	RAIN mm/hr	TIME hrs	RAIN mm/hr	TIME hrs	RAIN mm/hr
.17	2.51	1.00	74.39	1.83	4.74	2.67	2.38
.33	3.17	1.17	24.22	2.00	3.94	2.83	2.18
.50	4.33	1.33	12.16	2.17	3.38	3.00	2.00
.67	6.97	1.50	8.00	2.33	2.96		
.83	18.18	1.67	5.95	2.50	2.64		

CALIB
STANDHYD (0006)
ID= 1 DT= 5.0 min

Area (ha)= .86
Total Imp(%)= 80.00 Dir. Conn.(%)= 80.00

		IMPERVIOUS	PERVIOUS (i)
Surface Area	(ha)=	.69	.17
Dep. Storage	(mm)=	1.00	5.00
Average Slope	(%)=	1.00	2.00
Length	(m)=	75.70	40.00
Mannings n	=	.013	.250

NOTE: RAINFALL WAS TRANSFORMED TO 5.0 MIN. TIME STEP.

---- TRANSFORMED HYETOGRAPH ----

TIME hrs	RAIN mm/hr	TIME hrs	RAIN mm/hr	TIME hrs	RAIN mm/hr	TIME hrs	RAIN mm/hr
.083	2.51	.833	18.18	1.583	5.95	2.33	2.96
.167	2.51	.917	74.39	1.667	5.95	2.42	2.64
.250	3.17	1.000	74.39	1.750	4.74	2.50	2.64
.333	3.17	1.083	24.22	1.833	4.74	2.58	2.38
.417	4.33	1.167	24.22	1.917	3.94	2.67	2.38
.500	4.33	1.250	12.16	2.000	3.94	2.75	2.18
.583	6.97	1.333	12.16	2.083	3.38	2.83	2.18
.667	6.97	1.417	8.00	2.167	3.38	2.92	2.00
.750	18.18	1.500	8.00	2.250	2.96	3.00	2.00

				TOTALS
Max.Eff.Inten.(mm/hr)=		74.39	10.62	
over (min)		5.00	10.00	
Storage Coeff. (min)=		2.43 (ii)	7.00 (ii)	
Unit Hyd. Tpeak (min)=		5.00	10.00	
Unit Hyd. peak (cms)=		.30	.14	
PEAK FLOW	(cms)=	.14	.00	.143 (iii)
TIME TO PEAK	(hrs)=	1.00	1.08	1.00
RUNOFF VOLUME	(mm)=	29.68	4.90	24.72
TOTAL RAINFALL	(mm)=	30.68	30.68	30.68
RUNOFF COEFFICIENT	=	.97	.16	.81

***** WARNING: STORAGE COEFF. IS SMALLER THAN TIME STEP!

(i) CN PROCEDURE SELECTED FOR PERVIOUS LOSSES:
CN* = 70.0 Ia = Dep. Storage (Above)
(ii) TIME STEP (DT) SHOULD BE SMALLER OR EQUAL
THAN THE STORAGE COEFFICIENT.
(iii) PEAK FLOW DOES NOT INCLUDE BASEFLOW IF ANY.

ADD HYD (0008)
1 + 2 = 3

		AREA (ha)	QPEAK (cms)	TPEAK (hrs)	R.V. (mm)
ID1= 1 (0005):		8.50	1.301	1.00	27.68
+ ID2= 2 (0006):		.86	.143	1.00	24.72
ID = 3 (0008):		9.36	1.443	1.00	27.41

NOTE: PEAK FLOWS DO NOT INCLUDE BASEFLOWS IF ANY.

** SIMULATION NUMBER: 3 ** **10-yr 3-hr Chicago Storm**

CHICAGO STORM
Ptotal= 49.07 mm

IDF curve parameters: A=1486.840
B= 10.440
C= .859
used in: INTENSITY = A / (t + B)^C

Duration of storm = 3.00 hrs
Storm time step = 10.00 min
Time to peak ratio = .33

TIME hrs	RAIN mm/hr	TIME hrs	RAIN mm/hr	TIME hrs	RAIN mm/hr	TIME hrs	RAIN mm/hr
.17	3.88	1.00	111.32	1.83	7.76	2.67	3.67
.33	5.01	1.17	41.43	2.00	6.35	2.83	3.32
.50	7.04	1.33	21.00	2.17	5.37	3.00	3.04
.67	11.74	1.50	13.59	2.33	4.66		
.83	31.19	1.67	9.91	2.50	4.11		

CALIB
STANDHYD (0003)
ID= 1 DT= 5.0 min

Area (ha)= .40
Total Imp(%)= 80.00 Dir. Conn.(%)= 80.00

		IMPERVIOUS	PERVIOUS (i)
Surface Area	(ha)=	.32	.08
Dep. Storage	(mm)=	1.00	5.00
Average Slope	(%)=	1.00	2.00
Length	(m)=	51.60	40.00
Mannings n	=	.013	.250

NOTE: RAINFALL WAS TRANSFORMED TO 5.0 MIN. TIME STEP.

---- TRANSFORMED HYETOGRAPH ----

TIME hrs	RAIN mm/hr	TIME hrs	RAIN mm/hr	TIME hrs	RAIN mm/hr	TIME hrs	RAIN mm/hr
.083	3.88	.833	31.19	1.583	9.91	2.33	4.66
.167	3.88	.917	111.32	1.667	9.91	2.42	4.11
.250	5.01	1.000	111.32	1.750	7.76	2.50	4.11
.333	5.01	1.083	41.43	1.833	7.76	2.58	3.67
.417	7.04	1.167	41.43	1.917	6.35	2.67	3.67
.500	7.04	1.250	21.00	2.000	6.35	2.75	3.32
.583	11.74	1.333	21.00	2.083	5.37	2.83	3.32
.667	11.74	1.417	13.59	2.167	5.37	2.92	3.04
.750	31.19	1.500	13.59	2.250	4.66	3.00	3.04

				TOTALS
Max.Eff.Inten.(mm/hr)=		111.32	23.55	
over (min)		5.00	10.00	
Storage Coeff. (min)=		1.65 (ii)	5.53 (ii)	
Unit Hyd. Tpeak (min)=		5.00	10.00	
Unit Hyd. peak (cms)=		.32	.16	
PEAK FLOW	(cms)=	.10	.00	.102 (iii)
TIME TO PEAK	(hrs)=	1.00	1.08	1.00
RUNOFF VOLUME	(mm)=	48.07	12.70	40.99
TOTAL RAINFALL	(mm)=	49.07	49.07	49.07
RUNOFF COEFFICIENT	=	.98	.26	.84

***** WARNING: STORAGE COEFF. IS SMALLER THAN TIME STEP!

(i) CN PROCEDURE SELECTED FOR PERVIOUS LOSSES:
CN* = 70.0 Ia = Dep. Storage (Above)
(ii) TIME STEP (DT) SHOULD BE SMALLER OR EQUAL
THAN THE STORAGE COEFFICIENT.
(iii) PEAK FLOW DOES NOT INCLUDE BASEFLOW IF ANY.

```
--------------------
| CALIB            |
| STANDHYD  (0001) |   Area    (ha)=   6.60
|ID= 1 DT= 5.0 min |   Total Imp(%)=  50.00   Dir. Conn.(%)=  50.00
--------------------
                           IMPERVIOUS    PERVIOUS (i)
     Surface Area     (ha)=       3.30         3.30
     Dep. Storage     (mm)=       1.00         5.00
     Average Slope     (%)=       1.00         2.00
     Length            (m)=     209.80        40.00
     Mannings n           =       .013         .250

     Max.Eff.Inten.(mm/hr)=     111.32        20.39
               over (min)        5.00        20.00
     Storage Coeff.  (min)=       3.82 (ii)   17.15 (ii)
     Unit Hyd. Tpeak (min)=       5.00        20.00
     Unit Hyd. peak  (cms)=        .25          .06
                                                    *TOTALS*
     PEAK FLOW       (cms)=        .97          .11          .996 (iii)
     TIME TO PEAK    (hrs)=       1.00         1.33         1.00
     RUNOFF VOLUME    (mm)=      48.07        12.70        30.38
     TOTAL RAINFALL   (mm)=      49.07        49.07        49.07
     RUNOFF COEFFICIENT   =        .98          .26          .62

***** WARNING: STORAGE COEFF. IS SMALLER THAN TIME STEP!

       (i) CN PROCEDURE SELECTED FOR PERVIOUS LOSSES:
           CN*  =  70.0    Ia = Dep. Storage  (Above)
      (ii) TIME STEP (DT) SHOULD BE SMALLER OR EQUAL
           THAN THE STORAGE COEFFICIENT.
     (iii) PEAK FLOW DOES NOT INCLUDE BASEFLOW IF ANY.

--------------------------------------------------------------------------------
--------------------
| CALIB            |
| STANDHYD  (0002) |   Area    (ha)=   1.50
|ID= 1 DT= 5.0 min |   Total Imp(%)=  90.00   Dir. Conn.(%)=  90.00
--------------------
                           IMPERVIOUS    PERVIOUS (i)
     Surface Area     (ha)=       1.35          .15
     Dep. Storage     (mm)=       1.00         5.00
     Average Slope     (%)=       1.00         2.00
     Length            (m)=     100.00        40.00
     Mannings n           =       .013         .250

     Max.Eff.Inten.(mm/hr)=     111.32        58.87
               over (min)        5.00        10.00
     Storage Coeff.  (min)=       2.45 (ii)    5.26 (ii)
     Unit Hyd. Tpeak (min)=       5.00        10.00
     Unit Hyd. peak  (cms)=        .30          .16
                                                    *TOTALS*
     PEAK FLOW       (cms)=        .41          .01          .419 (iii)
     TIME TO PEAK    (hrs)=       1.00         1.08         1.00
     RUNOFF VOLUME    (mm)=      48.07        12.70        44.53
     TOTAL RAINFALL   (mm)=      49.07        49.07        49.07
     RUNOFF COEFFICIENT   =        .98          .26          .91

***** WARNING: STORAGE COEFF. IS SMALLER THAN TIME STEP!

       (i) CN PROCEDURE SELECTED FOR PERVIOUS LOSSES:
           CN*  =  70.0    Ia = Dep. Storage  (Above)
      (ii) TIME STEP (DT) SHOULD BE SMALLER OR EQUAL
           THAN THE STORAGE COEFFICIENT.
     (iii) PEAK FLOW DOES NOT INCLUDE BASEFLOW IF ANY.

--------------------------------------------------------------------------------

--------------------
| ADD HYD   (0004) |
|   1 +  2 =  3    |         AREA    QPEAK    TPEAK     R.V.
--------------------         (ha)    (cms)    (hrs)     (mm)
         ID1= 1 (0001):     6.60    .996     1.00    30.38
       + ID2= 2 (0002):     1.50    .419     1.00    44.53
         ================================================
         ID = 3 (0004):     8.10   1.415     1.00    33.00

     NOTE:  PEAK FLOWS DO NOT INCLUDE BASEFLOWS IF ANY.

--------------------------------------------------------------------------------

--------------------
| ADD HYD   (0005) |
|   1 +  2 =  3    |         AREA    QPEAK    TPEAK     R.V.
--------------------         (ha)    (cms)    (hrs)     (mm)
         ID1= 1 (0003):      .40    .102     1.00    40.99
       + ID2= 2 (0004):     8.10   1.415     1.00    33.00
         ================================================
         ID = 3 (0005):     8.50   1.517     1.00    33.38

     NOTE:  PEAK FLOWS DO NOT INCLUDE BASEFLOWS IF ANY.

--------------------------------------------------------------------------------
--------------------
| CHICAGO STORM    |    IDF curve parameters: A= 808.793
| Ptotal= 30.68 mm |                          B=   7.421
--------------------                          C=    .835
                         used in:   INTENSITY =  A / (t + B)^C

                         Duration of storm  =  3.00 hrs
                         Storm time step    = 10.00 min
                         Time to peak ratio =   .33

                TIME    RAIN |  TIME    RAIN |  TIME    RAIN |  TIME    RAIN
                 hrs   mm/hr |   hrs   mm/hr |   hrs   mm/hr |   hrs   mm/hr
                 .17    2.51 |  1.00   74.39 |  1.83    4.74 |  2.67    2.38
                 .33    3.17 |  1.17   24.22 |  2.00    3.94 |  2.83    2.18
                 .50    4.33 |  1.33   12.16 |  2.17    3.38 |  3.00    2.00
                 .67    6.97 |  1.50    8.00 |  2.33    2.96 |
                 .83   18.18 |  1.67    5.95 |  2.50    2.64 |

--------------------------------------------------------------------------------
--------------------
| CALIB            |
| STANDHYD  (0006) |   Area    (ha)=    .86
|ID= 1 DT= 5.0 min |   Total Imp(%)=  80.00   Dir. Conn.(%)=  80.00
--------------------
                           IMPERVIOUS    PERVIOUS (i)
     Surface Area     (ha)=        .69          .17
     Dep. Storage     (mm)=       1.00         5.00
     Average Slope     (%)=       1.00         2.00
     Length            (m)=      75.70        40.00
     Mannings n           =       .013         .250

         NOTE:  RAINFALL WAS TRANSFORMED TO   5.0 MIN. TIME STEP.

                              ---- TRANSFORMED HYETOGRAPH ----
                TIME    RAIN |  TIME    RAIN |  TIME    RAIN |  TIME    RAIN
                 hrs   mm/hr |   hrs   mm/hr |   hrs   mm/hr |   hrs   mm/hr
                .083    2.51 |  .833   18.18 | 1.583    5.95 |  2.33    2.96
                .167    2.51 |  .917   74.39 | 1.667    5.95 |  2.42    2.64
                .250    3.17 | 1.000   74.39 | 1.750    4.74 |  2.50    2.64
                .333    3.17 | 1.083   24.22 | 1.833    4.74 |  2.58    2.38
                .417    4.33 | 1.167   24.22 | 1.917    3.94 |  2.67    2.38
                .500    4.33 | 1.250   12.16 | 2.000    3.94 |  2.75    2.18
                .583    6.97 | 1.333   12.16 | 2.083    3.38 |  2.83    2.18
                .667    6.97 | 1.417    8.00 | 2.167    3.38 |  2.92    2.00
                .750   18.18 | 1.500    8.00 | 2.250    2.96 |  3.00    2.00

     Max.Eff.Inten.(mm/hr)=      74.39        14.72
               over (min)        5.00        10.00
     Storage Coeff.  (min)=       2.43 (ii)    7.00 (ii)
     Unit Hyd. Tpeak (min)=       5.00        10.00
     Unit Hyd. peak  (cms)=        .30          .14
                                                    *TOTALS*
     PEAK FLOW       (cms)=        .14          .00          .143 (iii)
     TIME TO PEAK    (hrs)=       1.00         1.08         1.00
     RUNOFF VOLUME    (mm)=      29.68         4.90        24.72
     TOTAL RAINFALL   (mm)=      30.68        30.68        30.68
     RUNOFF COEFFICIENT   =        .97          .16          .81
```

```
***** WARNING: STORAGE COEFF. IS SMALLER THAN TIME STEP!

       (i) CN PROCEDURE SELECTED FOR PERVIOUS LOSSES:
            CN*  =  70.0    Ia = Dep. Storage  (Above)
      (ii) TIME STEP (DT) SHOULD BE SMALLER OR EQUAL
           THAN THE STORAGE COEFFICIENT.
     (iii) PEAK FLOW DOES NOT INCLUDE BASEFLOW IF ANY.

--------------------------------------------------------------------------------

-------------------
| ADD HYD   (0008) |
|   1 +  2 =  3    |         AREA    QPEAK    TPEAK     R.V.
-------------------          (ha)    (cms)    (hrs)     (mm)
          ID1= 1 (0005):     8.50   1.517     1.00    33.38
        + ID2= 2 (0006):      .86    .143     1.00    24.72
          ================================================
          ID = 3 (0008):     9.36   1.660     1.00    32.58

     NOTE:  PEAK FLOWS DO NOT INCLUDE BASEFLOWS IF ANY.

--------------------------------------------------------------------------------

 FINISH
================================================================================================================
======
```

APPENDIX "D"

Preliminary Construction Cost Calculations for Drainage Outlet Options

Fenelon Falls Drainage Study (Basin DD) and Traffic Impact Study

City of Kawartha Lakes

VALDOR ENGINEERING INC.

File: 09123

November 2009

Table D.1: Summary of Preliminary Cost Estimates for the Initial Drainage Outlet Alternatives

Fenelon Falls Drainage Study (Basin DD)

Alternatives	Description	[1]Total with 20% Contingency ($)	
		Low	High
Option 1	Online Storage and Flow Control	3,672,000	
Option 2	Arena and Community Centre Only with the Outlet to West Street	818,100	916,200
Option 3	Arena and Community Centre Only with the Outlet to Bass Street	901,500	1,023,000
Option 4	Arena and Community Centre Only with the Outlet to Helen Street	1,138,500	1,341,000
Option 5	Arena and Community Centre Only with the Outlet to North Street	1,113,000	1,326,000
Option 6	Arena and the Other Proposed Developments with the Outlet to North Street	1,618,200	1,879,200

Note: 1-- the estimated costs include 20% contingency and exclude engineering fees and contract administration and inspection fees.

VALDOR ENGINEERING INC.

File: 09123

November 2009

Table D.2: Preliminary Cost Estimates for the Initial Drainage Outlet Alternatives

Fenelon Falls Drainage Study (Basin DD)

Alternatives	Storm Pipe Size (mm)	Excavation (m^3)	Excavation ($/$m^3$)	Length (m)		Unit Cost ($/m)			Subtotal ($)		[1]Total with 20% Contingency ($)	
				Pipe Under Road	Pipe Not Under Road	Pipe Under Road		Pipe Not Under Road	Low	High	Low	High
						Full Repair (with C. and G.)	Partial Repair					
Option 1	--	20,400	$150	--	--	--	--	--	3,060,000		**3,672,000**	
Option 2	600	--	--	327	273	$1,500	$1,250	$1,000	681,750	763,500	818,100	**916,200**
Option 3	600	--	--	405	245	$1,500	$1,250	$1,000	751,250	852,500	901,500	**1,023,000**
Option 4	600	--	--	675	105	$1,500	$1,250	$1,000	948,750	1,117,500	1,138,500	**1,341,000**
Option 5	600	--	--	710	40	$1,500	$1,250	$1,000	927,500	1,105,000	1,113,000	**1,326,000**
Option 6	975	--	--	870	n/a	$1,800	$1,550	--	1,348,500	1,566,000	1,618,200	**1,879,200**

Note: 1-- the estimated costs include 20% contingency and exclude engineering fees and contract administration and inspection fees.

VALDOR ENGINEERING INC.

File: 09123

November 2009

Table D.3: Summary of Preliminary Cost Estimates for the Refined Drainage Outlet Alternatives

Alternative Options	Design Criteria for the Proposed Development	Service Provided	Description	Total Cost
6A	2-yr post	All 3 Proposed Developments	New 900 mm pipe for North St. and Helen St. and the outlet pipe	$1,336,116
6B	5-yr post		New 975 mm pipe for North St. and Helen St. and the outlet pipe	$1,416,630
6C	2-yr post	Arena Only	New 600 mm pipe for North St. and Helen St. and outlet pipe assuming road improvements (C+G) to North Street *New 525 mm pipe for North St. and Helen St. and the outlet pipe assuming NO road improvements (C+G) to North Street*	$1,024,795
6D	5-yr post		New 675 mm pipe for North St. and Helen St. and outlet pipe assuming road improvements (C+G) to North Street *New 600 mm pipe for North St. and Helen St. and the outlet pipe assuming NO road improvements (C+G) to North Street*	$1,093,807
6E	2-yr post	Arena Only	New 600 mm pipe for North St. and replace with 900 mm pipe for Helen St. and with 1200 mm pipe to the outlet pipe assuming road improvements (C+G) to North Street *New 525 mm pipe for North St. and replace with 900 mm pipe for Helen St. and with 1200 mm pipe to the outlet pipe assuming NO road improvements (C+G) to North Street*	$1,183,997
6F	5-yr post	All 3 Proposed Developments	New 975 mm pipe for North St. and replace with 1200 mm pipe for Helen St. and with 1350 mm pipe fo the outlet pipe	$1,613,610

VALDOR ENGINEERING INC.

File: 09123

November 2009

Table D.4: Preliminary Cost Estimates for the Refined Drainage Outlet Options

Fenelon Falls Drainage Study (Basin DD)

Alternatives	Storm Sewer Length (m) and Size (mm)						Estimated Number of Maintenance Holes Req'd	Estimated Number of Catch Basins Req'd on North Street	[2,3,4]Unit Cost ($/m) (Under Road)														Subtotal ($)		[1]Total with 20% Contingency ($)	
											525 mm Pipe		600 mm Pipe		675 mm Pipe		900 mm Pipe		975 mm Pipe		1200 mm Pipe		1350 mm Pipe					
	North St.	Size	Helen St.	Size	Outlet	Size			Maintenance Holes ($/unit)	Catch Basin and Lead ($/unit)	Full Repair (with C. and G.)	Partial Repair	Full Repair (with C. and G.)	Partial Repair	Full Repair (with C. and G.)	Partial Repair	Full Repair (with C. and G.)	Partial Repair	Full Repair (with C. and G.)	Partial Repair	Full Repair (with C. and G.)	Partial Repair	Full Repair (with C. and G.)	Partial Repair	Low	High	Low	High
6A	366	*900*	205	*900*	68	*900*	*6*	*10*	*$5,000*	*$2,500*	*$1,378*	*$878*	*$1,464*	*$964*	*$1,554*	*$1,054*	*$1,870*	*$1,370*	*$1,975*	*$1,475*					*905,430*	*1,113,430*	1,086,516	**1,336,116**
6B	366	*975*	205	*975*	68	*975*	*6*	*10*																	*972,525*	*1,180,525*	1,167,030	**1,416,630**
6C	366	*525 (600 with full repair on North Street)*	205	*525 (600 with full repair on North Street)*	68	*525 (600 with full repair on North Street)*	*6*	*10*																	*591,042*	*853,996*	709,250	**1,024,795**
6D	366	*600 (675 with full repair on North Street)*	205	*600 (675 with full repair on North Street)*	68	*600 (675 with full repair on North Street)*	*6*	*10*																	*645,996*	*911,506*	775,195	**1,093,807**
6E	366	*525 (600 with full repair on North Street)*	205	*900*	68	*1200*	*10*	*10*			*$1,378*	*$878*					*$1,660*	*$1,160*			*$2,530*	*$2,030*			*747,188*	*986,664*	896,626	**1,183,997**
6F	366	*975*	205	*1200*	68	*1350*	*10*	*10*											*$1,845*	*$1,345*	*$2,625*	*$2,125*	*$2,835*	*$2,335*	*1,136,675*	*1,344,675*	1,364,010	**1,613,610**

Notes: 1 -- The estimated costs include 20% contingency and excludes engineering fees, contract administration and inspections.

2 -- Includes material cost, labor and rock excavation; excludes cost to relocate misc. existing underground infrastructure/services and land acquisition if required. Cost of storm outlet is based on assumed development area and land use as per discussions with the City.

3 -- Rock excavation estimated based on minimum cover requirement (1.2 m) and 0.5% assumed slope for storm sewer; Option 6A, 6B, 6C and 6D costs assume drop structure and additional rock excavation required to clear Lindsay St. storm sewer.

4 -- It is assumed that existing sanitary, water and other misc. services can be cleared with the proposed storm sewer installation.

5 -- For Alternative 6A, 6B and 6C, it is assumed that local drainage on North Street will continue to be conveyed by the existing roadside ditch for the "partial repair" condition. For the "full repair" condition, it is assumed that drainage from North Street up to the 2-yr storm will be collected in catchbasins and conveyed by the proposed North Street storm sewer.

APPENDIX "E"

Traffic Impact Study
Fenelon Falls Arena & Community Centre
and Other Identified Proposed Developments

Fenelon Falls Drainage Study (Basin DD)
and Traffic Impact Study

City of Kawartha Lakes

Traffic Impact Study

FENELON FALLS
ARENA & COMMUNITY CENTRE
And
OTHER IDENTIFIED PROPOSED DEVELOPMENTS

File: 2925

February 2010

February 9, 2010

City of Kawartha Lakes
Box 630
50 Wolfe Street
Lindsay ON K9V 2J2

Re: Traffic Impact Study
Proposed Arena & Community Centre
Fenelon Falls, City of Kawartha Lakes

Mark Engineering has completed the traffic impact study for the proposed arena and community centre to be located on the fair grounds in Fenelon Falls. The study also included the Wright development proposed to the southeast of the fair grounds and a small townhouse development east of the existing fair grounds access.

The conclusions of the study are:

1. The traffic volumes in the downtown area of Fenelon Falls are relatively consistent during the late morning to late afternoon during weekdays and Saturdays. The traffic volume levels on weekdays and Saturdays are also relatively consistent. That is, the peak hours and periods on summer days have similar traffic volumes.
2. There are two levels of usage that can be foreseen for the proposed area. The typical level would involve a sporting event, such as a hockey game, where the proposed 400 seats would be full. Typically this would happen in the evenings, but could occur during a Saturday afternoon.
3. Major events, such as a music concert, would occur much less frequently but would impose significant traffic demands on the capacity of the road system.
4. Fortunately, the existing road system generally has or can have sufficient capacity to serve these high demands.
5. Intersections where improvements may be required include:
    a. Colborne Street & Francis Street,
    b. Colborne Street/Lindsay Street & Helen Street, and
    c. Lindsay Street & Veterans Way
6. The improvements to the Colborne Street & Francis Street intersection include converting the two eastbound lanes to a combined left turn and through lane and a right turn only lane.
7. Improvements to the Colborne Street/Lindsay Street & Helen Street intersection include adding advanced green phases for the eastbound-to-northbound left turns and for the southbound-to-eastbound left turns.

8. Ideally, the southbound turning lanes at the Colborne Street/Lindsay Street & Helen Street intersection should be extended north, but this cannot be done since the bridge over the river controls the length of roadway available for such improvements.
9. A major event at the arena will place demands on the Lindsay Street & Veterans Way intersection that will exceed the capacity of the intersection. The intersection should be signalized to serve these demands.
10. An alternate solution would be to provide police control at the intersection during major events.
11. Of the three alternative traffic control configurations considered for the North Street/Veterans Way & fair grounds access intersection, a roundabout would provide the best level of service than would a single stop control or all-way stop control. A roundabout also has the flexibility to serve different levels of demands on the various approaches.
12. The unopened West Street right-of-way between Lindsay Street and North Street is not needed to provide additional capacity in the road system.

The recommendations drawn from the above are:

1. The two eastbound lanes at the Colborne Street & Francis Street should be converted to a combined left turn and through lane and a right turn only lane.
2. Advanced green phases should be implemented for the eastbound-to-northbound left turns and for the southbound-to-eastbound left turns at Colborne Street/Lindsay Street & Helen Street intersection.
3. The installation of fully-actuated traffic control signals at the Lindsay Street & Veterans Way intersection should be considered.
4. The North Street/Veterans Way & fair grounds access intersection should be reconstructed as a roundabout as part of the improvements associated with the construction of the arena and community centre.

Respectfully submitted

J.M. Mark, P.Eng.
Principal

EXECUTIVE SUMMARY

1. Introduction

The City of Kawartha Lakes is proposing to construct a new arena and a community centre on the fair grounds in Fenelon Falls in the City of Kawartha Lakes. The purpose of the traffic impact study for the proposed development is to:

- identify the additional traffic generated by the proposed development and other developments in the area,
- determine the impacts of this traffic on the surrounding road system, and
- identify any changes to the surrounding road system required to support the development.

The study area is generally bounded by the west limits of the fairgrounds, Helen Street, Francis Street on the north, Lindsay Street on the east and West Street on the south. The horizon years were 2010, 2015 and 2020.

2. Existing Conditions

The key roads are Lindsay Street/Colborne Street from West Street in the south to Francis Street on the north, Helen Street from Oriole Road on the west to Lindsay Street/Colborne Street, North Street and Veterans Way.

The key intersections analyzed were Colborne Street & Francis Street, Colborne Street & Water Street/Oak Street, Colborne Street/Lindsay Street & Helen Street, Lindsay Street & Veterans Way, Helen Street & North Street, Helen Street & Oriole Road and North Street & Veterans Way.

There is a mix of land uses surrounding the proposed development. The arena and community centre will be built on the fair ground site.

3. PROPOSED DEVELOPMENT

The arena is proposed to contain 400 seats. It will typically be used for sporting events. The parking requirements, based on an average of 3 persons per vehicle, would be in the order of 135 spaces. However, it could also be used for a major event, such as a rock concert.

The community centre will have a capacity of 300 people. The parking requirement would be in the order of 100 spaces.

Access to the complex would be via the existing access to the North Street & Veterans Way intersection

The proposed townhouse development in the east quadrant of the North Street & Veterans Way intersection will have 12 units.

The Wright property is proposed to contain a residential portion (R4) that could contain 150 units and a commercial portion (C1) that could up to 40,455 ft^2 of retail space.

4. TRAFFIC FORECASTS

Historical traffic volumes for Highway 35 between the Cambray Road and Powles Corners were used to determine annual growth rates used to forecast the 2010, 2015 and 2020 background traffic in the study area.

Two sets of trip generations were produced for the arena. The first was for a typical sporting event and the second for a major event such as a concert. The community centre trip generation was derived in a similar manner as for an arena. It was also assumed that the arena and community events would occur at the same time. This produces the worst case scenario.

The total development traffic assignments were combined with the future background traffic forecasts to produce the 2010, 2015 and 2020 total peak hour traffic forecasts.

5. TRAFFIC ANALYSIS

The analysis of the intersections indicated that most of them would operate at an acceptable level of service (with minor modifications) except for the Lindsay Street/Veterans Way and North Street/ Veterans Way intersections.

5.1 Lindsay Street & Veterans Way Intersection

The results indicate that traffic operations are very good except when there is a major event at the arena, the demands will greatly exceed the capacity of the intersection. There are two solutions to this.

Firstly, police could control the intersection during the peak periods so that drivers can enter and leave the intersection. Given that there will be a limited number of major events, this could be a viable solution.

The second option would be to install fully-actuated traffic control signals. If this were done, the overall operations of the intersection would be significantly better.

5.2 North Street & Veterans Way Intersection

This intersection is actually a bend in the road with a driveway to the west that is the access to the fair grounds. The three legs form a “Y” shape. There is a private right-of-way immediately south of the fair ground property that is 20± metres wide that could become a public road in the future when development is proposed to the south and southwest of the fair grounds. The intersection has to be configured such that it currently serves the fair ground access and will serve a public road in the private right-of-way when it ever becomes a public thoroughfare. Three configurations were examined.

5.2.1 Single Stop Controlled

This configuration is essentially the current situation, where the North Street/Veterans Way roadway is the through road and the fair grounds access is stop controlled. The analysis of this configuration indicates that the intersection will operate well, except for the eastbound movement out of the access, which will experience some delays.

5.2.2 All-Way Stop

Installing stop signs on all approaches is another solution. The analysis indicates that the intersection will provide a good level of service.

5.2.3 Roundabout

A small roundabout would create a situation where no movement would have to stop unnecessarily. At peak periods, vehicles entering the roundabout would have to slow down and yield to vehicles already in the roundabout, but they would not have to stop, which would minimize

the overall delays. The analysis indicates that the intersection will provide a very good level of service.

5.2.4 Comparisons of Control Configurations

The comparison of the operations of the three alternatives indicates that the roundabout will experience much lower total delays than the two stop control configurations. A similar relationship exists for volume/capacity ratios.

Therefore, a small roundabout would provide the best overall operations for this intersection.

The cost of a roundabout would be in the $60,000 range.

5.3 Other Improvements

There have questions raised regarding the need for the unopened West Street right-of-way between Lindsay Street and North Street, since if it is not needed, the Legion would like to have access to the lands to provide for additional parking. The above analysis indicates that the right-of-way is not needed to provide additional road capacity in the area. There may be a need to retain the right-of-way if there are underground services in the right-of-way.

6. RECOMMENDATIONS

The recommendations drawn from the above are:

1. The two eastbound lanes at the Colborne Street & Francis Street should be converted to a combined left turn and through lane and a right turn only lane.
2. Advanced green phases should be implemented for the eastbound-to-northbound left turns and for the southbound-to-eastbound left turns at Colborne Street/Lindsay Street & Helen Street intersection.
3. The installation of fully-actuated traffic control signals at the Lindsay Street & Veterans Way intersection should be considered.
4. The North Street/Veterans Way & fair grounds access intersection should be reconstructed as a roundabout as part of the improvements associated with the construction of the arena and community centre.

Table of Contents

Page

Executive Summary

1. Introduction 1

2. Existing Conditions 3
   - 2.1 Existing Roads 3
   - 2.2 Existing Intersections 3
   - 2.3 Existing Land Uses 4
   - 2.4 Existing Traffic 7

3. Proposed Development 8
   - 3.1 Arena and Community Centre 8
   - 3.2 Townhouse Development 8
   - 3.3 Wright Development 8

4. Traffic Forecasts 10
   - 4.1 Future Background Traffic 10
   - 4.2 Site Traffic 10
   - 4.3 Future Total Traffic 11

5. Traffic Analysis 12
   - 5.1 Colborne Street & Francis Street Intersection 12
   - 5.2 Colborne Street & Water Street Intersection 13
   - 5.3 Lindsay Street/Colborne Street & Helen Street Intersection 13
   - 5.4 Lindsay Street & Veterans Way Intersection 14
   - 5.5 Lindsay Street & West Street Intersection 16
   - 5.6 Helen Street & Oriole Road Intersection 17
   - 5.7 Helen Street & North Street Intersection 17
   - 5.8 North Street & Veterans Way Intersection 18
   - 5.9 Other Improvements 25

6. Conclusions and Recommendations 26
   - 6.1 Conclusions 26
   - 6.2 Recommendations 27

Tables

Turning Movement Diagrams

Traffic Analysis Outputs

1. INTRODUCTION

It is proposed to construct a new arena and a community centre on the fair grounds in Fenelon Falls in the City of Kawartha Lakes. The site of the project is shown in Figure 1.

Figure 1.1 – Site Location

Mark Engineering was retained to undertake a traffic impact study to:

- identify the additional traffic generated by the proposed development and other developments in the area,
- determine the impacts of this traffic on the surrounding road system, and
- identify any changes to the surrounding road system required to support the development.

The study area and the intersections analyzed are shown in Figure 1.2.

The study process generally followed the Ministry of Transportation guidelines for traffic impact studies.

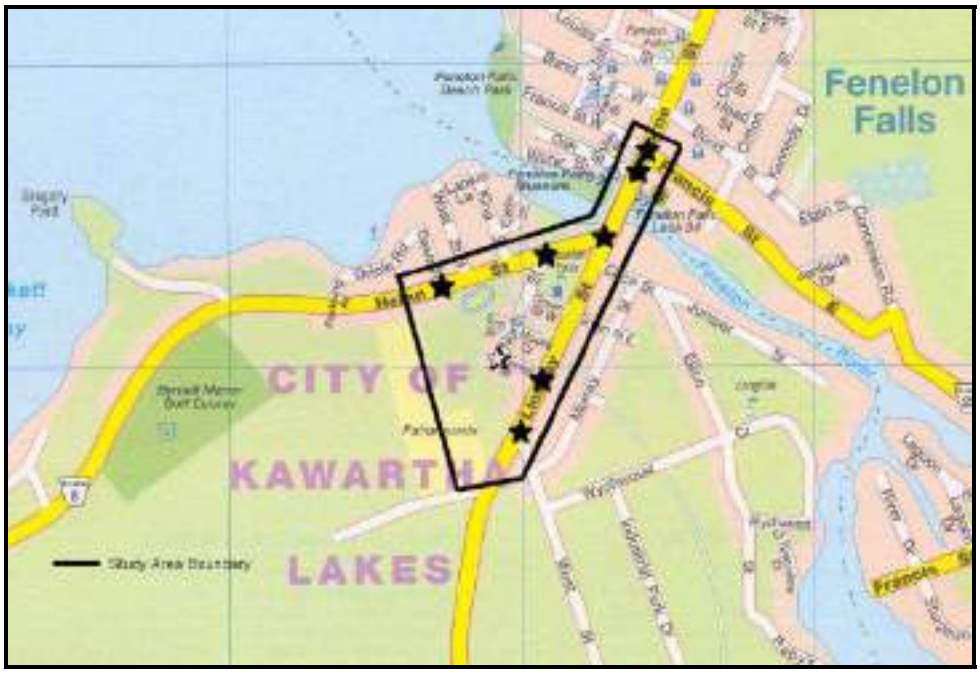

Figure 1.2 – Study Area

Since it is expected that the arena could be complete late next year, the horizon years were 2010, 2015 and 2020.

2. EXISTING CONDITIONS

2.1 Existing Roads

The key roads in the study area are:

Lindsay Street is a four-lane arterial road that runs south from the river to connect with Highway 35 at Powles Corners.

Colborne Street extends Lindsay Street north through the downtown area of Fenelon Falls. Between Helen Street and Water Street, the road is two lanes as it crosses the bridge over the Fenelon River. Further north, the roadway is wide enough for four lanes, although the curb lanes are generally used for parking. North of Princess Street, the road turns northeast.

Helen Street is a two-lane arterial road running west from Lindsay Street to connect with Highway 35.

Francis Street, in the vicinity of Colborne Street is four lanes wide, although the curb lanes are generally used for parking.

Water Street is a two lane road running west from Colborne Street. Traffic movement is one way westbound from Colborne Street, with the right hand lane generally used for parking.

Veterans Way (recently renamed from Francis Street) is a two lane local road running west from Lindsay Street. It turns north to become North Street, which runs north to Helen Street.

West Street runs south from Lindsay Street as a two lane roadway. The right-of-way runs north from Lindsay Street to Helen Street, although there is no roadway in the right-of-way.

2.2 Existing Intersections

The key intersections in the study area are:

The Colborne Street & Francis Street intersection is controlled by traffic signals. The northbound and southbound approaches have a left turn lane and a combined through and right turn lane. The westbound approach has one lane to serve all movements. There is a separate curb lane that is used for parking. The eastbound approach has two lanes. The left turn lane serves left turns and through movements and the right lane serves right turns and through movements. There are no separate signal phases.

The Colborne Street & Water Street/Oak Street intersection is controlled by stop signs on the westbound approach. There is a single lane on the westbound approach to serve all movements. There is a single lane on the southbound approach to serve all movements. The northbound approach has a left turn lane and a combined through and right turn lane. The Water Street leg has one westbound departure lane.

The Colborne Street/Lindsay Street & Helen Street intersection is controlled by traffic signals. The east leg is the access for a shopping centre. The westbound, northbound and eastbound approaches have a left turn lane and a combined through and right turn lane. The southbound approach has three lanes, one for each movement. The centre of the intersection is about 70 metres from the end of the bridge so that the length of the turn lanes is restricted to about 25± metres. There are no separate signal phases.

The Lindsay Street & Veterans Way intersection is controlled by stop signs on the eastbound and westbound approaches. The east leg is an access to a shopping centre and has a single lane to serve all outbound movements. The northbound and southbound approaches have two lanes. The left lane serves left turn and through movements, the right lane serves right turn and through movements. The eastbound approach is not marked for lanes. It operates for the most part as a single lane serving all movements. There is room to provide a left turn lane and a combined through and right turn lane.

The Lindsay Street & West Street intersection is currently a T-intersection. The northbound and southbound approaches have two lanes. The left lane serves left turn and through movements, the right lane serves right turn and through movements. The westbound approach is controlled by a stop sign and is not marked for lanes. It operates for the most part as a single lane serving all movements. The intersection is somewhat awkward since West Street intersects Lindsay Street at a 45±° angle.

The Helen Street & North Street intersection is a T-intersection and is controlled by a stop sign on the northbound (North Street) approach. All approaches have a single lane.

The Helen Street & Oriole Road intersection is a T-intersection and is controlled by a stop sign on the southbound (Oriole Road) approach. All approaches have a single lane.

The Veterans Way & North Street intersection is basically a right angled turn in the road way with the fair ground access intersecting the roadway from the west so that the overall layout forms a Y intersection. The fair grounds access is not paved.

The lane configurations are shown in Figure 2.1.

There is also a private, 20 metre wide right-of-way that runs west and southwest of the North Street & Veterans Way intersection.

2.3 Existing Land Uses

There is a mix of land uses surrounding the proposed development, as shown in Figure 4. The arena and community centre will be built on the fair ground site.

The lands in the south quadrant of the Veterans Way & North Street intersection is occupied by the Legion.

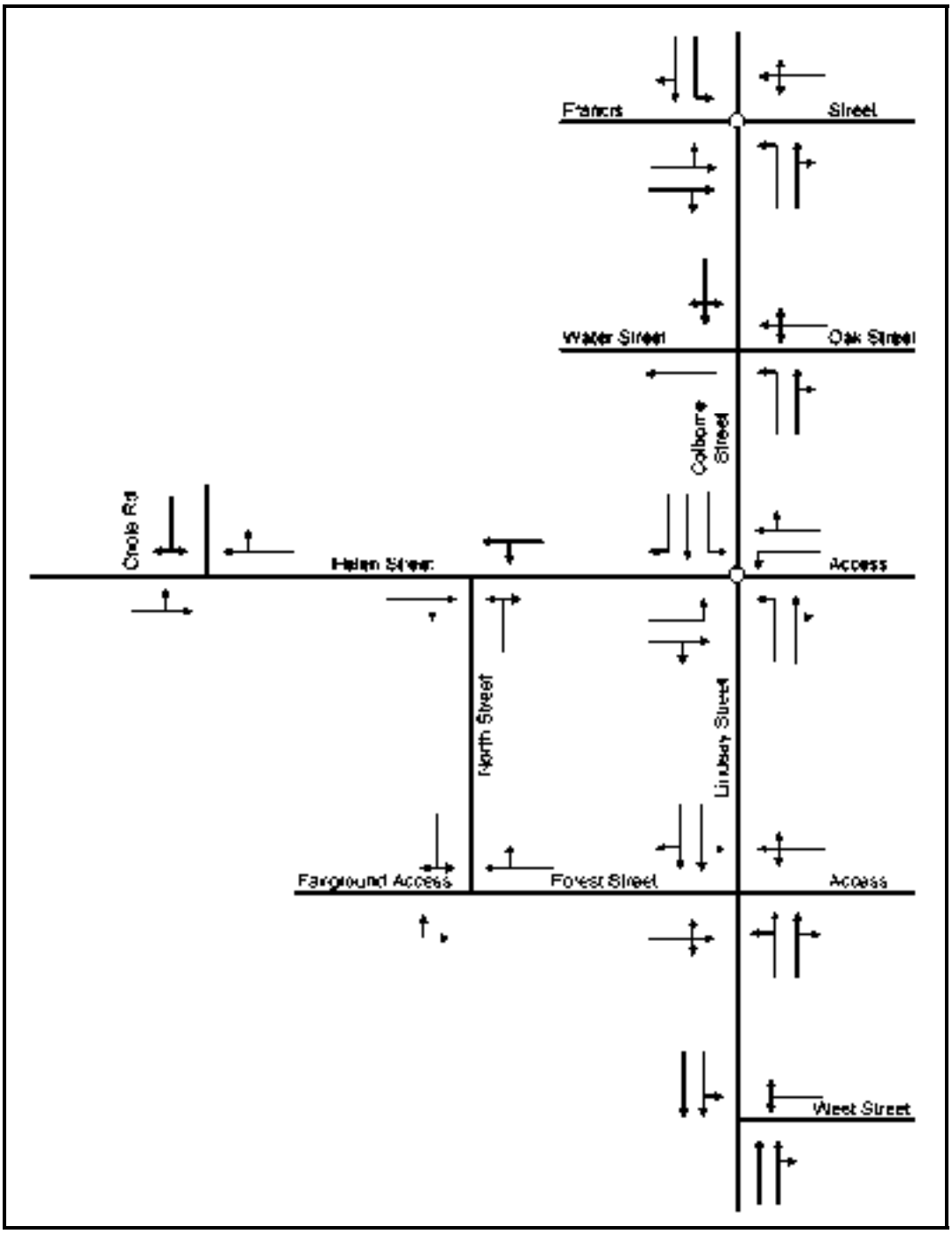

Figure 2.2 – Intersection Configurations

Figure 2.2 – Surrounding Land Uses

The lands in the east quadrant of the Veterans Way & North Street intersection is proposed for redevelopment with 12 townhouses.

There is mixed commercial development along Lindsay Street. The proposed Wright development is west of the existing commercial development along Lindsay Street and south of the fair ground. Although plans for the lands are not finalized, it is expected that the lands immediately south of the fair grounds will be residential and the lanes to the south that have frontage on Lindsay Street will be commercial.

The Fenelon Falls Secondary School occupies the block bounded by North Street on the west, Green Street on the south and Lindsay Street on the east. The track is located further to the west.

The remaining developed areas are generally occupied by residential uses.

2.4 Existing Traffic

Traffic data came from a number of sources. The City has carried out automatic traffic recorder (ATR) counts at a number of locations in the study area. There were turning movement counts done for the 2006 traffic impact study done for the proposed Sobey's development east of the Lindsay Street/Colborne Street & Helen Street intersection.

Since some of the key intersections had not been counted and since the existing counts were done at different times and years, turning movement counts were done at the key intersections on Wednesday, July 29, 2009 and Saturday, July 25, 2009. These summer counts represent the design volumes to be used in forecasting and analysis.

The volumes during the weekday were relatively constant from mid-morning to late afternoon. Therefore, one peak hour was selected to be analyzed. Similarly, the volumes during the Saturday were relatively constant from noon to late afternoon and one peak hour was selected for analysis. The peak hours counted are shown in Diagrams 1 & 2.

3. PROPOSED DEVELOPMENT

3.1 Arena and Community Centre

The arena is proposed to contain 400 seats. It will typically be used for sporting events.

The parking requirements, based on an average of 3 persons per vehicle, would be in the order of 135 spaces.

However, it could also be used for a major event, such as a rock concert. During this type of event, seating could be provided on the rink service. Some of permanent seating would not be used due to lack of sight lines to a temporary stage that would be set up on the rink surface. A major event of this magnitude would only likely be scheduled for a Saturday afternoon or in the evenings when background traffic would be lower than during the afternoon peak hours.

The parking requirements for a major event, based on an average of 3 persons per vehicle, would be in the order of 575 spaces.

The community centre will have a capacity of 300 people. The parking requirement would be in the order of 100 spaces.

The analysis has assumed that the arena and community centre are both operating at capacity at the same time. While, this is unlikely to happen, it is the worst case scenario as far as traffic is concerned.

Access to the complex would be via the existing access to the North Street & Veterans Way intersection. If the private right-of-way (proposed road on Figure 3.1) is converted to a public road, then the fair grounds access should be moved to intersect this new roadway.

3.2 Townhouse Development

The proposed townhouse development in the east quadrant of the North Street & Veterans Way intersection will have 12 units. It is assumed that the access would be at the north end of the North Street frontage.

3.3 Wright Development

The details of the development on the Wright property are not available since a formal proposal has not been made. One of the plans that has been discussed is shown in Figure 3.1. The site is bounded by the existing commercial that fronts onto Lindsay Street and Lindsay Street on the south, a private road on the southwest, a neighbouring property on the northwest, an existing private right-of-way (shown as a proposed road) on the north and the unopened right-of-way for West Street on the southeast. The residential portion (R4) could contain 150 units. The commercial portion (C1) has an area of 1.88 Ha, and at a floor space index of 0.20, could contain up to 40,455 ft^2 of retail space.

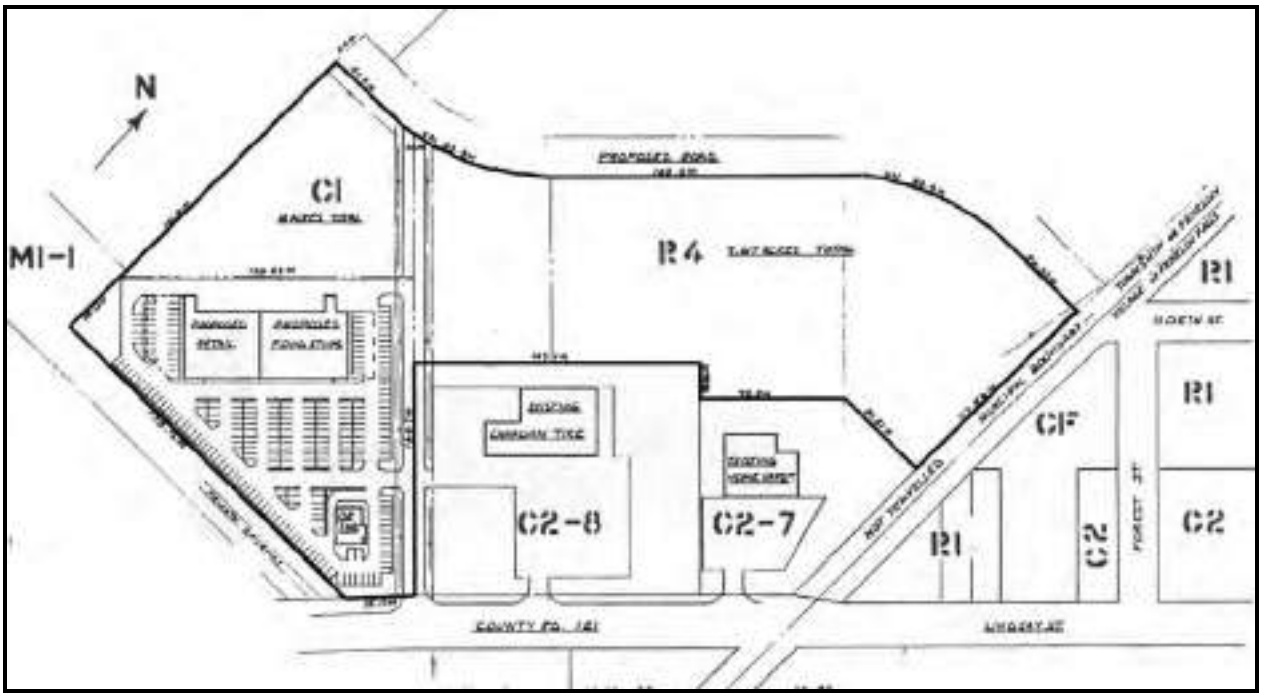

Figure 3.1 – Proposed Wright Development (not to scale)

Access to the residential component would be via the “proposed road”.

4. TRAFFIC FORECASTS

4.1 Future Background Traffic

The historical summer average daily traffic (SADT) and summer average weekday traffic (SAWDT) volumes were obtained from the Ministry of Transportation for Highway 35 between the Cambray Road and Powles Corners. It was assumed that the background traffic in Fenelon Falls would grow at a rate similar to that of the traffic on the highway. The data was plotted to determine if the data would be used to produce growth rates that could be used to forecast future background volumes in Fenelon Falls. In both cases, a straight line with a high r^2 value could be calculated. The data and the forecasts are shown in Tables A1 & A2.

The average annual growth rates were in the range of 1.8 to 2.0%. A rate of 2% was used to determine growth factors that were applied to the counted volumes in Diagrams 1 & 2 to produce the future 2010, 2015 and 2020 peak hour background volumes shown in Diagrams 3 to 8.

4.2 Site Traffic

4.2.1 Trip Generation

Two sets of trip generations were produced for the arena. The first was for a typical sporting event and the second for a major event such as a concert. There is a dearth of trip generation data for arenas. Accordingly, the derivation of the trip generation for the arena was based on basic principles, as shown in Table A3. In both cases, it was assumed that vehicle occupancy would be 3 people per vehicle during the inbound and outbound peak hours. There were assumptions made for trips by bus and by walking. In the case of a typical sporting event, it was assumed that 1% of the attendees would come by bus: for a major event, the percentage was 5%. It was also assumed for both cases that the 55% of the inbound traffic would occur during the inbound peak hour and 80% of the outbound traffic would occur during the outbound peak hour.[1] It was also assumed that 12% of the peak hour attendees would be dropped off and/or picked up.

It was also assumed that the inbound and outbound peak hour for a typical sporting event would overlap. Therefore, the inbound and outbound traffic was added together for the weekday scenario. It was not assumed that the inbound and outbound peak hours would overlap for a major event. It was assumed that the background peak hour traffic would be the same. Consequently, there were two peak hour scenarios analyzed for a Saturday.

The community centre trip generation was derived in a similar manner as for an arena sporting event, as shown in Table A4

It was also assumed that the arena and community events would occur at the same time. This produces the worst case scenario.

[1] Based on modal and directional split assumption from the Traffic Impact Report for the Stadium at Rentschler Field in Connecticut

The trip generation rates for the townhouse development were taken from the 8th Edition of the Institute of Transportation Engineers' Trip Generation report. The derivation of the peak hour trips is shown in Table A5.

The trip generation for the Wright development was also calculated using rates from of the Institute of Transportation Engineers' Trip Generation report. It was assumed that there were no pass-by commercial trips. The derivation of the peak hour trips is shown in Table A5.

Also included in the analysis was the traffic generated by the existing high school. It was assumed that this traffic would be generated mainly by students for the weekday and by an event at the school on a typical Saturday. Again, the derivation of the peak hour trips is shown in Table A5.

4.2.2 Trip Distribution

The trip distribution was based on the traffic volumes into and out of the key intersections. The derivation is shown in Table A6.

4.2.3 Trip Assignment

The distribution was applied to the trip generation to produce the individual trip assignment for each land use as shown in Diagrams 9 to 21. The total development traffic assignments are shown in Diagrams 22 to 24.

4.3 Future Total Traffic

The total development traffic assignments were combined with the future background traffic forecasts to produce the 2010, 2015 and 2020 total peak hour traffic forecasts shown in Diagrams 25 to 27, 28 to 30 and 31 to 33 respectively.

5. TRAFFIC ANALYSIS

The analysis of the volume/capacity ratios and levels of service was done using Version 4.1 of the Highway Capacity Software. The summary sheets are attached. The full outputs are available if required. It was assumed that the signalized intersections would operate in a fully-actuated mode. Therefore, the times presented in the output sheets for these intersections are average times, since the length of the display will vary in accordance with the volumes on the approaches.

5.1 Colborne Street & Francis Street Intersection

The analysis of this fully-actuated signalized intersection produced the following results:

Table 5.1 - Colborne Street & Francis Street Intersection Overall Operations

	Weekday Peak Hour			Saturday Inbound Peak Hour			Saturday Outbound Peak Hour		
Scenario	Average Delay/ Vehicle (s)	Level of Service[2]	Volume/ Capacity Ratio	Average Delay/ Vehicle (s)	Level of Service	Volume/ Capacity Ratio	Average Delay/ Vehicle (s)	Level of Service	Volume/ Capacity Ratio
2010 Background	11.9	B	0.52	13.2	B	0.53	13.2	B	0.53
2010 Total	16.3	B	0.71	17.9	B	0.78	21.1	C	0.87
2015 Background	12.7	B	0.59	15.1	B	0.75	15.1	B	0.75
2015 Total	18.7	B	0.77	28.2	C	0.93	26.1	C	0.89
2020 Background	13.8	B	0.65	18.7	B	0.84	18.7	B	0.84
2020 Total	28.7	C	0.90	47.1	D	0.94	37.6	D	0.97

It was assumed for the total traffic scenarios that the eastbound approach would be repainted to provide a combined left turn and through movement lane and a separate right turn lane. Other alternative were examined that required changes to the traffic signal plant, such as adding

[2] Level of service is a qualifying measure of traffic operations at an intersection. The following table summarizes the relationship between Level of Service (LOS) and average stopped delay per vehicle for both signalized and unsignalized intersections. The table also presents the relationship between Level of Service and volume to capacity ratio.

Level of Service	Stopped Delay per Vehicle (seconds/vehicle)		Volume to Capacity Ratio
	Signalized Intersections	Unsignalized Intersections	
A	≤ 10.0	≤10.0	≤ 0.60
B	> 10.0 and ≤ 20.0	> 10.0 and ≤ 15.0	> 0.60 and ≤ 0.70
C	> 20.0 and ≤ 35.0	> 15.0 and ≤ 25.0	> 0.70 and ≤ 0.80
D	> 35.0 and ≤ 55.0	> 25.0 and ≤ 35.0	> 0.80 and ≤ 0.90
E	> 55.0 and ≤ 80.0	> 35.0 and ≤ 50.0	> 0.90 and ≤ 1.00
F	> 80.0	> 50.0	> 1.00

separate left turn displays. However, the assumed alternative would be the cheapest and easiest to implement.

The results of this analysis indicate that intersection operates and will operate at a good level of service until approximately 2020 when the intersection will operate at an acceptable level of service on a Saturday when there is a major event at the arena.

5.2 Colborne Street & Water Street Intersection

The key movement at this unsignalized intersection is the northbound-to-westbound left turn movement. The westbound traffic experiences significant delays, but the volumes are relatively low so that the volume/capacity ratios are also low. This indicates that westbound drivers will have to wait some time for adequate gaps to occur. The results of the analysis for the northbound-to-westbound left turn movement are:

Table 5.2 - Colborne Street & Water Street Intersection Northbound-To-Westbound Left Turn Operations

	Weekday Peak Hour			Saturday Inbound Peak Hour			Saturday Outbound Peak Hour		
Scenario	Average Delay/ Vehicle (s)	Level of Service	Volume/ Capacity Ratio	Average Delay/ Vehicle (s)	Level of Service	Volume/ Capacity Ratio	Average Delay/ Vehicle (s)	Level of Service	Volume/ Capacity Ratio
2010 Background	9.6	A	0.10	10.8	B	0.17	10.8	B	0.17
2010 Total	10.9	B	0.16	13.7	B	0.26	12.7	B	0.26
2015 Background	10.0	A	0.12	11.6	B	0.21	11.6	B	0.21
2015 Total	11.5	B	0.18	15.2	C	0.31	13.9	B	0.31
2020 Background	10.5	B	0.14	12.6	B	0.25	12.6	B	0.25
2020 Total	12.2	B	0.21	17.2	C	0.37	15.6	C	0.37

The results indicate that the intersection operates and will operate at a good level of service. The results for the southbound direction are similar, but slightly lower than for the northbound-to-westbound left turns.

5.3 Lindsay Street/Colborne Street & Helen Street Intersection

The analysis of this signalized intersection produced the results shown in Table 5.3.

The analyses of the total traffic scenarios assumed that advanced green phases would be added to the eastbound and southbound approaches. The 2020 total traffic analysis also assumed that

a westbound right turn display that would be displayed when the southbound advanced green was displayed.

Table 5.3 – Lindsay Street/Colborne Street & Helen Street Intersection Overall Operations

	Weekday Peak Hour			Saturday Inbound Peak Hour			Saturday Outbound Peak Hour		
Scenario	Average Delay/ Vehicle (s)	Level of Service	Volume/ Capacity Ratio	Average Delay/ Vehicle (s)	Level of Service	Volume/ Capacity Ratio	Average Delay/ Vehicle (s)	Level of Service	Volume/ Capacity Ratio
2010 Background	11.8	B	0.46	14.7	B	0.67	14.7	B	0.67
2010 Total	23.7	C	0.89	25.1	C	0.92	39.1	D	0.96
2015 Background	12.6	B	0.53	17.5	B	0.77	17.5	B	0.77
2015 Total	27.5	C	0.86	31.2	C	0.92	43.8	D	0.98
2020 Background	16.7	B	0.77	34.9	C	0.94	34.9	C	0.94
2020 Total	31.8	C	0.94	33.0	C	0.95	47.6	D	1.10

The results indicate that the intersection operates and will operate at a good level of service except for the Saturday outbound peak hour when a major event lets out. The intersection will operate at or close to capacity during the Saturday outbound peak hour when a major event lets out. In the case of the Saturday outbound peak hour for the 2020 total traffic scenario, the volume/capacity ratio indicates that the demand will exceed the capacity.

Adding capacity to the intersection by adding lanes would be a very expensive project due to the close proximity of existing buildings and the bridge over the river. In these situations, drivers who anticipate the expected congestion will change their routes to avoid the congestion, will depart earlier or later and/or will suffer the congestion and the peak “hour” will become longer. Given that the worst case scenario that was analyzed may not occur frequently, it is suggested that the intersection be monitored whenever there is a major event at the arena so that actual data can be used to analyze the intersection’s operations and to determine what, if any, measures can economically be implemented to mitigate any traffic congestion.

5.4 Lindsay Street & Veterans Way Intersection

The key movement at this unsignalized intersection is the eastbound movement. The other key movements all operate at a better level of service than this movement. The analysis of the background traffic scenarios assume that the approach operates as a combined left turn, through and right turn lane. The analysis of the total traffic scenarios assumed that there is a separate left turn lane and a combined through and right turn lane. The results of the analysis of this intersection are shown in Table 5.4.

Table 5.4 – Lindsay Street & Veterans Way Intersection – Eastbound Operations									
	Weekday Peak Hour			Saturday Inbound Peak Hour			Saturday Outbound Peak Hour		
Scenario	Average Delay/ Vehicle (s)	Level of Service	Volume/ Capacity Ratio	Average Delay/ Vehicle (s)	Level of Service	Volume/ Capacity Ratio	Average Delay/ Vehicle (s)	Level of Service	Volume/ Capacity Ratio
2010 Background	11.5	B	0.05	14.8	B	0.17	14.8	B	0.17
2010 Total	53.1	F	0.63	**224.7**	**F**	**1.14**	**445.4**	**F**	**1.82**
2015 Background	12.0	B	0.05	14.5	B	0.17	14.5	B	0.17
2015 Total	68.3	F	0.71	**321.7**	**F**	**1.36**	**595.9**	**F**	**2.15**
2020 Background	12.7	B	0.07	18.2	C	0.25	18.2	C	0.25
2020 Total	93.6	F	0.82	**474.1**	**F**	**1.69**	**791.5**	**F**	**2.56**

The results indicate that the background traffic operations are very good. During the weekday peak hours for the total traffic scenarios, the delays are significant. The volume/capacity ratios indicate that there will be sufficient gaps to serve the demands. However, drivers will have to wait for the gaps to occur.

When there is a major event at the arena, the demands will greatly exceed the capacity of the intersection. The volume/capacity ratios are all over 1.00. There are two solutions to this.

Firstly, police could control the intersection during the peak periods so that drivers can enter and leave the intersection. Given that there will be a limited number of events of major events, this could be a viable solution.

The second option would be to install fully-actuated traffic control signals. If this were done, the overall operations of the intersection would be significantly better, as shown in Table 5.5. The cost for the installation of traffic control signals would be in the $120,000 to $150,000 range.

These results indicate that the intersection will provide very good operations overall and that the eastbound left turns will experience significant less delay.

Table 5.5 – Lindsay Street & Veterans Way Intersection – Signalized Operations									
	Weekday Peak Hour			Saturday Inbound Peak Hour			Saturday Outbound Peak Hour		
Scenario	Average Delay/ Vehicle (s)	Level of Service	Volume/ Capacity Ratio	Average Delay/ Vehicle (s)	Level of Service	Volume/ Capacity Ratio	Average Delay/ Vehicle (s)	Level of Service	Volume/ Capacity Ratio
2010 Overall	9.4	A	0.42	9.7	A	0.53	14.5	B	0.59
2010 EB Left Turns	22.3	C	0.43	22.1	C	0.43	19.6	B	0.62
2015 Overall	9.5	A	0.45	10.0	B	0.56	14.9	B	0.63
2015 EB Left Turns	22.4	C	0.43	22.4	C	0.44	19.9	B	0.61
2020 Overall	9.4	A	0.47	10.4	B	0.61	14.5	B	0.67
2020 Left Turns	22.6	C	0.45	22.6	C	0.45	27.0	C	0.76

5.5 Lindsay Street & West Street Intersection

The key movement at this intersection is the combined westbound movement. The results of the analysis for this movement are:

Table 5.6 – Lindsay Street & West Street Intersection – Westbound Combined Movement									
	Weekday Peak Hour			Saturday Inbound Peak Hour			Saturday Outbound Peak Hour		
Scenario	Average Delay/ Vehicle (s)	Level of Service	Volume/ Capacity Ratio	Average Delay/ Vehicle (s)	Level of Service	Volume/ Capacity Ratio	Average Delay/ Vehicle (s)	Level of Service	Volume/ Capacity Ratio
2010 Background	11.1	B	0.07	13.3	B	0.11	13.3	B	0.11
2010 Total	13.4	B	0.13	18.2	C	0.16	17.7	C	0.17
2015 Background	11.7	B	0.08	14.4	B	0.13	14.4	B	0.13
2015 Total	14.4	B	0.16	20.6	C	0.20	20.0	C	0.21
2020 Background	12.3	B	0.09	16.0	C	0.16	15.5	C	0.18
2020 Total	15.5	C	0.18	23.8	C	0.25	23.7	C	0.26

The results indicate that the intersection provides and will provide good levels of service.

5.6 Helen Street & Oriole Road Intersection

The key movement at this unsignalized T-intersection is the southbound combined left and right turns. The results of the analysis of this movement are:

Table 5.7 – Helen Street & Oriole Road Intersection – Southbound Combined Movement

	Weekday Peak Hour			Saturday Inbound Peak Hour			Saturday Outbound Peak Hour		
Scenario	Average Delay/ Vehicle (s)	Level of Service	Volume/ Capacity Ratio	Average Delay/ Vehicle (s)	Level of Service	Volume/ Capacity Ratio	Average Delay/ Vehicle (s)	Level of Service	Volume/ Capacity Ratio
2010 Background	11.3	B	0.02	14.4	B	0.03	14.4	B	0.03
2010 Total	12.5	B	0.02	17.0	C	0.03	17.8	C	0.03
2015 Background	11.6	B	0.02	15.3	C	0.03	15.3	C	0.03
2015 Total	12.8	B	0.03	18.2	C	0.04	19.3	C	0.05
2020 Background	11.9	B	0.02	16.5	C	0.04	16.5	C	0.04
2020 Total	13.2	B	0.03	19.9	C	0.05	20.9	C	0.05

The results indicate that the intersection provides and will provide a good level of service.

5.7 Helen Street & North Street Intersection

The key movement at this unsignalized T-intersection is the northbound combined left and right turns. The results of the analysis of this movement are shown in Table 5.8.

The results indicate that drivers making turns onto Helen Street will experience significant delays. The volume/capacity ratios indicate that there will be sufficient gaps to serve the demand. However, drivers will have to wait for the gaps to occur.

Table 5.8 – Helen Street & North Street Intersection – Northbound Combined Movement									
	Weekday Peak Hour			Saturday Inbound Peak Hour			Saturday Outbound Peak Hour		
Scenario	Average Delay/ Vehicle (s)	Level of Service	Volume/ Capacity Ratio	Average Delay/ Vehicle (s)	Level of Service	Volume/ Capacity Ratio	Average Delay/ Vehicle (s)	Level of Service	Volume/ Capacity Ratio
2010 Background	11.8	B	0.09	16.2	C	0.15	16.2	C	0.15
2010 Total	23.7	C	0.61	36.6	E	0.59	55.7	F	0.86
2015 Background	12.2	B	0.10	18.2	C	0.19	18.2	C	0.19
2015 Total	26.7	D	0.66	49.5	E	0.70	58.8	F	0.87
2020 Background	13.1	B	0.13	20.7	C	0.23	20.7	C	0.23
2020 Total	32.0	D	0.72	68.7	F	0.80	90.9	F	1.00

5.8 North Street & Veterans Way Intersection

This intersection is actually a bend in the road with a driveway to the west that is the access to the fair grounds. The three legs form a "Y" shape. The west leg of the intersection is currently the fairgrounds access. There is a private right-of-way immediately south of the fair ground property that is 20± metres wide that could become a public road in the future when development is proposed to the south and southwest of the fair grounds. If this were to occur, then the fairgrounds access could be moved west along the new public road. The following alternatives show this public road in place. However, the existing fairgrounds access can remain as it is now until such time as the transfer of the private right-of-way to the City is completed. Three configurations were examined.

5.8.1 Single Stop Controlled

This configuration is essentially the current situation, where the North Street/Veterans Way roadway is the through road and the fair grounds access is stop controlled. Figure 5.1 shows the intersection with the private right-of-way as a public road and the fairgrounds access moved to the public road. The key movement is the eastbound approach of the fair grounds access that serves both left and right turns[3]. The results of the analysis of this configuration are shown in Table 5.9.

[3] The programme outputs assume that both North Street and Veterans Way are a continuous north-south street for computational purposes.

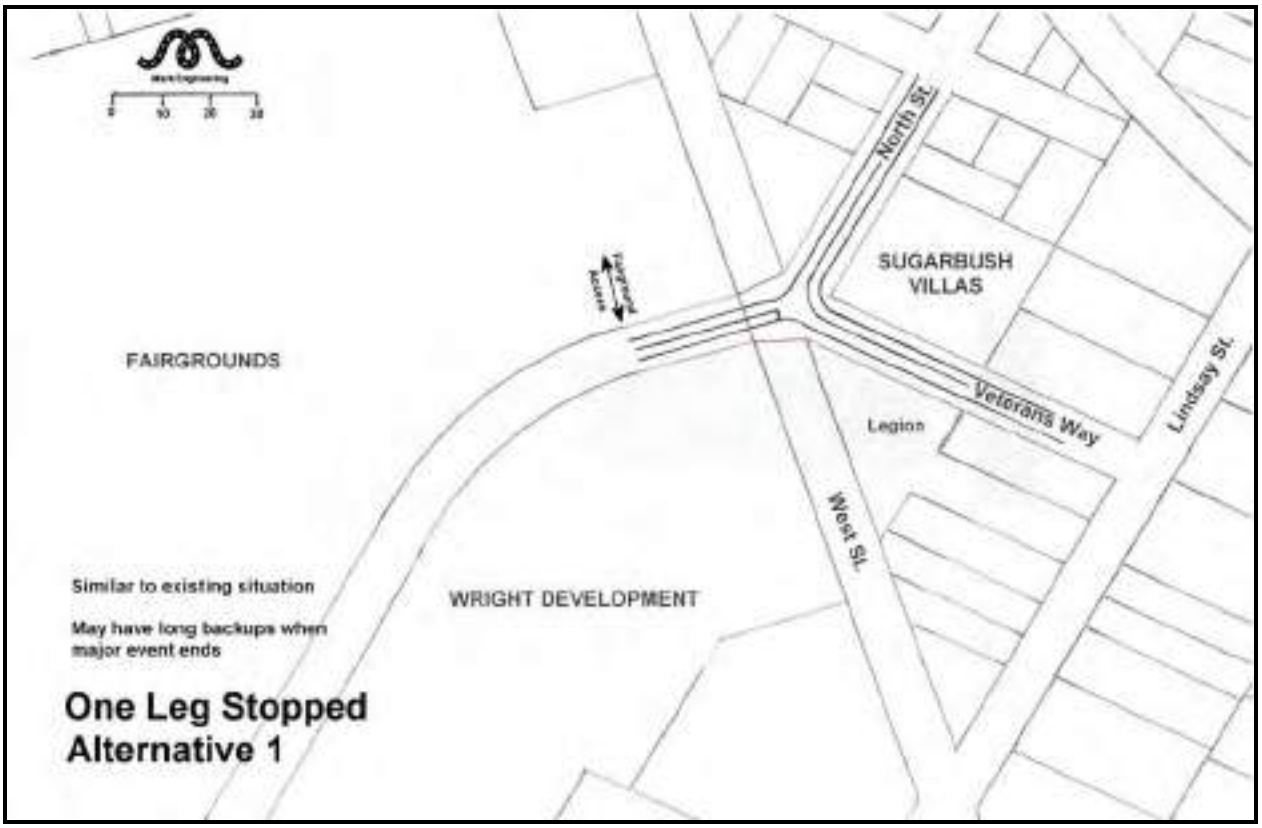

Figure 5.1 – One Leg Stopped

Table 5.9 – North Street & Veterans Way Intersection – Single Stop Condition - Fair Grounds Access Eastbound Combined Operations

	Weekday Peak Hour			Saturday Inbound Peak Hour			Saturday Outbound Peak Hour		
Scenario	Average Delay/ Vehicle (s)	Level of Service	Volume/ Capacity Ratio	Average Delay/ Vehicle (s)	Level of Service	Volume/ Capacity Ratio	Average Delay/ Vehicle (s)	Level of Service	Volume/ Capacity Ratio
2010 Total	14.7	B	0.43	19.0	C	0.45	33.8	D	0.88
2015 Total	14.8	B	0.43	19.2	C	0.45	34.7	D	0.89
2020 Total	15.0	C	0.44	19.6	C	0.46	36.4	E	0.90

The results indicate that the intersection will operate well, except for the eastbound movement out of the access, which will experience some delays.

5.8.2 All-Way Stop

Installing stop signs on all approaches is another solution. Figure 5.2 shows the intersection with the private right-of-way as a public road and the fairgrounds access moved to the public road. The overall results for this type of operation are shown in Table 5.10.

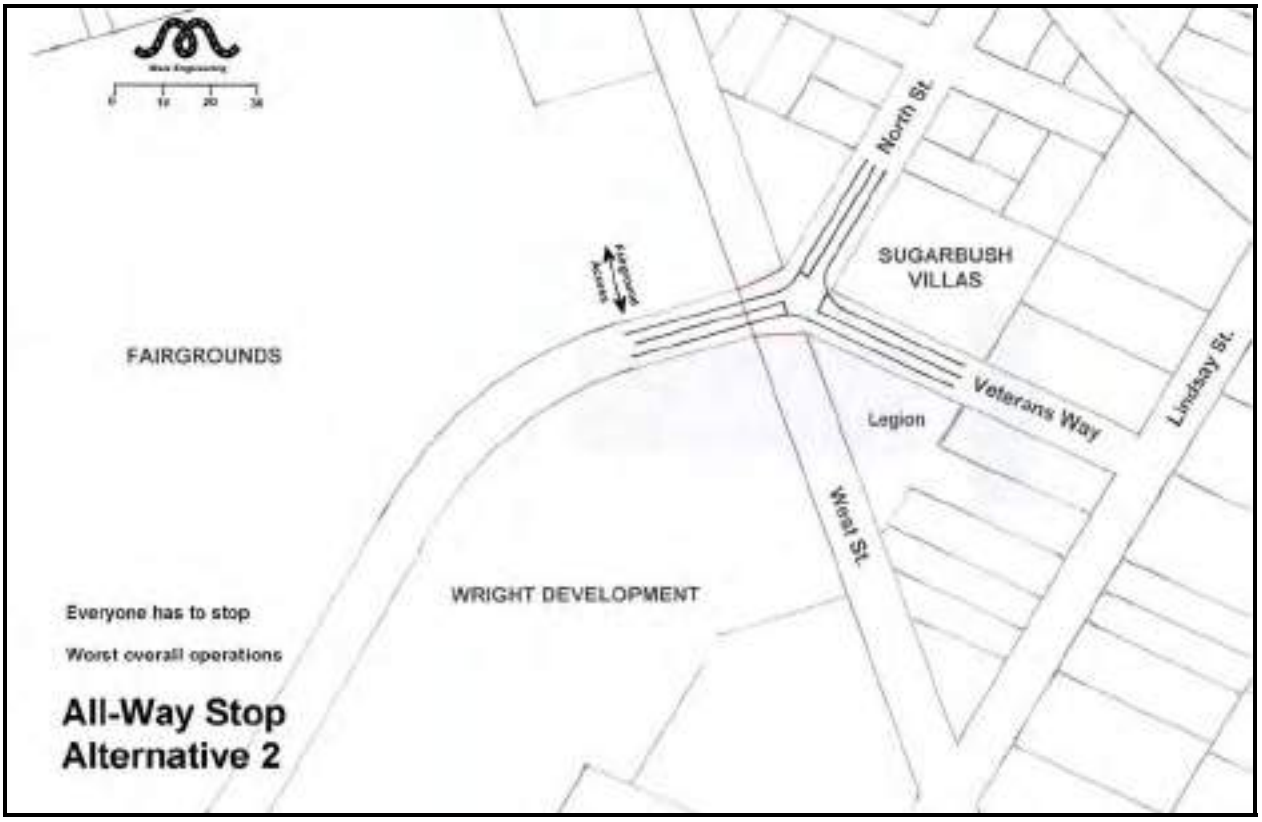

Figure 5.2 – All-Way Stop

The results indicate that the intersection will provide a good level of service.

Table 5.10 – North Street & Veterans Way Intersection – All-Way Stop Condition – Overall Operations

	Weekday Peak Hour			Saturday Inbound Peak Hour			Saturday Outbound Peak Hour		
Scenario	Average Delay/ Vehicle (s)	Level of Service	Volume/ Capacity Ratio	Average Delay/ Vehicle (s)	Level of Service	Volume/ Capacity Ratio	Average Delay/ Vehicle (s)	Level of Service	Volume/ Capacity Ratio
2010 Total	10.0	B	0.49	11.8	B	0.53	23.5	C	0.63
2015 Total	10.1	B	0.49	11.9	B	0.53	23.8	C	0.63
2020 Total	10.1	B	0.49	11.9	B	0.54	23.8	C	0.63

The results indicate that the intersection will provide a good level of service.

5.8.3 Roundabout

A small roundabout would create a situation where no movement would have to stop unnecessarily. Figure 5.3 shows the intersection with the private right-of-way as a public road and the fairgrounds access moved to the public road. At peak periods, vehicles entering the roundabout would have to slow down and yield to vehicles already in the roundabout, but they would not have to stop, which would minimize the overall delays. While the HCS program does not calculate average delay per vehicle for roundabouts. it does calculate volume/capacity ratios. The average delays per vehicle can be calculation as shown in Table A7. The results of the analysis are:

Table 5.11 – North Street & Veterans Way Intersection – Roundabout – Overall Operations

	Weekday Peak Hour			Saturday Inbound Peak Hour			Saturday Outbound Peak Hour		
Scenario	Average Delay/ Vehicle (s)	Level of Service	Volume/ Capacity Ratio	Average Delay/ Vehicle (s)	Level of Service	Volume/ Capacity Ratio	Average Delay/ Vehicle (s)	Level of Service	Volume/ Capacity Ratio
2010 Total	4.5	A	0.23	5.1	A	0.28	7.3	A	0.32
2015 Total	4.5	A	0.23	5.1	A	0.28	7.3	A	0.33
2020 Total	4.5	A	0.23	5.2	A	0.29	7.3	A	0.33

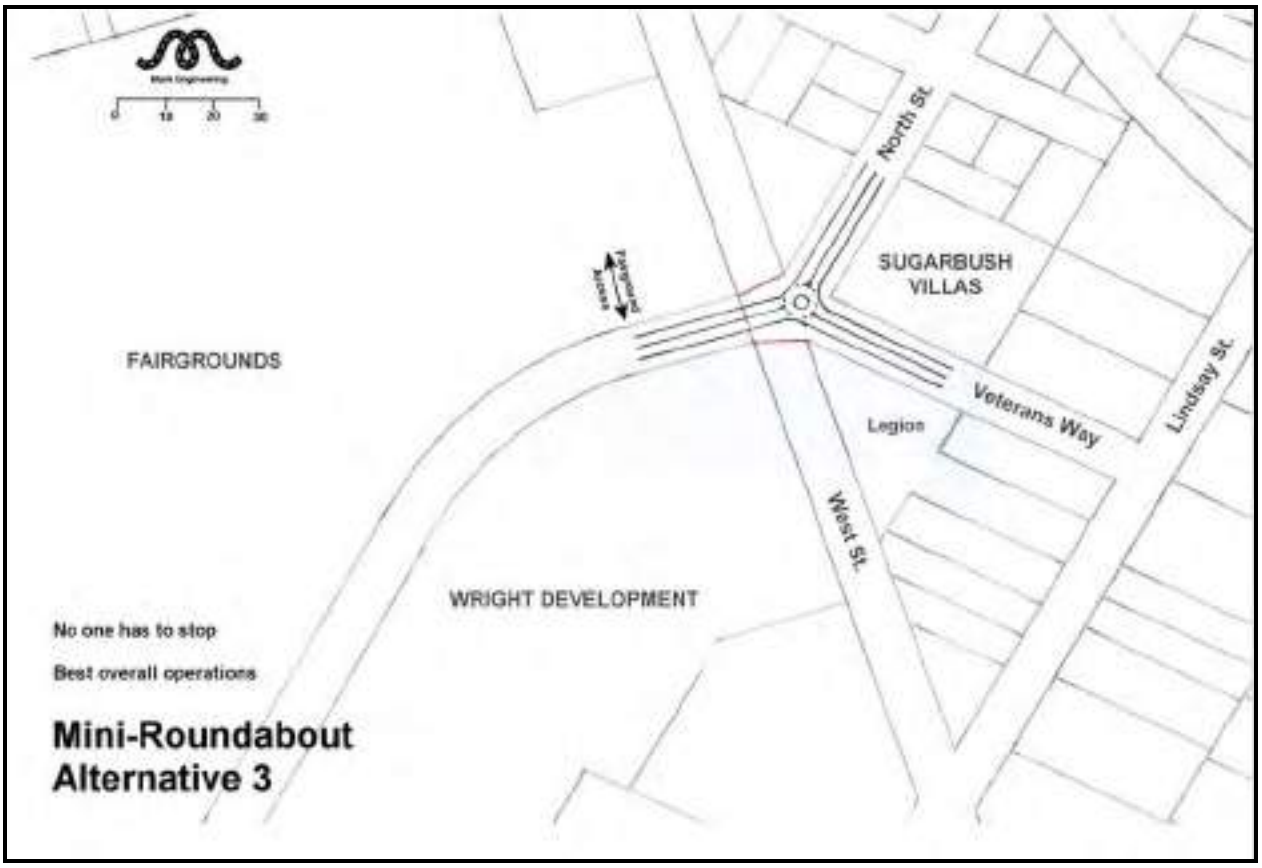

Figure 5.3 – Mini-Roundabout

The low volume/capacity ratios indicate that the roundabout would provide a very good level of service.

The average delays per vehicle were calculated using a simple queuing model and are shown in Table A7.

5.8.4 Construction Costs

All three alternatives would require the construction of the third leg of the intersection.

The extra costs for the stop controlled alternatives would basically include the installation of the stop signs. One stop sign would cost in the order of $250 to $500. Three stop signs would cost in the order of $750 to $1,000. The extra costs for the roundabout would include additional pavement, the centre island and yield signs. A preliminary estimate for the cost, based on the functional plan shown in Figure 5.4, would be about $60,000.

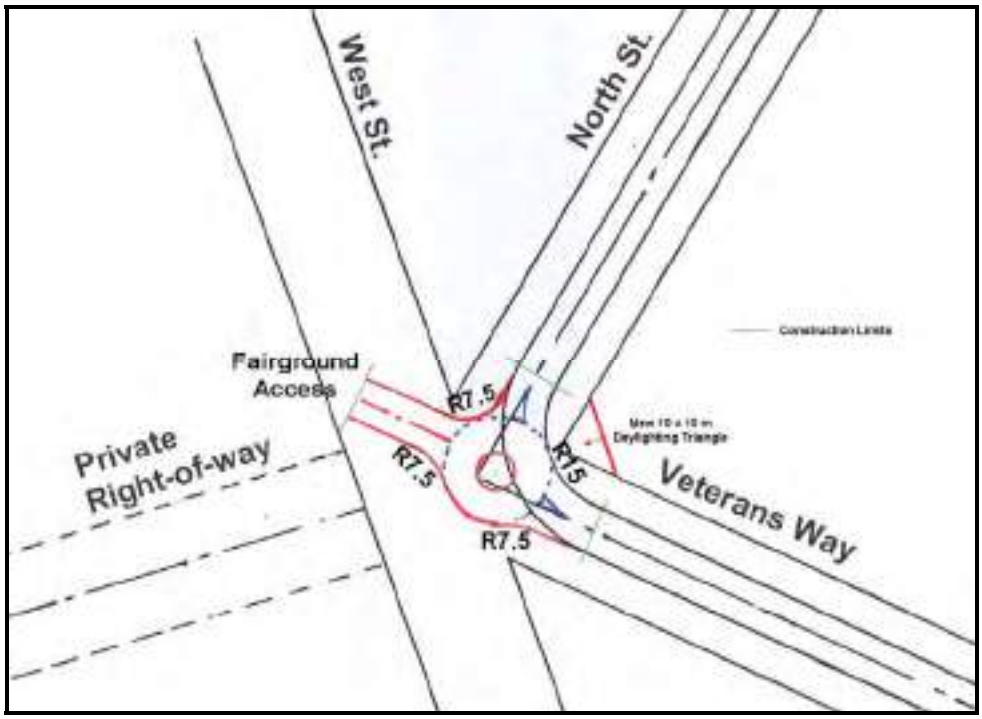

Figure 5.4 – Roundabout Functional Plan (not to scale)

5.8.5 Comparisons of Control Configurations

Table A7 presents the delays per movement and the total delays (in seconds) for all three configurations, all three peak hours and all three time horizons.

The all-way stop control configuration has total delays about 50% higher than the single stop control configuration except for the Saturday outbound peak hour, when the total delays are slightly less.

The roundabout total delays are about ½ to ⅓ of the both stop control configurations. A similar relationship exists for volume/capacity ratios shown in Tables 5.9, 5.10 & 5.11.

A simple evaluation matrix was devised, as shown in Table 5.12.

Table 5.12 - Intersection Configuration Evaluation			
Alternative	One-Way Stop	All-Way Stop	Roundabout
Total 2020 Delay	vehicle hours/hour		
Weekday Peak Hour	1.63	1.86	0.62
Saturday Inbound Peak Hour	1.95	2.66	1.14
Saturday Outbound Peak Hour	6.67	6.21	1.88
Average 2020 Delay/Vehicle	seconds/vehicle		
Weekday Peak Hour	8.89	10.14	3.40
Saturday Inbound Peak Hour	2.52	3.43	1.47
Saturday Outbound Peak Hour	26.04	24.23	7.35
2020 Levels of Service			
Weekday Peak Hour	A	B	A
Saturday Inbound Peak Hour	A	A	A
Saturday Outbound Peak Hour	D	C	A
Stop Levels	One Approach Stops	All Approaches Stop	All Approaches Yield
Total Yearly Delay Costs[4][5]	$60,790	$69,354	$23,231
Construction Costs	$500	$1,000	$60,000
Additional ROW Requirements	No	No	No
Flexibility to Serve Variable Volumes	Lowest	Medium	Best

The roundabout alternative has the lowest delays, the best levels of service and requires the fewest number of vehicles to stop at the intersection. It also permits the most flexibility to serve the expected wide variance in demands at the intersection. However, it does have the highest cost, since it will require some road construction to implement. The other two options just require signage. The delay cost savings/year from installing a roundabout over either of the other two alternatives outweigh the implementation cost of the roundabout. The cost of the roundabout would be returned in about 2 years.

Therefore, a small roundabout would provide the best overall operations for this intersection.

[4] Minimum wage = $10.25/hour

[5] Based on weekday peak hour volumes entering the intersection x 365 days x average vehicle delay x minimum wage

5.9 Other Improvements

One of the constraints to providing good traffic flow into and out of the downtown area is the bridges over the river and the canal. Ideally they should be widened to provide at least four lanes and sidewalks both sides. However, the cost to do so is extremely high and the actual construction would likely involve temporary bridges to maintain at least two lanes in each direction.

Another road improvement that should be reviewed is the provision of a left turn lane on Helen Street at North Street. The lane is not required to provide capacity, but its construction would provide room for vehicles turning left onto North Street to wait for gaps in the eastbound traffic.

There have questions raised regarding the need for the unopened West Street right-of-way between Lindsay Street and North Street, since if it is not needed, the Legion would like to have access to the lands to provide for additional parking. The above analysis indicates that the right-of-way is not needed to provide additional road capacity in the area. There may be a need to retain the right-of-way if there are underground services in the right-of-way.

There is a 20 metre wide strip of property ('right-of-way') leading from the North Street/Veterans Way intersection westerly to the large property to the west. It has been proposed by the Wright property developer that the necessary length of the right-of-way be obtained by the City and converted to a public road. However, this would require:

a. the owner of the 'right-of-way' to proposed to developed the 'right-of-way' as a public road,

b. someone other than the City purchasing the 'right-of-way' and then dedicating the lands as a public road, or

c. the City purchasing the 'right-of-way' and then dedicating the lands as a public road.

A 100 metre length of the 'right-of-way' could cost in the range of $20,000[6] to purchase. Construction costs, at $1,500 per metres, would be in the order of $150,000.

Since the right-of-way is not required at this time, it is possible for the City to wait for a developer to provide the lands and the roadway.

[6] At $100,000/Ha

6. CONCLUSIONS AND RECOMMENDATIONS

6.1 Conclusions

The following conclusions were drawn from the above:

1. The traffic volumes in the downtown area of Fenelon Falls are relatively consistent during the late morning to late afternoon during weekdays and Saturdays. The traffic volume levels on weekdays and Saturdays are also relatively consistent. That is, the peak hours and periods on summer days have similar traffic volumes.

2. There are two levels of usage that can be foreseen for the proposed area. The typical level would involve a sporting event, such as a hockey game, where the proposed 400 seats would be full. Typically this would happen in the evenings, but could occur during a Saturday afternoon.

3. Major events, such as a music concert, would occur much less frequently but would impose significant traffic demands on the capacity of the road system.

4. Fortunately, the existing road system generally has or can have sufficient capacity to serve these high demands.

5. Intersections where improvements may be required include:

    a. Colborne Street & Francis Street,

    b. Colborne Street/Lindsay Street & Helen Street, and

    c. Lindsay Street & Veterans Way

6. The improvements to the Colborne Street & Francis Street intersection include converting the two eastbound lanes to a combined left turn and through lane and a right turn only lane.

7. Improvements to the Colborne Street/Lindsay Street & Helen Street intersection include adding advanced green phases for the eastbound-to-northbound left turns and for the southbound-to-eastbound left turns.

8. Ideally, the southbound turning lanes at the Colborne Street/Lindsay Street & Helen Street intersection should be extended north, but this cannot be done since the bridge over the river controls the length of roadway available for such improvements.

9. A major event at the arena will place demands on the Lindsay Street & Veterans Way intersection that will exceed the capacity of the intersection. The intersection should be signalized to serve these demands.

10. An alternate solution would be to provide police control at the intersection during major events.

11. Of the three alternative traffic control configurations considered for the North Street/Veterans Way & fair grounds access intersection, a roundabout would provide the best level of service than would a single stop control or all-way stop control. A roundabout also has the flexibility to serve different levels of demands on the various approaches.

12. The unopened West Street right-of-way between Lindsay Street and North Street is not needed to provide additional capacity in the road system.

6.2 Recommendations

The recommendations drawn from the above are:

5. The two eastbound lanes at the Colborne Street & Francis Street should be converted to a combined left turn and through lane and a right turn only lane.

6. Advanced green phases should be implemented for the eastbound-to-northbound left turns and for the southbound-to-eastbound left turns at Colborne Street/Lindsay Street & Helen Street intersection.

7. The installation of fully-actuated traffic control signals at the Lindsay Street & Veterans Way intersection should be considered.

8. The North Street/Veterans Way & fair grounds access intersection should be reconstructed as a roundabout as part of the improvements associated with the construction of the arena and community centre.

Respectfully submitted

February 9, 2010

Mark Engineering

Tables

Hwy 35 SADTs

Location Cambray Road to Powles Corners

Year	SADT	Forecast SADT
1988	7700	7700
1989	8300	8300
1990	8800	8800
1991	9000	9000
1992	8700	8700
1993	8300	8300
1994	9550	9550
1995	9750	9750
1996	9900	9900
1997	10400	10400
1998	10600	10600
1999	10800	10800
2000	11000	11000
2001	11200	11200
2002	11600	11600
2003	11700	11700
2004	11700	11700
2005	10500	10500
2006		10722
2007		10945
2008		11167
2009		11390
2010		11612
2011		11835
2012		12057
2013		12280
2014		12502
2015		12725
2016		12947
2017		13170
2018		13392
2019		13615
2020		13837

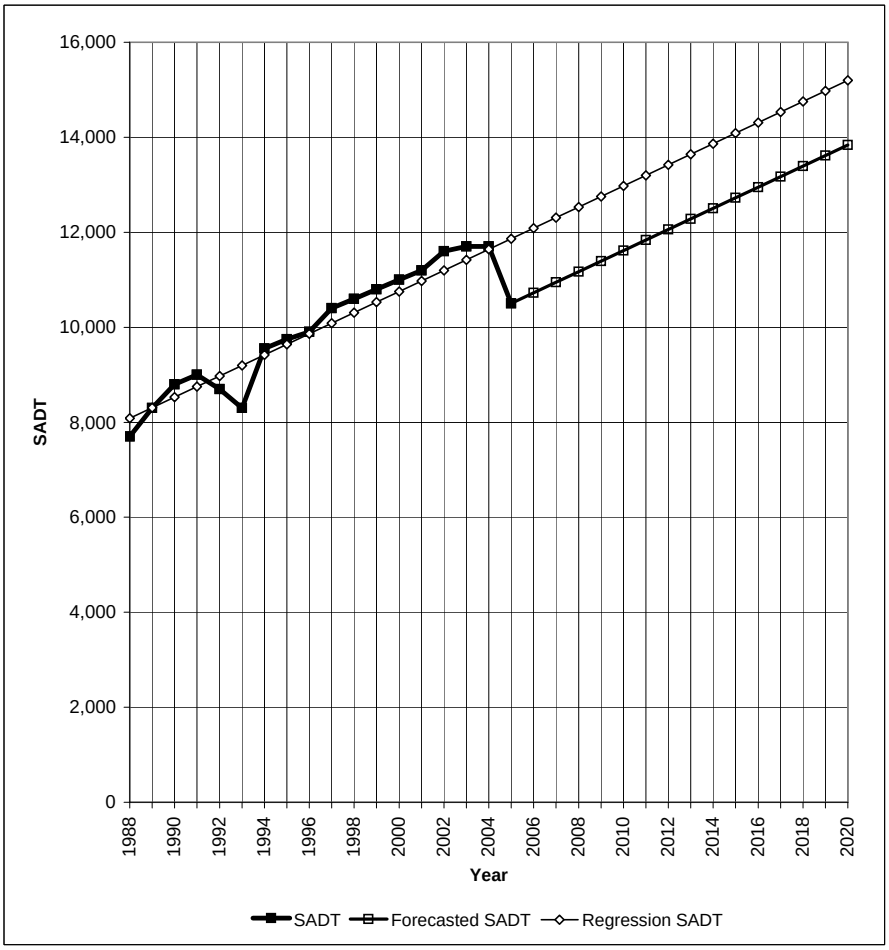

Growth Factors	Factor	Annual %
2009 to 2010	1.0195	2.0%
2009 to 2015	1.1172	1.9%
2009 to 2020	1.2149	1.8%

SUMMARY OUTPUT

Regression Statistics	
Multiple R	0.9314
R Square	0.8674
Adjusted R Square	0.8591
Standard Error	478.6628
Observations	18

ANOVA

	df	*SS*	*MS*	*F*	*Significance F*
Regression	1	23985221.88	23985221.88	104.6849825	1.9957E-08
Residual	16	3665889.233	229118.0771		
Total	17	27651111.11			

	Coefficients	*Standard Error*	*t Stat*	*P-value*	*Lower 95%*	*Upper 95%*	*Lower 95.0%*	*Upper 95.0%*
Intercept	-434243.8768	43416.37583	-10.00184535	2.73981E-08	-526282.4814	-342205.2723	-526282.4814	-342205.2723
X Variable 1	222.49742	21.74617042	10.23156794	1.9957E-08	176.3975984	268.5972416	176.3975984	268.5972416

Hwy 35 SAWDTs

Location Cambray Road to Powles Corners

Year	SAWDT	Forecast SAWDT
1988	7200	7200
1989	7700	7700
1990	7700	7700
1991	7900	7900
1992	7800	7800
1993	6300	6300
1994	8550	8550
1995	8700	8700
1996	8750	8750
1997	9200	9200
1998	9400	9400
1999	9600	9600
2000	9800	9800
2001	9950	9950
2002	10300	10300
2003	10400	10400
2004	10400	10400
2005	10000	10000
2006		10208
2007		10415
2008		10623
2009		10831
2010		11038
2011		11246
2012		11454
2013		11662
2014		11869
2015		12077
2016		12285
2017		12492
2018		12700
2019		12908
2020		13115

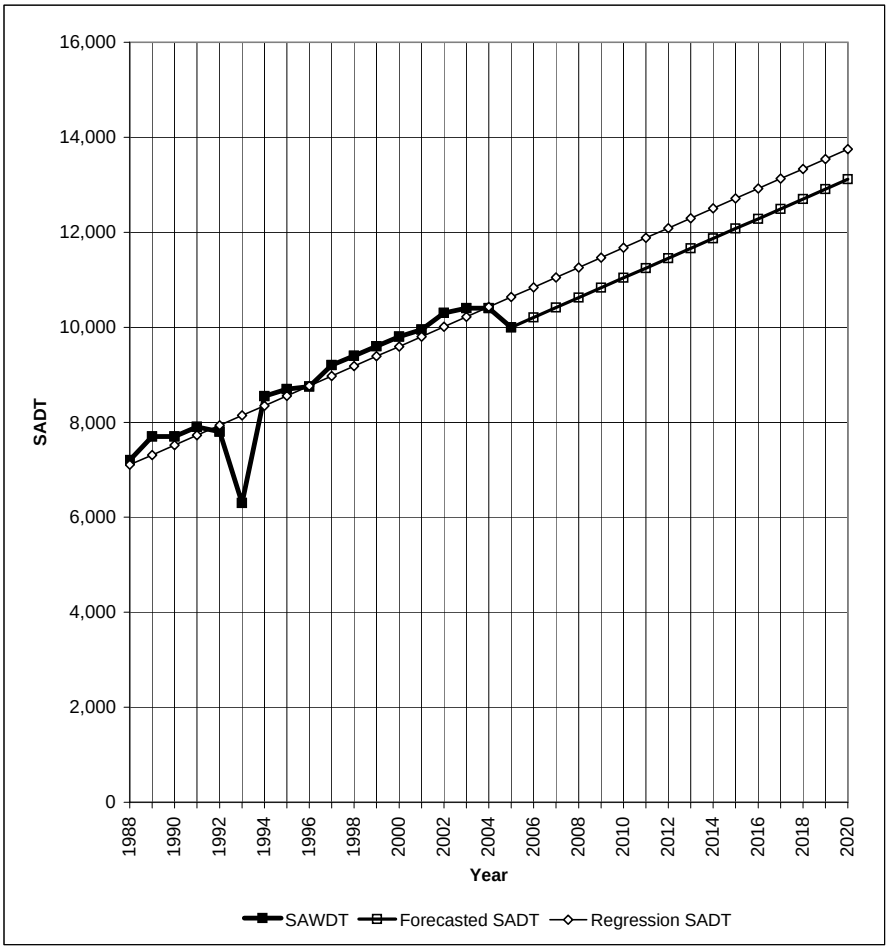

Growth Factors	Factor	Annual %
2009 to 2010	1.019	1.9%
2009 to 2015	1.115	1.8%
2009 to 2020	1.211	1.8%

SUMMARY OUTPUT

Regression Statistics	
Multiple R	0.9085
R Square	0.8254
Adjusted R Square	0.8144
Standard Error	525.7171
Observations	18

ANOVA

	df	*SS*	*MS*	*F*	*Significance F*
Regression	1	20898639.06	20898639.06	75.61601924	1.84921E-07
Residual	16	4422055.384	276378.4615		
Total	17	25320694.44			

	Coefficients	*Standard Error*	*t Stat*	*P-value*	*Lower 95%*	*Upper 95%*	*Lower 95.0%*	*Upper 95.0%*
Intercept	-405780.3234	47684.36324	-8.509714627	2.46602E-07	-506866.657	-304693.9897	-506866.657	-304693.9897
X Variable 1	207.6883385	23.88389794	8.695747193	1.84921E-07	157.056737	258.31994	157.056737	258.31994

Arena Trip Generation

	Arena Statistics		Sports Event
1		**400**	seats
2		133	parking spaces

	Maximum Event Assumptions		
3	Average vehicle occupancy	3	per vehicle
4	Modal split	1%	by bus
5		1%	walking
6		98%	vehicle
7	Arrival in one hour prior to event start	55%	
8	Departure in one hour after event end	80%	
	Source: Fuss & O'Neill Inc., "Traffic Impact Report for the Stadium at Rentschler Field", 200(		
9	Passengers per bus	40	
10	Percentage Drop-offs	12%	of exiting vehicles during hour after event ends
	Source: Sharon Arena Count		
	Maximum Event Trip Generation		
	Number of vehicles		
11	Buses	=(1) x (4) / (9)	0 buses
12	Private vehicles	=(1) x (6) /(3)	131 vehicles
13	Total	=(11) + (12)	131 vehicles
	Hour Before Start of the Event		
14	Volume Arriving in Hour Before Event Start	=(13) x (7)	72 vph inbound
15	Drop-Offs	=(10) x (14)	9 vph inbound and outbound
16	**Total Inbound Volume**	=(14) + (15)	**81 vph**
17	**Total Outbound Volume**	=(15)	**9 vph**
	Hour After End of the Event		
18	Volume Departing in Hour After Event End	=(13) x (8)	105 vph outbound
19	Pick-Ups	=(15)	9 vph inbound and outbound
20	**Total Inbound Volume**	=(19)	**9 vph**
21	**Total Outbound Volume**	=(16) + (17)	**114 vph**

	Arena Statistics		Concert
	Ice Area ≈ 61m x 30m =	1830	s.m.
	Stage & Access Coverage =	50%	
	Seat Width =	0.60	Pitch = 1.00
	Area /seat =	0.60	s.m.
	Seats on the floor =	1525	seats
	Seats in the stands =	200	Seats that can see the stage
1		**1725**	seats
2		575	parking spaces
	Maximum Event Assumptions		
3	Average vehicle occupancy	3	per vehicle
4	Modal split	5%	by bus
5		1%	walking
6		94%	vehicle
7	Arrival in one hour prior to event start	55%	
8	Departure in one hour after event end	80%	
9	Passengers per bus	40	
10	Percentage Drop-offs	12%	of exiting vehicles during hour after event ends
	Maximum Event Trip Generation		
	Number of vehicles		
11	Buses	=(1) x (4) / (9)	2 buses
12	Private vehicles	=(1) x (6) /(3)	541 vehicles
13	Total	=(11) + (12)	543 vehicles
	Hour Before Start of the Event		
14	Volume Arriving in Hour Before Event Start	=(13) x (7)	299 vph inbound
15	Drop-Offs	=(10) x (14)	36 vph inbound and outbound
16	**Total Inbound Volume**	=(14) + (15)	**335 vph**
17	**Total Outbound Volume**	=(15)	**36 vph**
	Hour After End of the Event		
18	Volume Departing in Hour After Event End	=(13) x (8)	434 vph outbound
19	Pick-Ups	=(15)	36 vph inbound and outbound
20	**Total Inbound Volume**	=(19)	**36 vph**
21	**Total Outbound Volume**	=(16) + (17)	**470 vph**

Community Centre Trip Gen.

	Community Centre Statistics			
1			**300**	people
2			100	parking spaces

	Maximum Event Assumptions			
3	Average vehicle occupancy		3	per vehicle
4	Modal split		4%	by bus and/or taxi
5			1%	walking
6			95%	vehicle
7	Arrival in one hour prior to event start		55%	
8	Departure in one hour after event end		80%	
9	Passengers per bus		40	
10	Percentage Drop-offs		10%	of exiting vehicles during hour after event ends
	Maximum Event Trip Generation			
	Number of vehicles			
11		Buses	=(1) x (4) / (9)	0 buses
12		Private vehicles	=(1) x (6) /(3)	95 vehicles
13		Total	=(11) + (12)	95 vehicles
	Hour Before Start of the Event			
14	Volume Arriving in Hour Before Event Start		=(13) x (7)	52 vph inbound
15	Drop-Offs		=(10) x (14)	5 vph inbound and outbound
16	**Total Inbound Volume**		=(14) + (15)	**57 vph**
17	**Total Outbound Volume**		=(15)	**5 vph**
	Hour After End of the Event			
18	Volume Departing in Hour After Event End		=(13) x (8)	76 vph outbound
19	Pick-Ups		=(15)	5 vph inbound and outbound
20	**Total Inbound Volume**		=(19)	**5 vph**
21	**Total Outbound Volume**		=(16) + (17)	**81 vph**

Other Trip Generation

Development						
Townhouses	ITE Code 230					
Size	12 Units					
	Rates			Trips		
Direction	Inbound	Outbound	Total	Inbound	Outbound	Total
	Trips/person			Trips/hour		
Weekday Peak Hour	0.35	0.17	0.52	4	2	6
Saturday Peak Hour	0.23	0.19	0.42	3	2	5

Wright Development						
Residential						
Single Family Units	ITE Code 210					
Size	150 Units					
	Rates			Trips		
Direction	Inbound	Outbound	Total	Inbound	Outbound	Total
	Trips/unit			Trips/hour		
Weekday Peak Hour	0.64	0.37	1.01	95	56	151
Saturday Peak Hour	0.49	0.44	0.93	74	66	140
Commercial						
Shopping Centre						
Site Area	1.88 Ha 4.64 Acres			Coverage 20%		
Size	40,455 sf					
	Rates			Trips		
Direction	Inbound	Outbound	Total	Inbound	Outbound	Total
	Trips/ksf			Trips/hour		
Weekday Peak Hour	1.83	1.90	3.73	74	77	151
Saturday Peak Hour	2.54	2.35	4.89	103	95	198

High School						
High School	ITE Code 530					
Size	985 Students					
	Rates			Trips		
Direction	Inbound	Outbound	Total	Inbound	Outbound	Total
	Trips/student			Trips/hour		
Weekday Peak Hour	0.10	0.19	0.29	94	191	285
Saturday Peak Hour	0.07	0.04	0.11	69	39	108

Trip Distribution

Non-Commercial/Retail						
Peak Hour	Weekday			Saturday		
	Volume	%	Use%	Volume	%	Use%
From						
Northwest on Francis St.	157	13%	15	162	10%	10
North on Colborne St.	329	27%	25	498	32%	30
Northeast on Francis St.	96	8%	10	115	7%	10
Northwest on Water St.	0	0%	0	0	0%	0
Northeast on Oak St.	0	0%	0	1	0%	0
East on West St.	29	2%	5	29	2%	0
South on Lindsay St.	370	31%	30	454	29%	30
West on Helen St.	217	18%	15	308	20%	20
Total	1198	100%	100	1567	100%	100
To						
Northwest on Francis St.	71	6%	5	69	4%	5
North on Colborne St.	400	34%	35	548	35%	35
Northeast on Francis St.	71	6%	5	86	5%	5
Northwest on Water St.	82	7%	5	119	8%	5
Northeast on Oak St.	3	0%	0	3	0%	0
East on West St.	21	2%	5	29	2%	5
South on Lindsay St.	283	24%	25	373	24%	25
West on Helen St.	250	21%	20	351	22%	20
Total	1181	100.0%	100	1578	100%	100

Intersection Delays

Configuration 1 - Single Stop Controlled												
	NB	SB	EB	Overall	NB	SB	EB	Overall	NB	SB	EB	Overall
2010	Weekday				Saturday Inbound				Saturday Outbound			
Volumes	256	140	252	648	383	203	187	773	183	103	619	905
Average Delay	7.9	0.0	14.7	8.8	8.6	0.0	19.0	8.9	7.7	0.0	33.8	24.7
Total Delay	2022.4	0.0	3704.4	5726.8	3293.8	0.0	3553.0	6846.8	1409.1	0.0	20922.2	22331.3
2015					Saturday Inbound							
Volumes	256	143	252	651	387	8415	187	8989	187	106	619	912
Average Delay	7.9	0.0	14.8	8.8	8.6	0.0	19.2	0.8	7.7	0.0	34.7	25.1
Total Delay	2022.4	0.0	3729.6	5752.0	3328.2	0.0	3590.4	6918.6	1439.9	0.0	21479.3	22919.2
2020					Saturday Outbound							
Volumes	264	144	252	660	392	211	187	790	192	111	619	922
Average Delay	7.9	0.0	15.0	8.9	8.6	0.0	19.6	8.9	7.7	0.0	36.4	26.0
Total Delay	2085.6	0.0	3780.0	5865.6	3371.2	0.0	3665.2	7036.4	1478.4	0.0	22531.6	24010.0
Configuration 2 - All-Way Stop Controlled												
	EB	WB	SB	Overall	EB	WB	SB	Overall	EB	WB	SB	Overall
2010	Weekday				Saturday Inbound				Saturday Outbound			
Volumes	252	256	140	648	187	383	203		619	183	103	905
Average Delay	10.4	9.9	9.4	10.0	10.2	13.4	10.3		29.9	9.6	10.0	23.5
Total Delay	2623.3	2539.5	1314.6	6477.4	1913.0	5128.4	2090.9	9132.3	18483.3	1762.3	1029.0	21274.6
2015					Saturday Inbound							
Volumes	252	260	143	655	187	387	206		619	187	106	912
Average Delay	10.5	10.0	9.5	10.0	10.3	13.5	10.4		30.3	9.7	10.1	23.7
Total Delay	2633.4	2597.4	1351.4	6582.2	1920.5	5240.0	2138.3	9298.8	18768.1	1812.0	1067.4	21647.5
2020					Saturday Outbound							
Volumes	252	264	146	662	187	392	211		619	192	111	922
Average Delay	10.5	10.1	9.5	10.1	10.3	13.8	10.6		31.2	9.8	10.2	24.2
Total Delay	2643.5	2658.5	1389.9	6691.9	1933.6	5413.5	2226.1	9573.2	19325.2	1883.5	1134.4	22343.1
Configuration 3 - Roundabout												
	EB	WB	SB	Overall	EB	WB	SB	Overall	EB	WB	SB	Overall
2010	Weekday				Saturday Inbound				Saturday Outbound			
Volumes	252	256	140	648	187	383	203	773	619	183	103	905
Average Delay	4.5	4.6	4.4	4.5	4.0	5.4	5.7	5.1	8.6	4.8	3.9	7.3
Total Delay	1126.4	1169.9	613.2	2909.6	748.0	2052.9	1157.1	3958.0	5292.5	871.1	401.7	6565.2
2015					Saturday Inbound							
Volumes	252	260	143	655	187	387	206	780	619	187	106	912
Average Delay	4.5	4.6	4.4	4.5	4.0	5.4	5.7	5.1	8.6	4.8	3.9	7.3
Total Delay	1129.0	1193.4	629.2	2951.6	749.9	2085.9	1178.3	4014.1	5329.6	895.7	414.5	6639.8
2020					Saturday Outbound							
Volumes	252	264	146	662	187	392	211	790	619	192	111	922
Average Delay	4.5	4.6	4.4	4.5	4.0	5.4	5.8	5.2	8.7	4.8	3.9	7.3
Total Delay	1134.0	1219.7	643.9	2997.5	755.5	2132.5	1219.6	4107.5	5410.1	927.4	436.2	6773.7

Volumes are in vehicles per hour
Average Delay is in seconds per vehicles
Total Delay is in seconds/hour

FIGURE 4.10 TRAFFIC CIRCLE

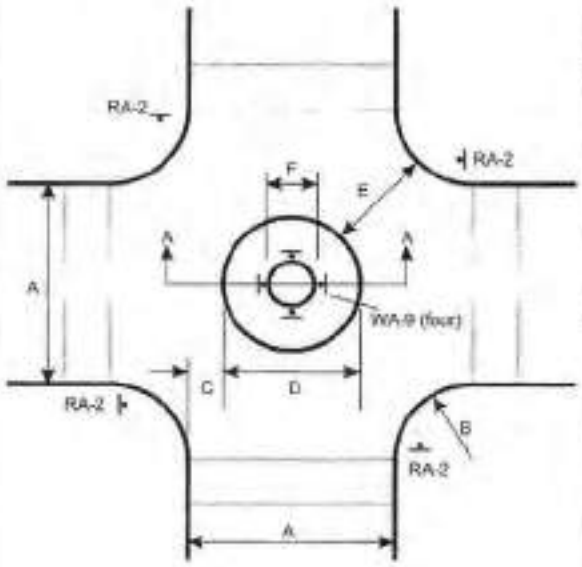

Sign Descriptions:

RA-2	Yield
WA-9	Chevron Alignment

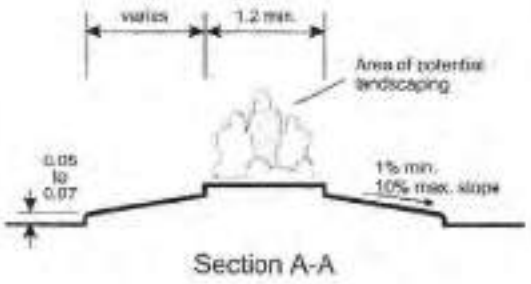

Section A-A

Dimension Chart for Varying Roadway Widths

A Roadway Width	B Curb Return Radius	C Off-Set Distance	D Circle Diameter	E Minimum Opening Width
5.0	4.7	1.7	2.6	4.9
	5.3	1.6	2.8	5.0
	6.9	1.4	3.2	5.5
	8.1	1.2	3.6	5.8
7.0	4.2	1.7	3.8	4.9
	4.8	1.6	3.8	5.0
	6.4	1.4	4.2	5.5
	7.8	1.2	4.6	5.9
8.0	3.7	1.7	4.8	4.9
	4.3	1.6	4.8	5.0
	5.9	1.4	5.2	5.5
	7.3	1.2	5.6	5.9
9.0	3.2	1.7	5.6	4.9
	3.8	1.6	5.8	5.0
	5.4	1.4	6.2	5.5
	6.6	1.2	6.6	5.8
	7.6	1.0	7.0	6.0
10.0	3.0	1.7	6.6	5.0
	3.3	1.6	6.8	5.0
	4.9	1.4	7.2	5.5
	6.1	1.2	7.6	5.8
	6.9	1.0	8.0	5.9
11.0	3.4	1.5	8.0	5.2
	3.6	1.4	8.2	5.2
	5.6	1.2	8.6	5.8
	6.6	1.0	9.0	6.1
12.0	3.0	1.5	9.0	5.2
	3.9	1.4	9.2	5.5
	5.1	1.2	9.6	5.8
	6.3	1.0	10.0	6.1

Legend:

A	Roadway Width
B	Curb Return Radius (3.0 m min)
C	Off-Set Distance (1.7 m max.)
D	Circle Diameter
E	Opening Width (See table above)
F	Raised Island Diameter (1.2 m min.)

- Minimum opening width to be provided to all crosswalks.
- A deflection triangle painted on the pavement on each approach to the traffic circle may be appropriate.

All dimensions are in metres unless otherwise noted.

NOT TO SCALE

Turning Movement Diagrams

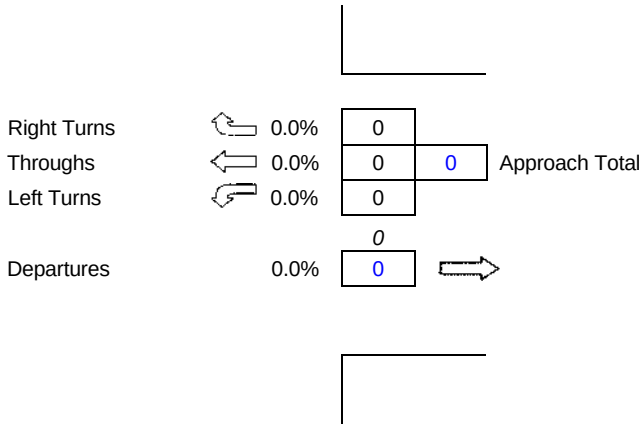

0 = Total Vehicles
0.0% = Percent Heavy Vehicles
0 = Pedestrians

TURNING MOVEMENT LEGEND

2009 Counted Traffic

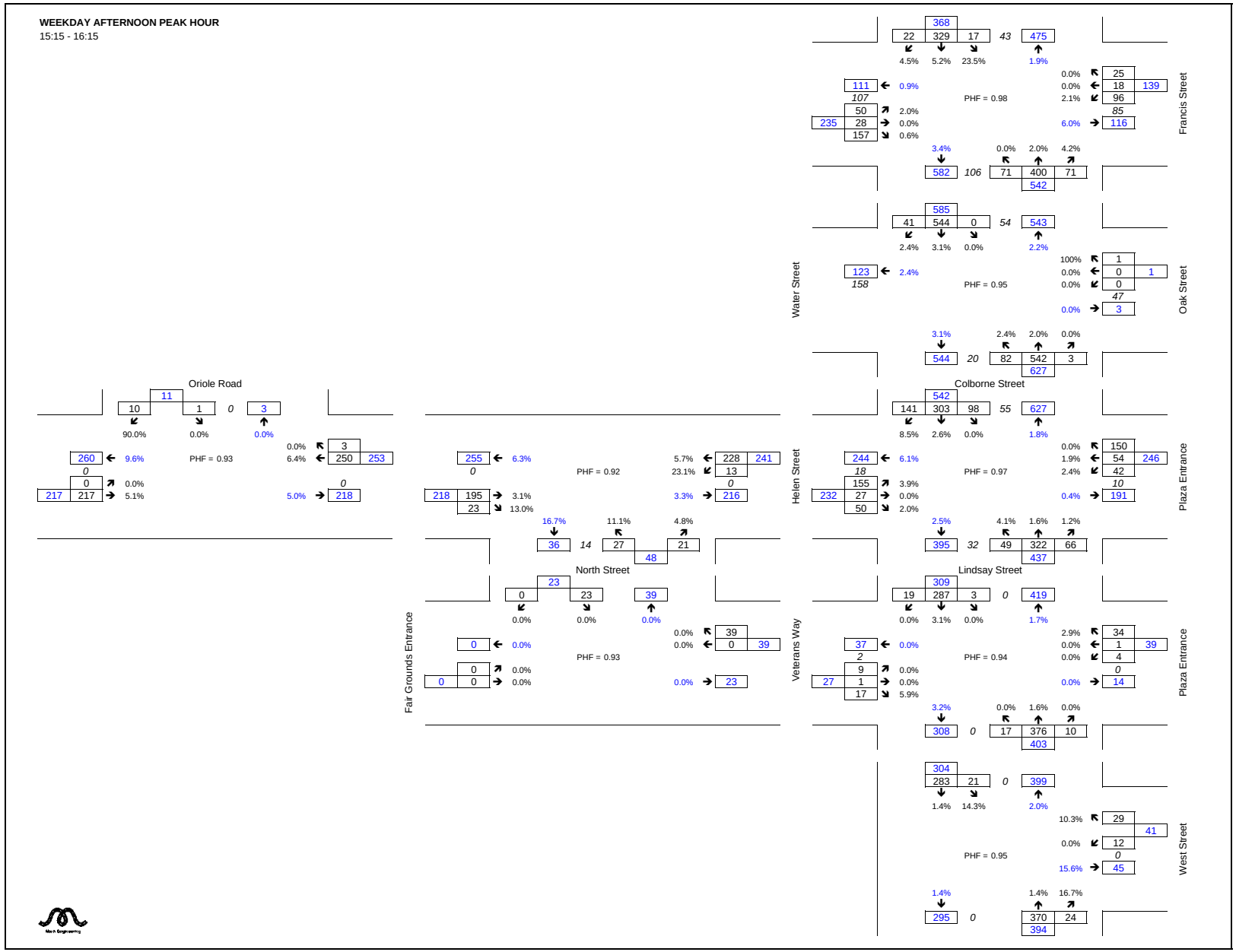

2009 Counted Traffic

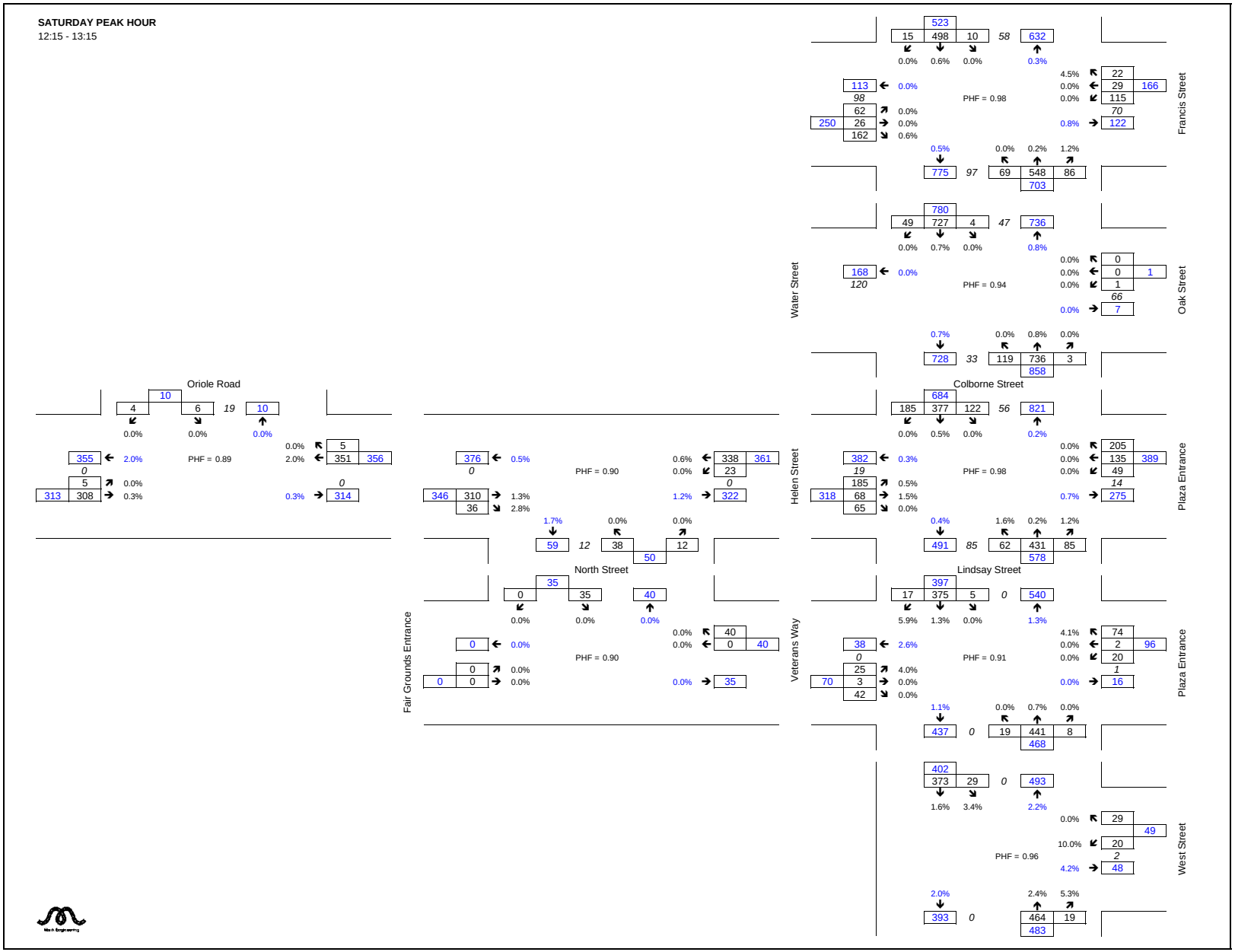

2010 Background Traffic

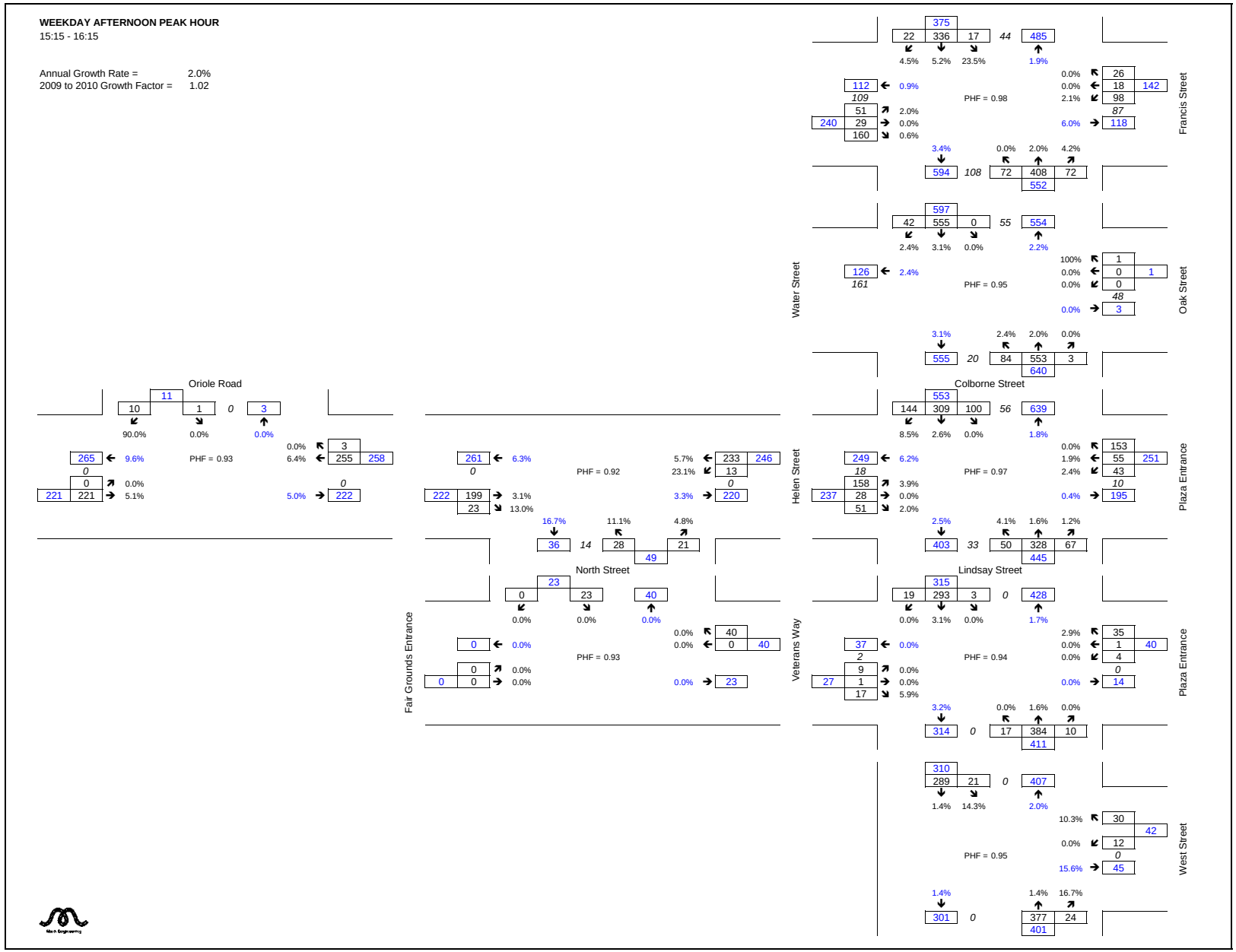

2010 Background Traffic

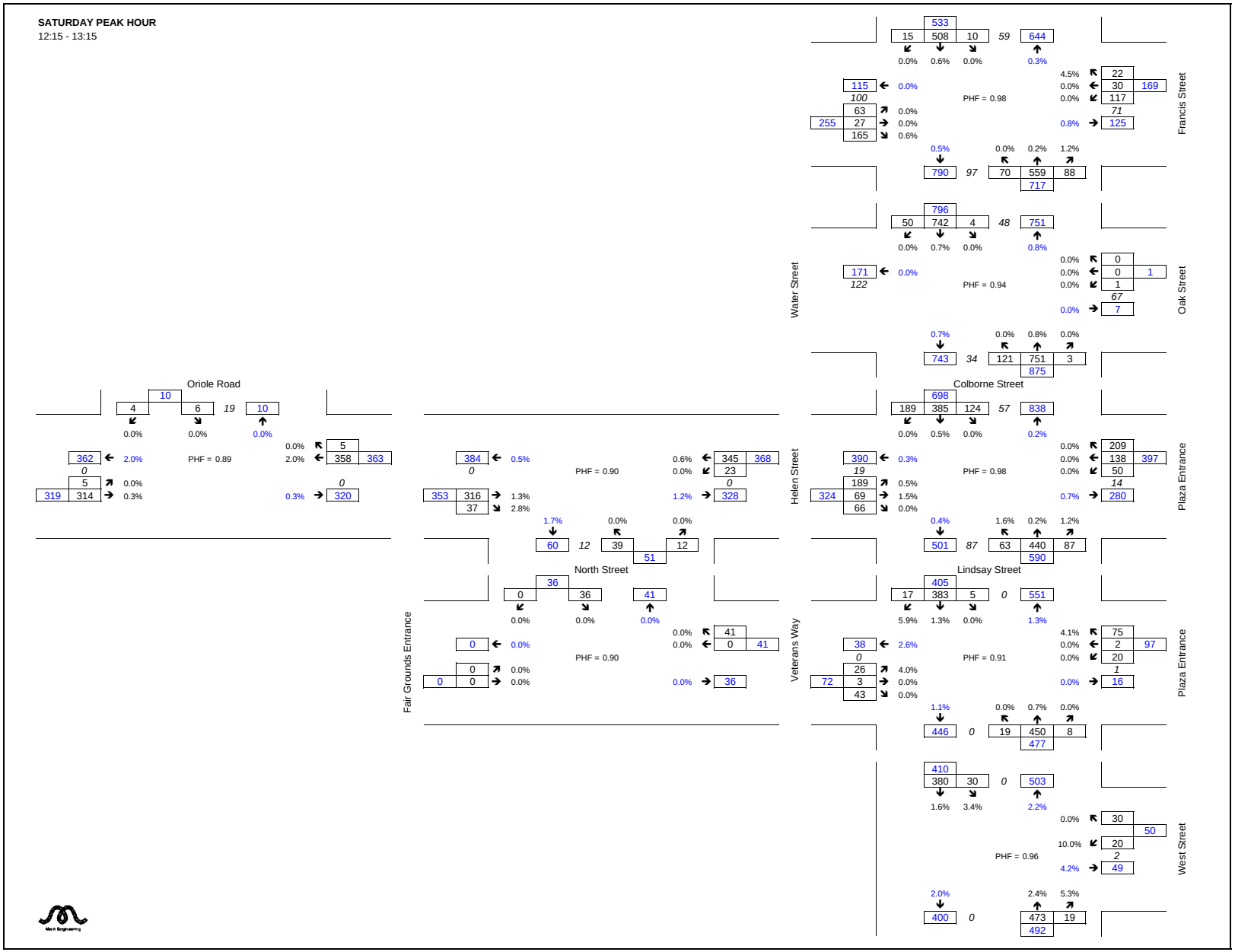

2015 Background Traffic

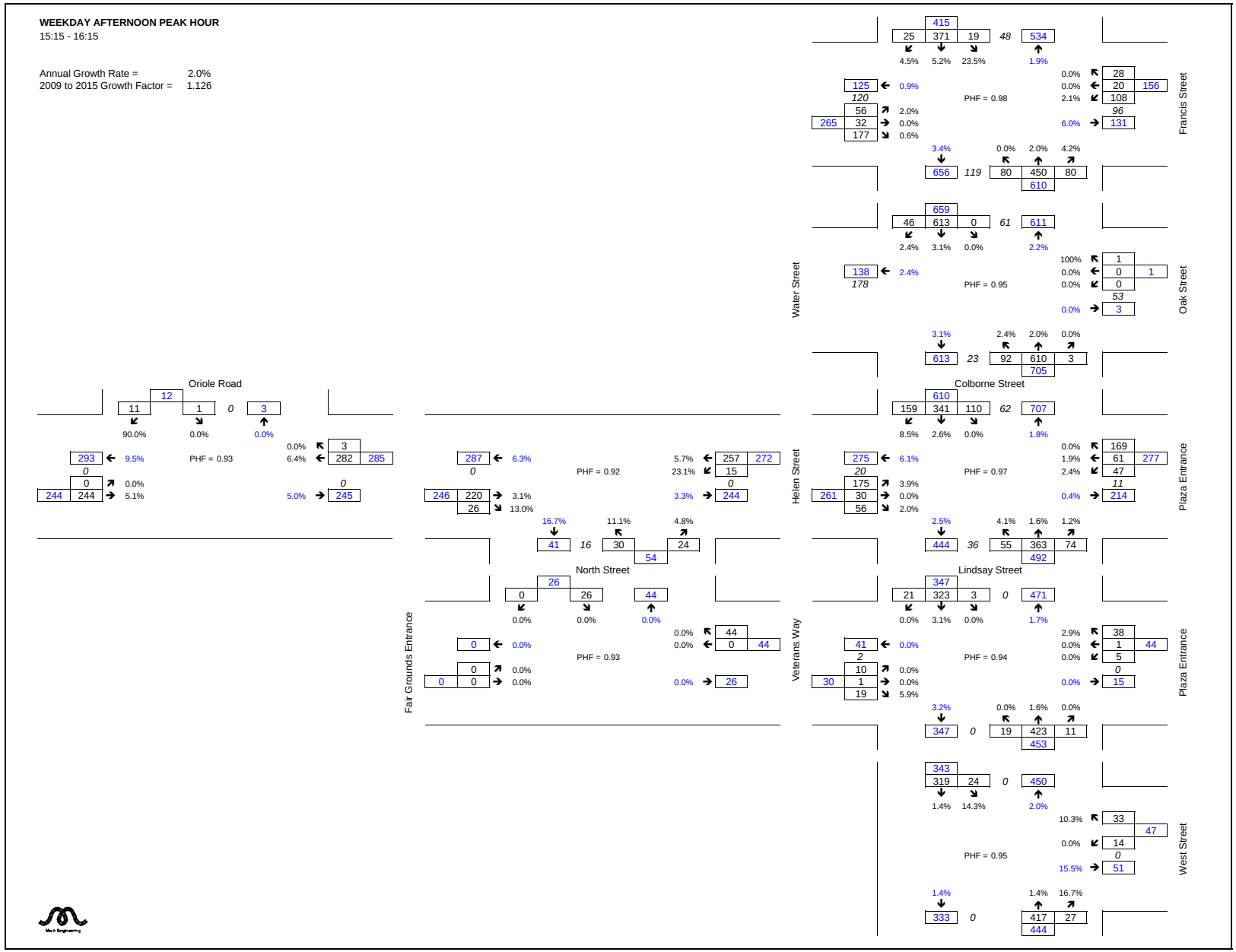

2015 Background Traffic

SATURDAY PEAK HOUR
12:15 - 13:15

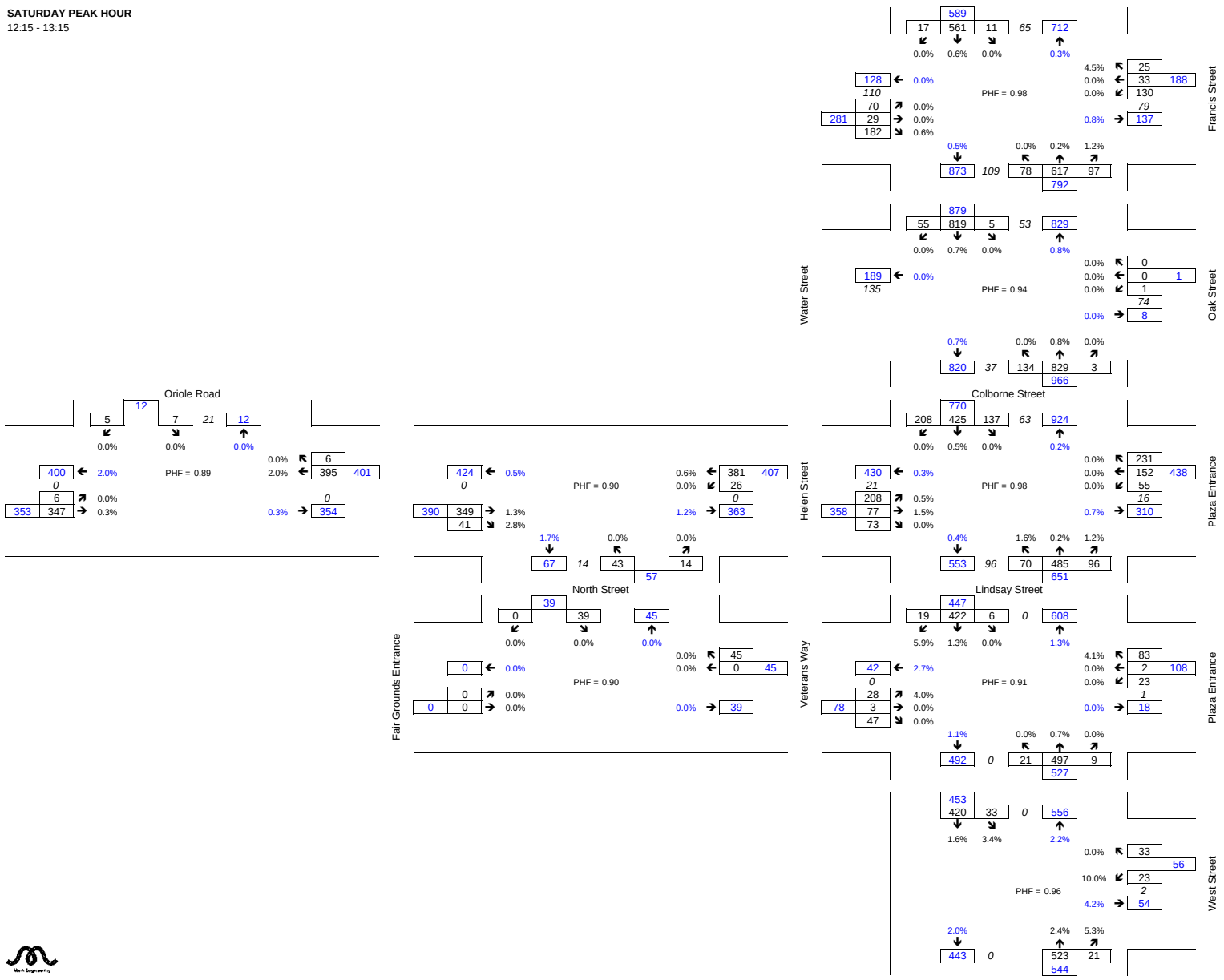

2020 Background Traffic

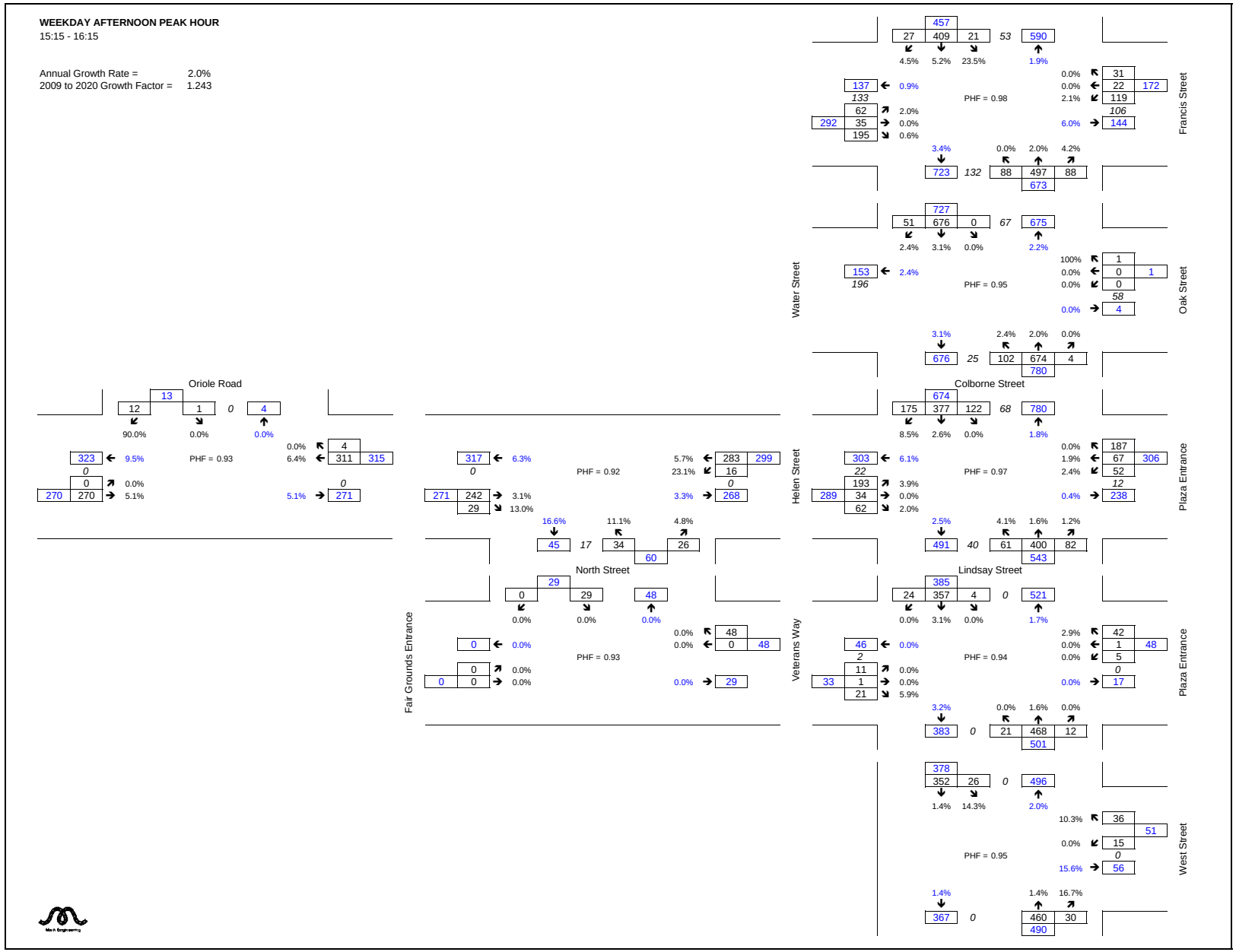

2020 Background Traffic

SATURDAY PEAK HOUR
12:15 - 13:15

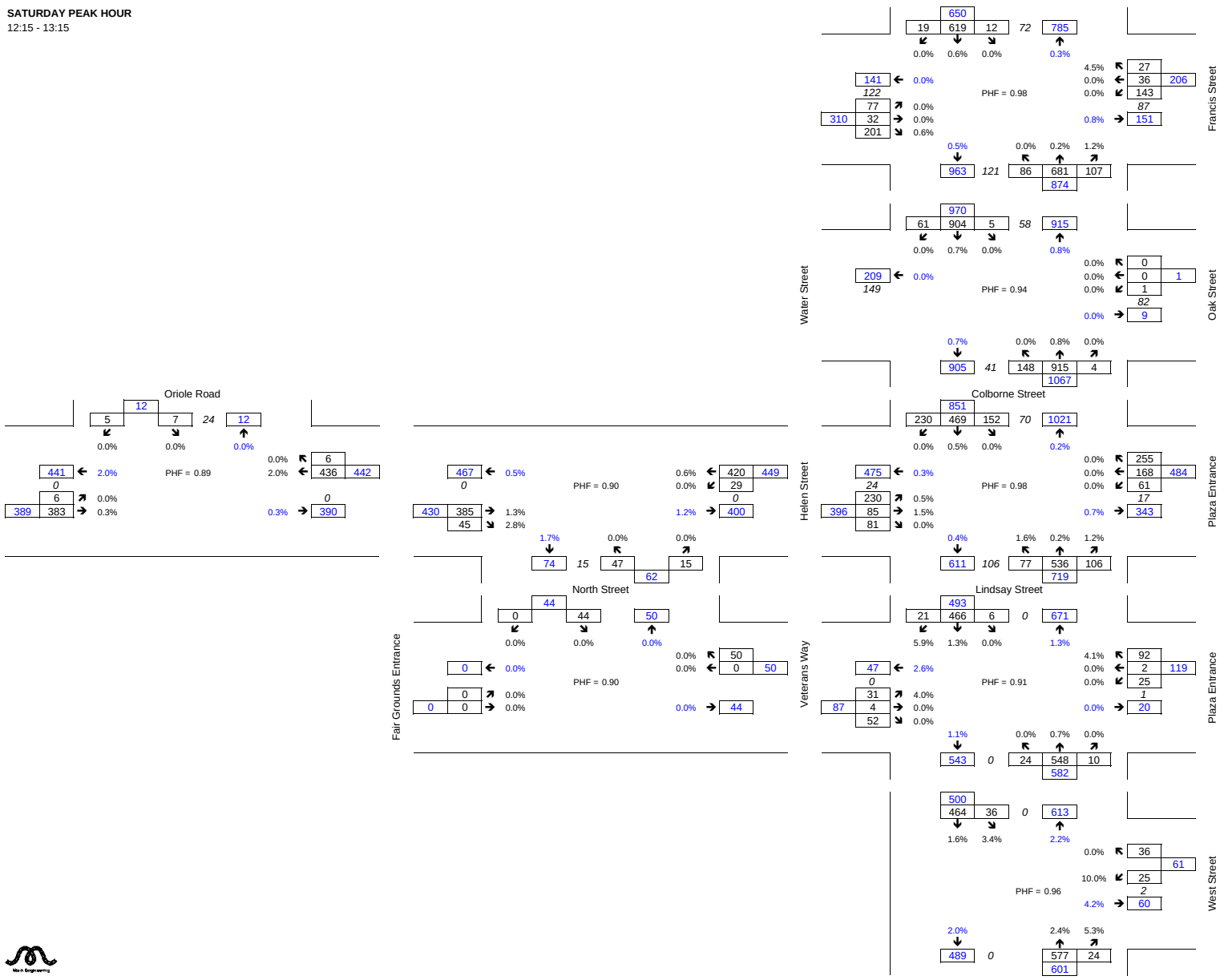

Arena Traffic

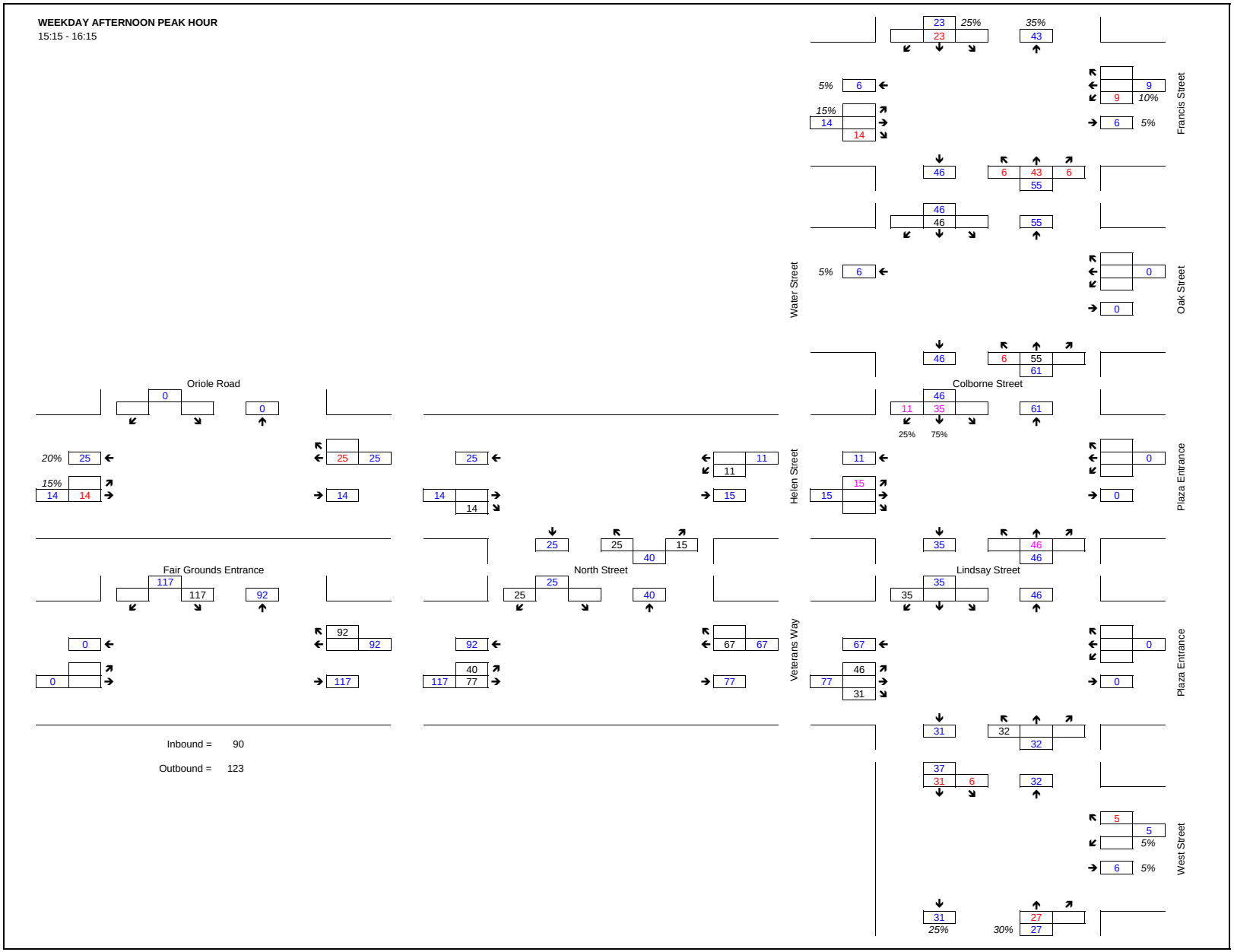

Arena Traffic

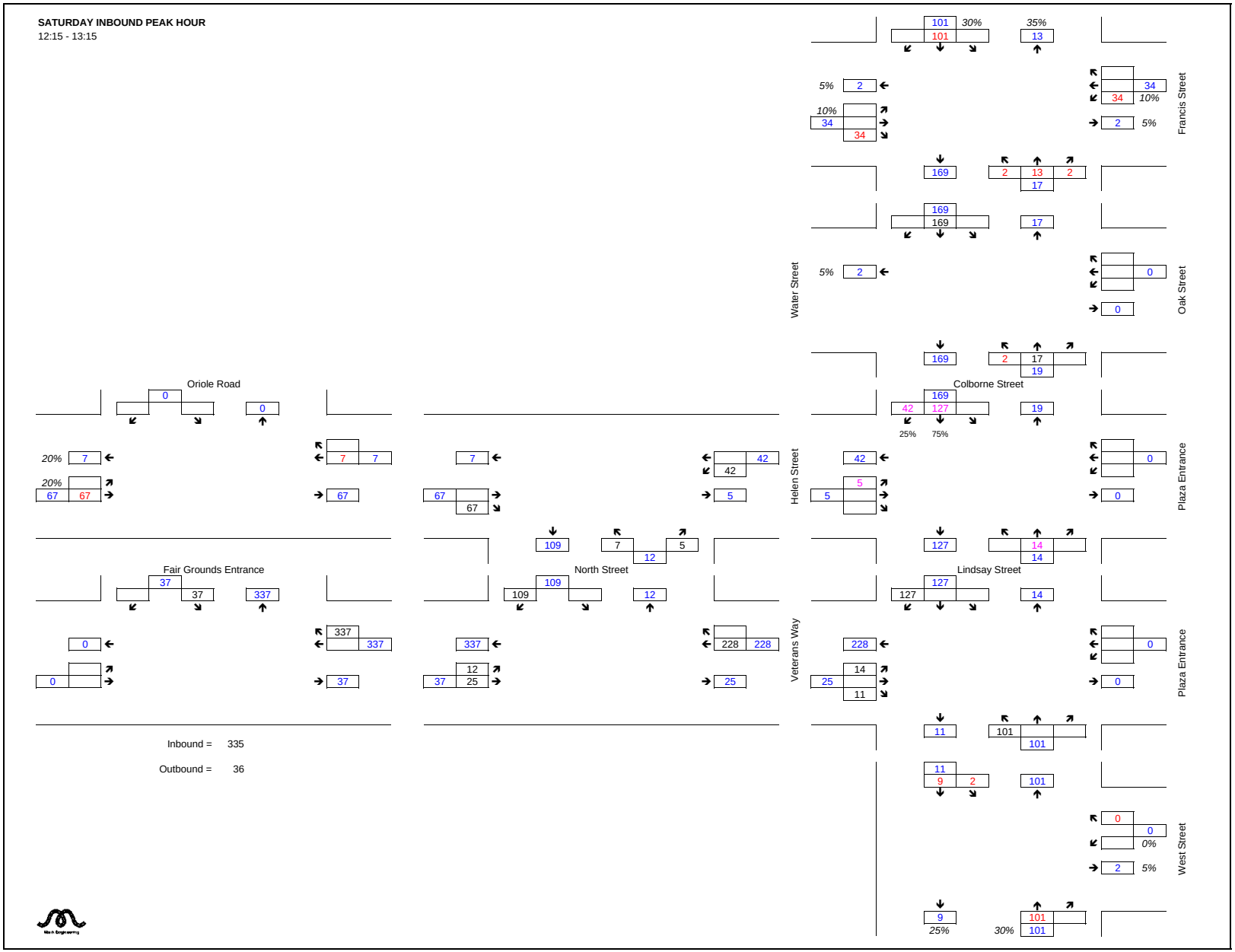

Arena Traffic

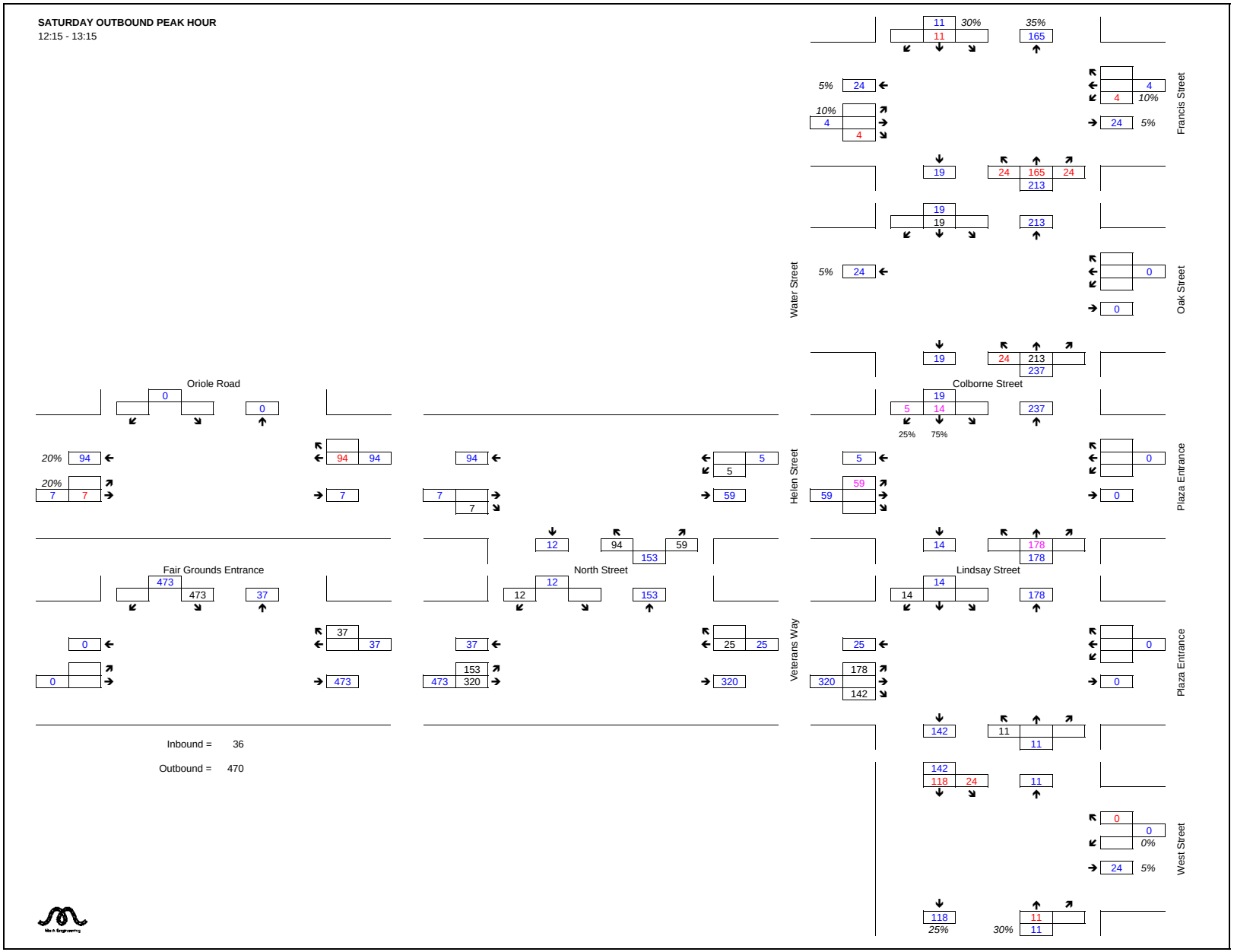

Community Centre Traffic

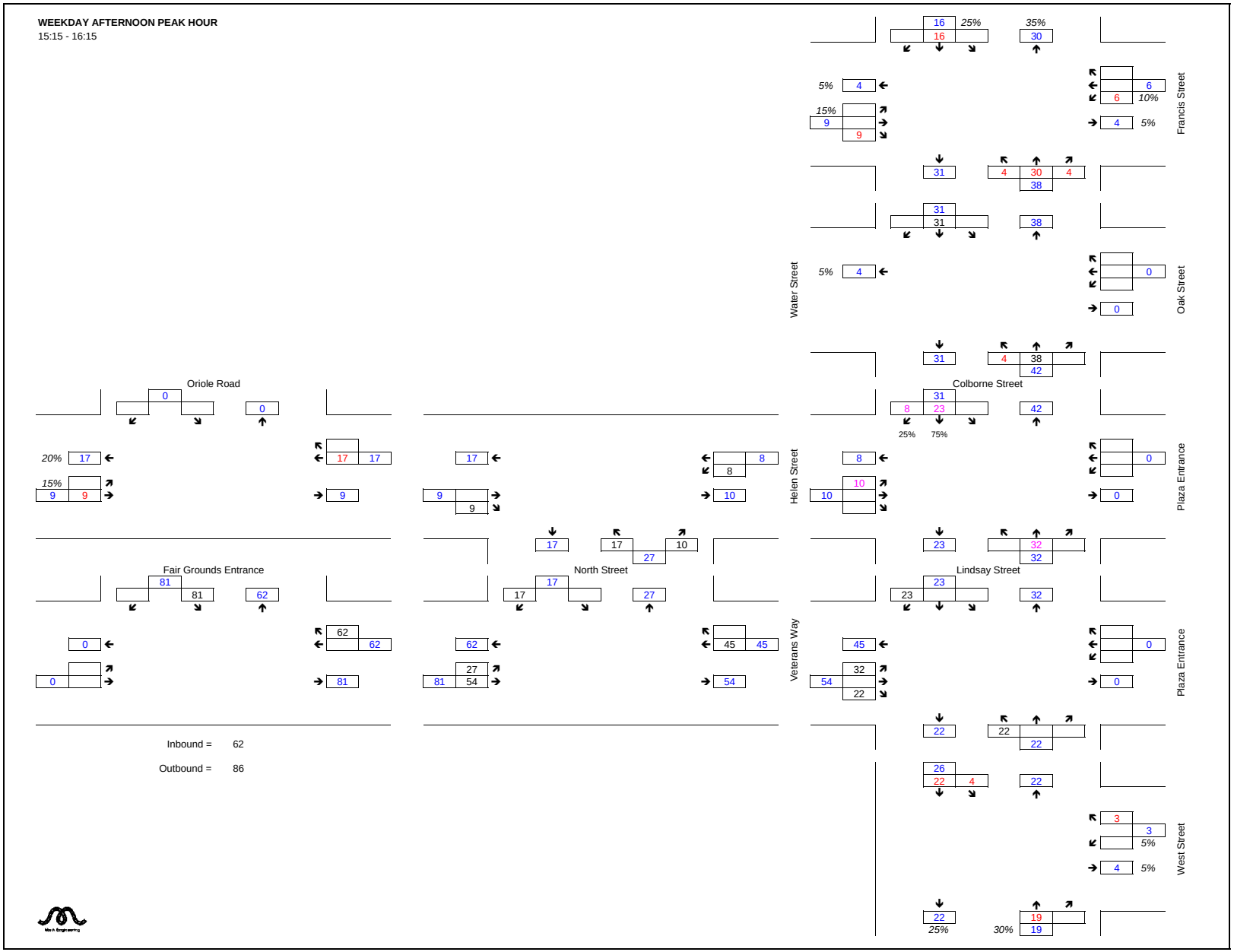

Community Centre Traffic

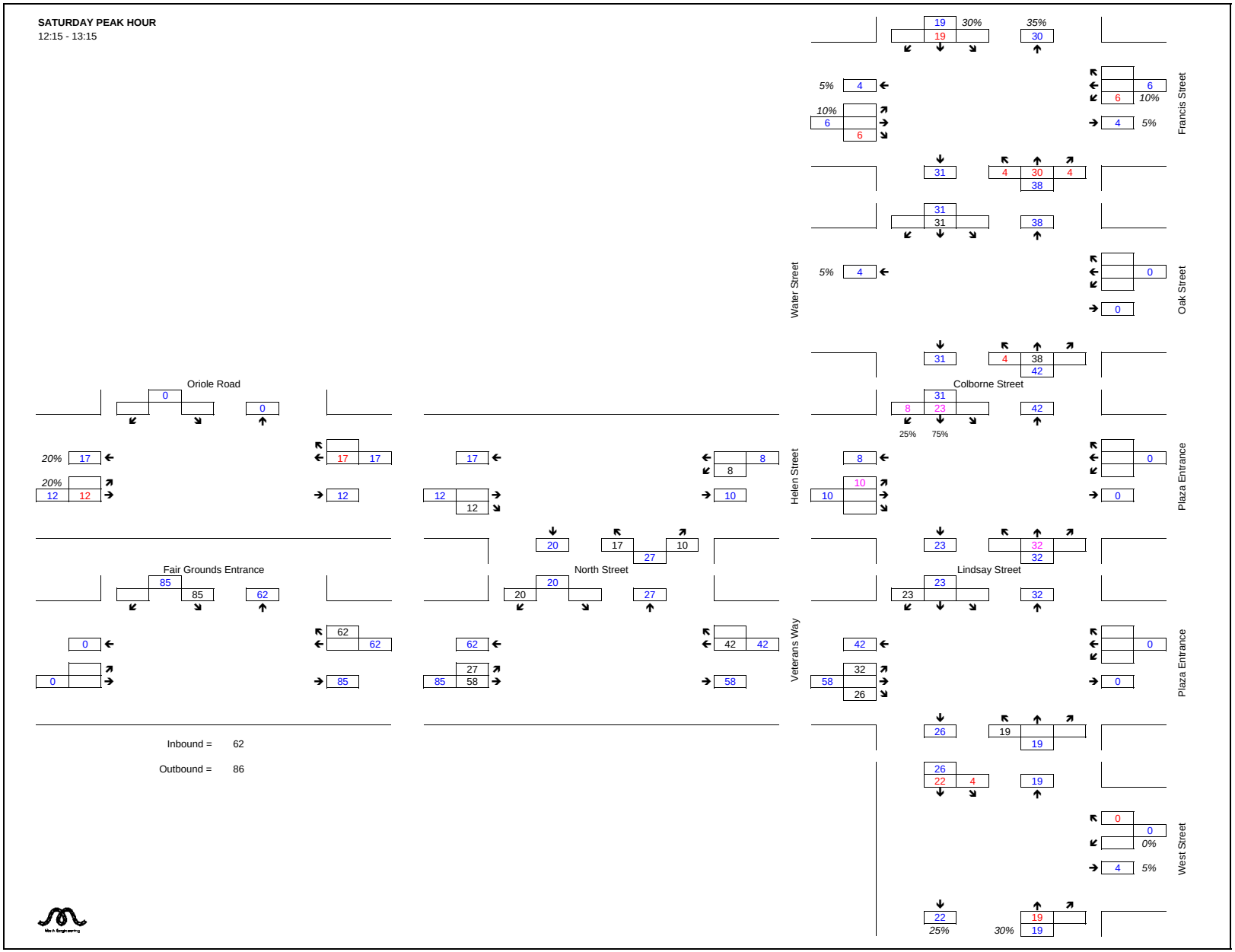

Townhouse Traffic

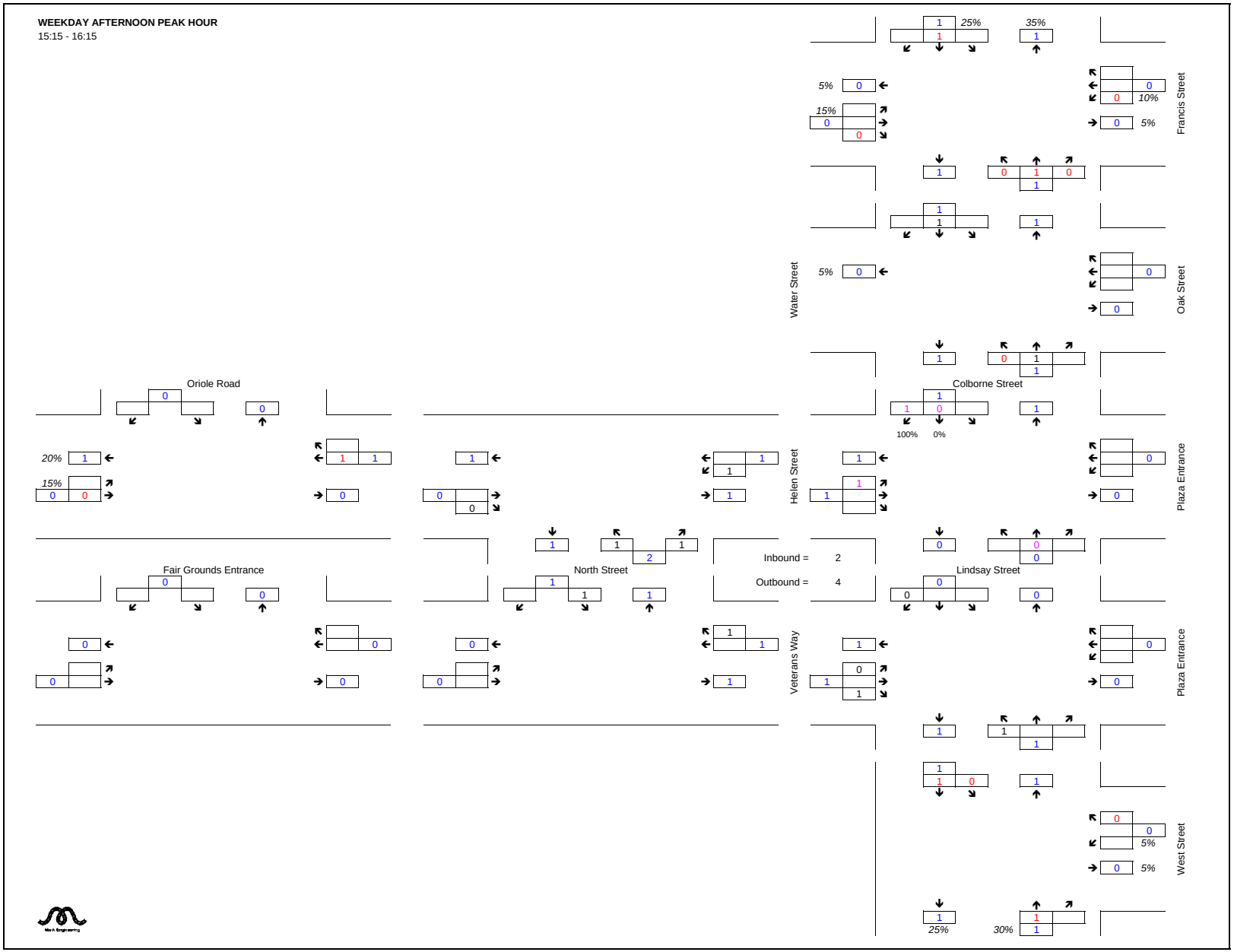

Townhouse Traffic

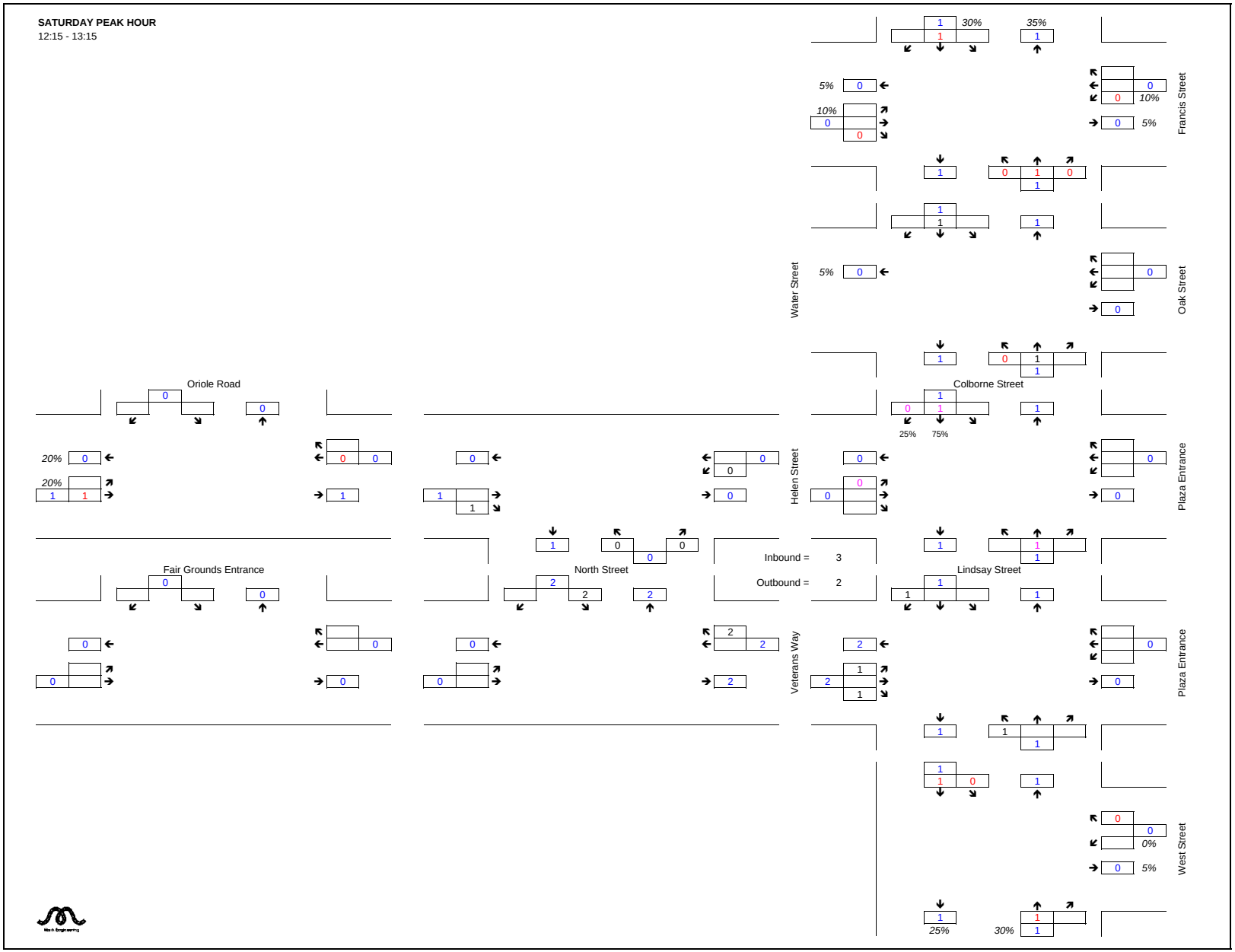

Wright Residential Traffic

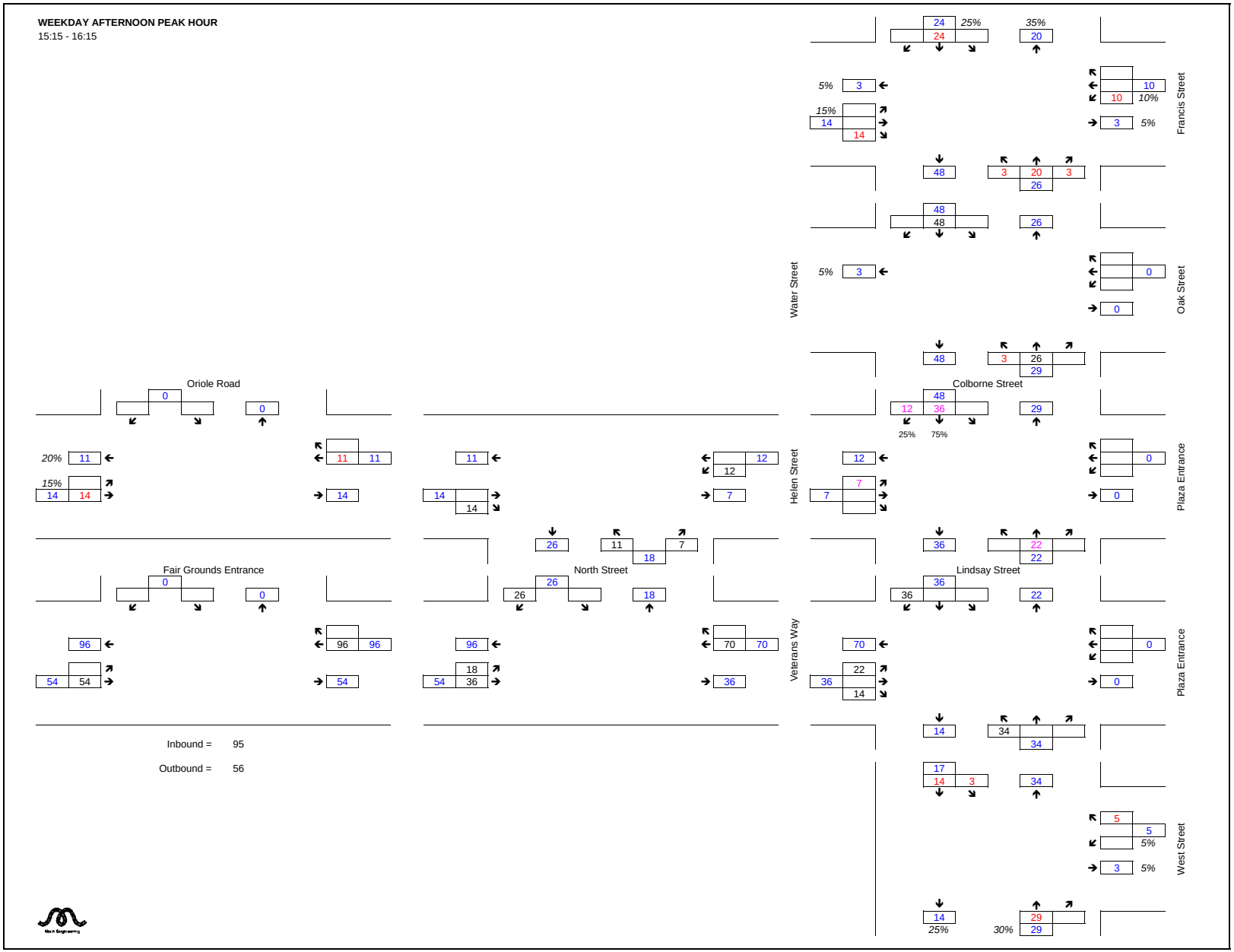

Wright Residential Traffic

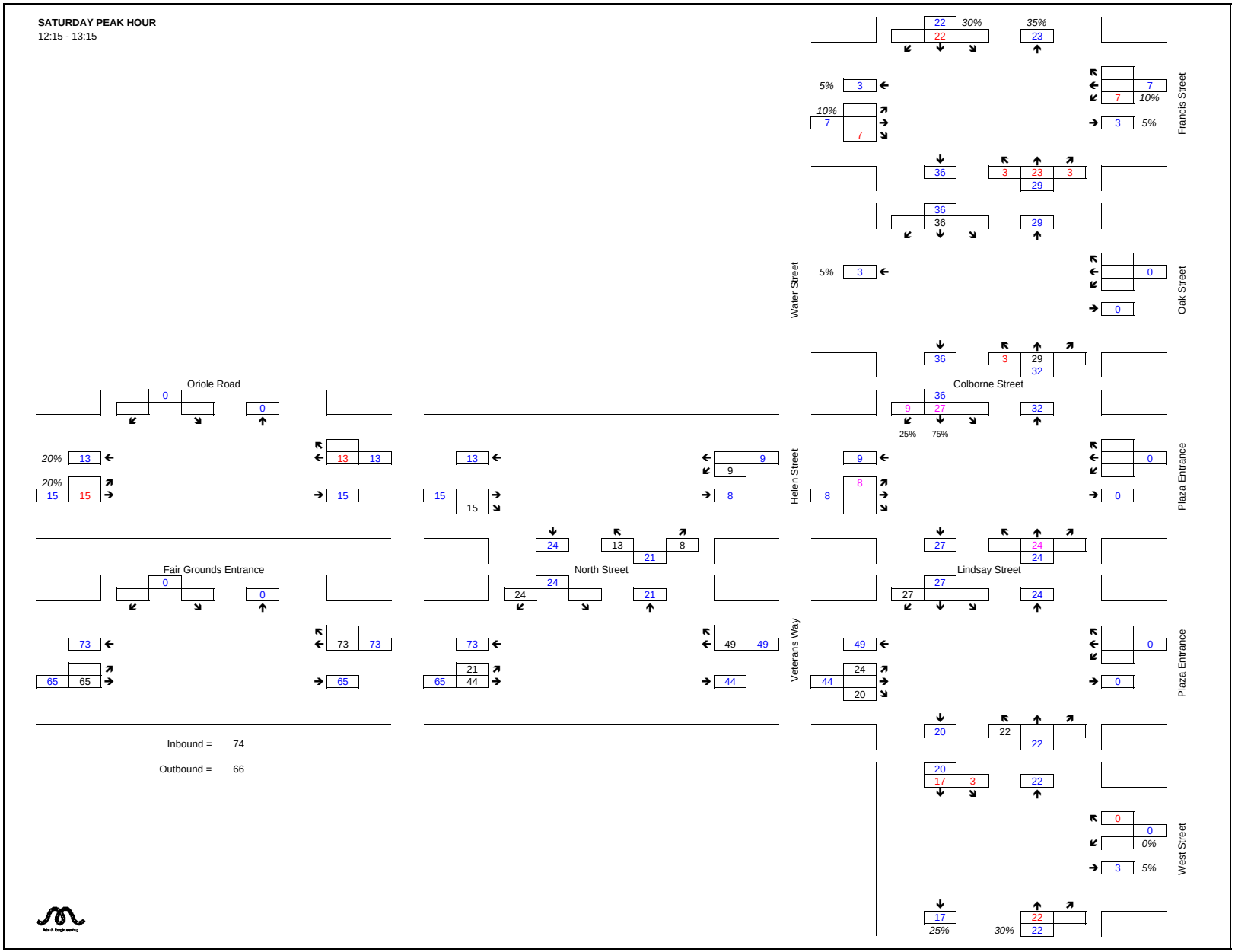

Wright Commercial Traffic

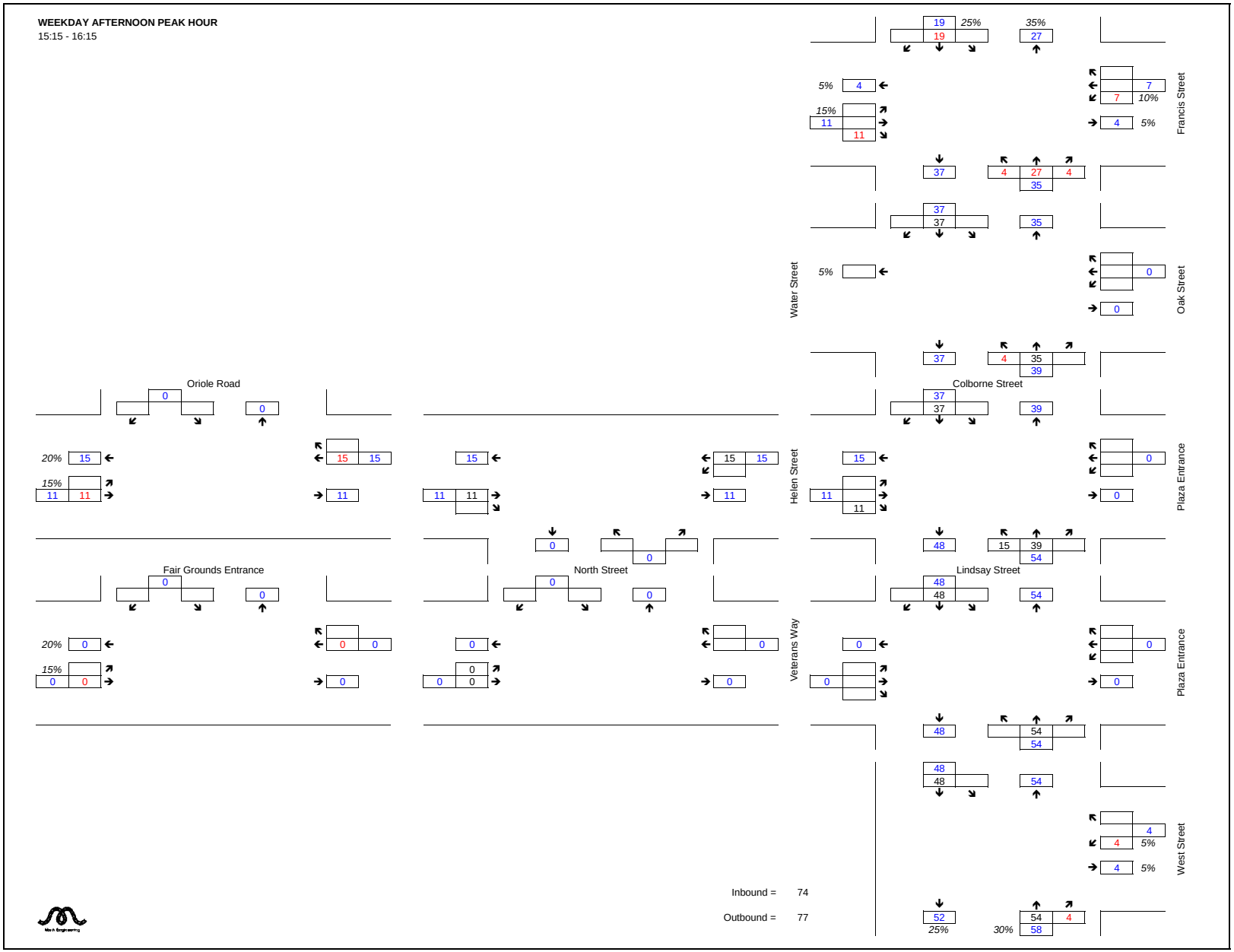

Wright Commercial Traffic

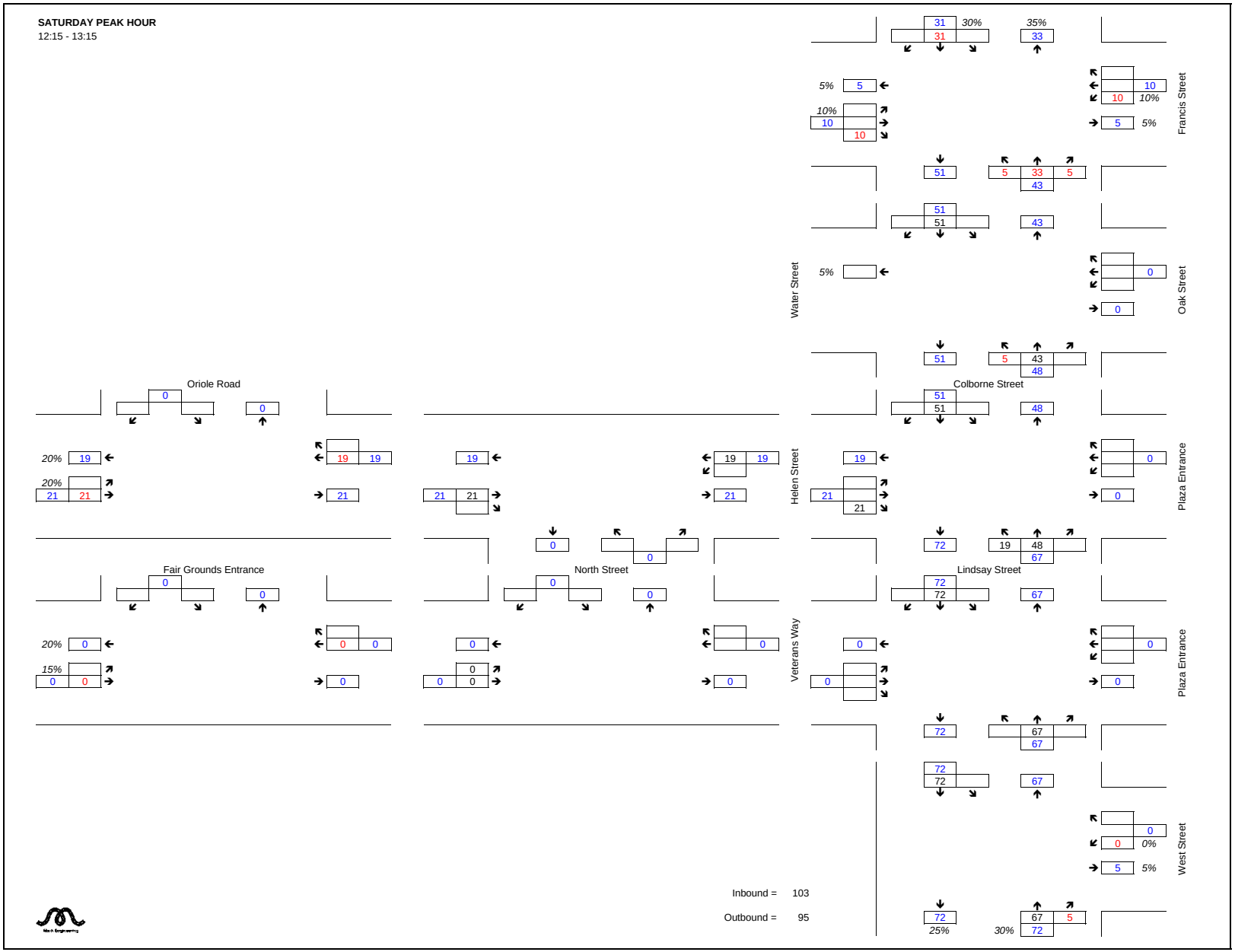

High School Traffic

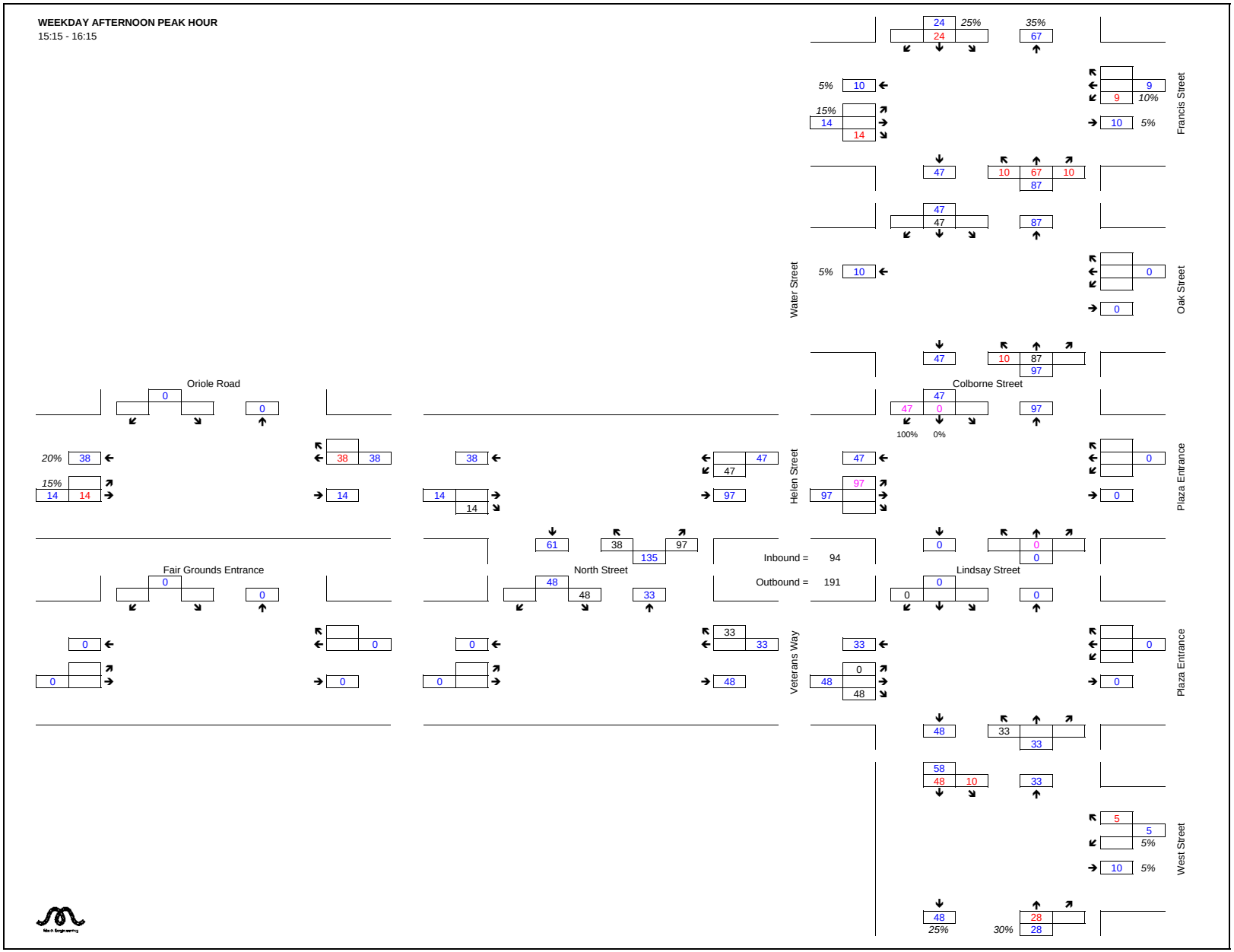

High School Traffic

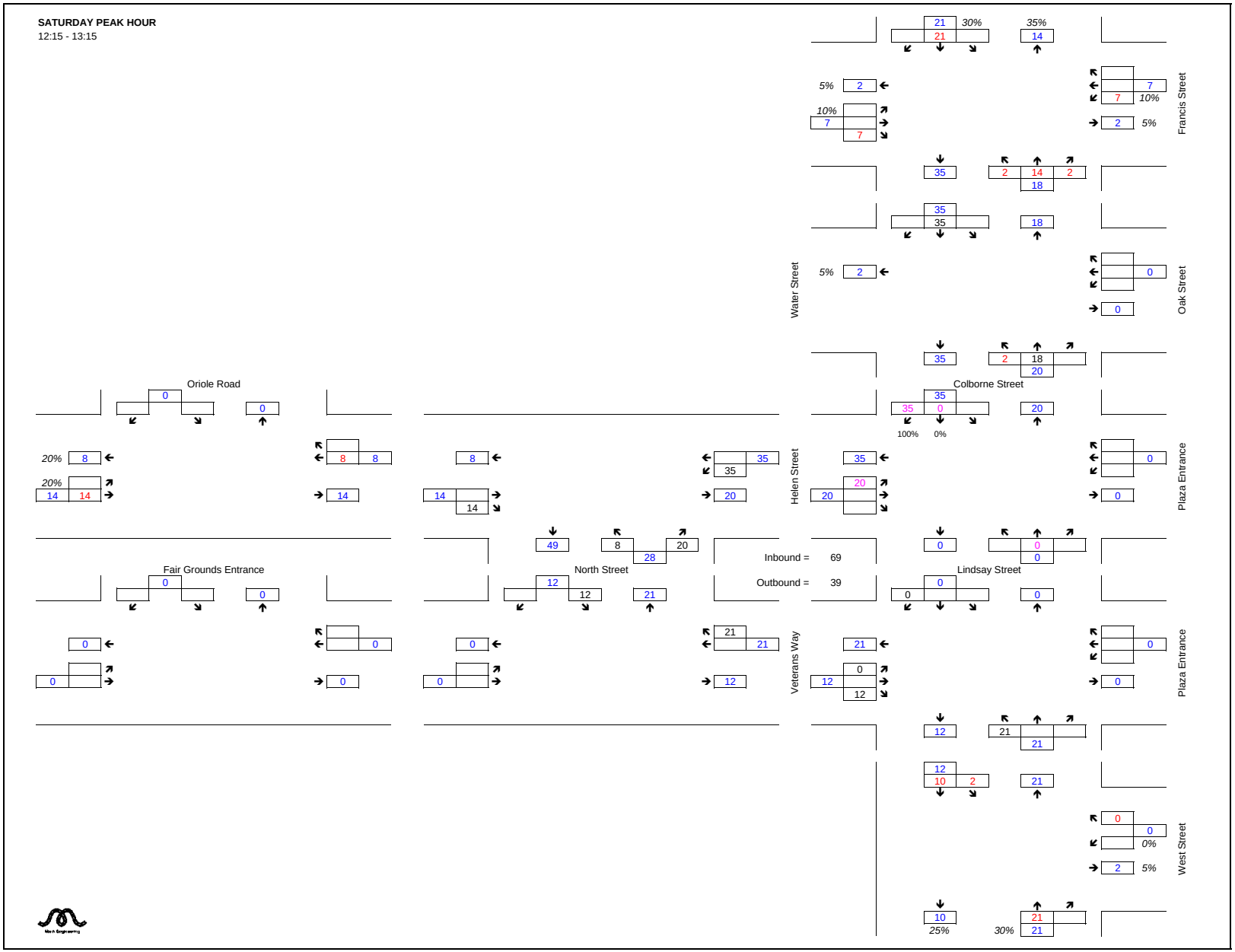

Total Developments Traffic

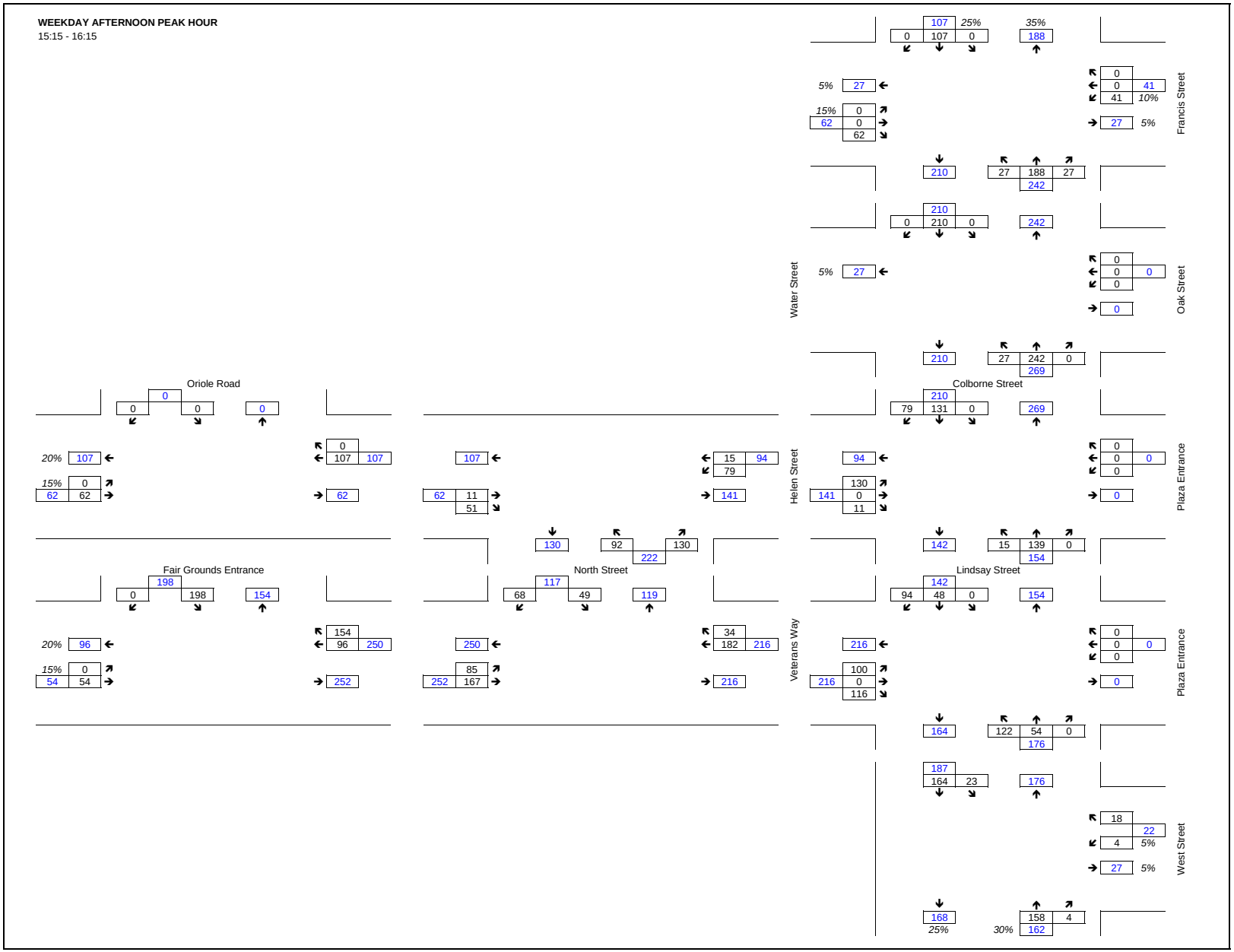

Total Developments Traffic

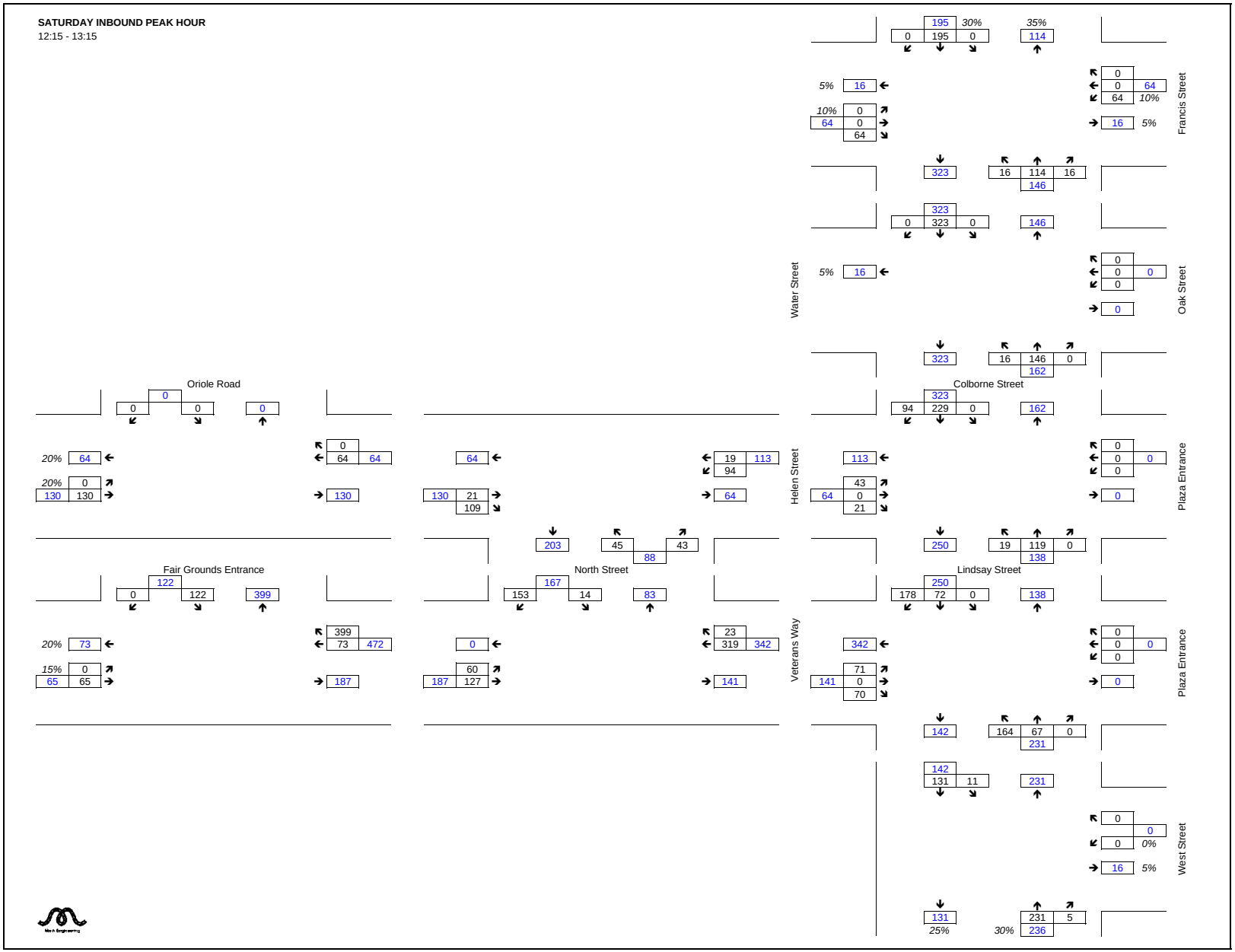

Total Developments Traffic

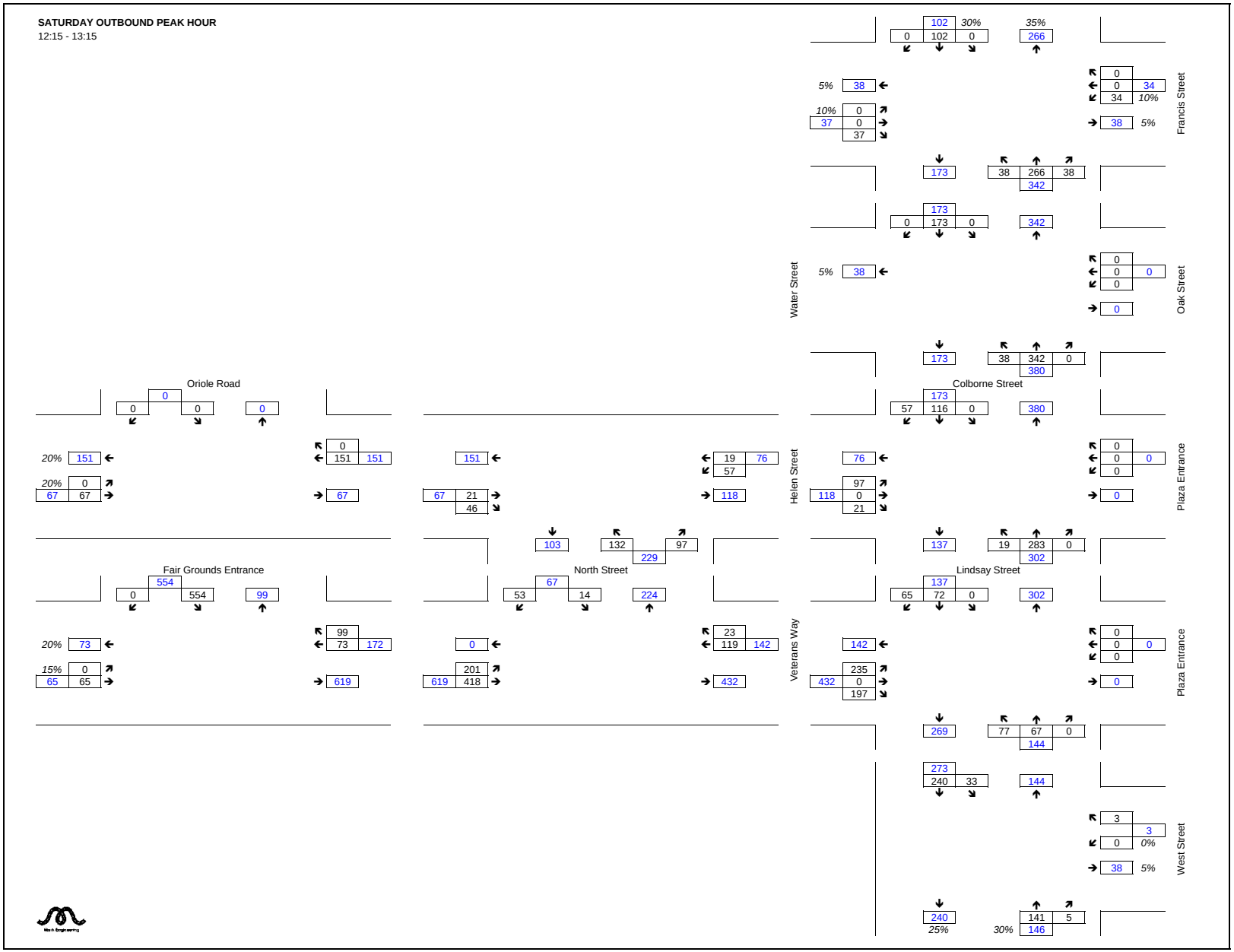

2010 Total Traffic

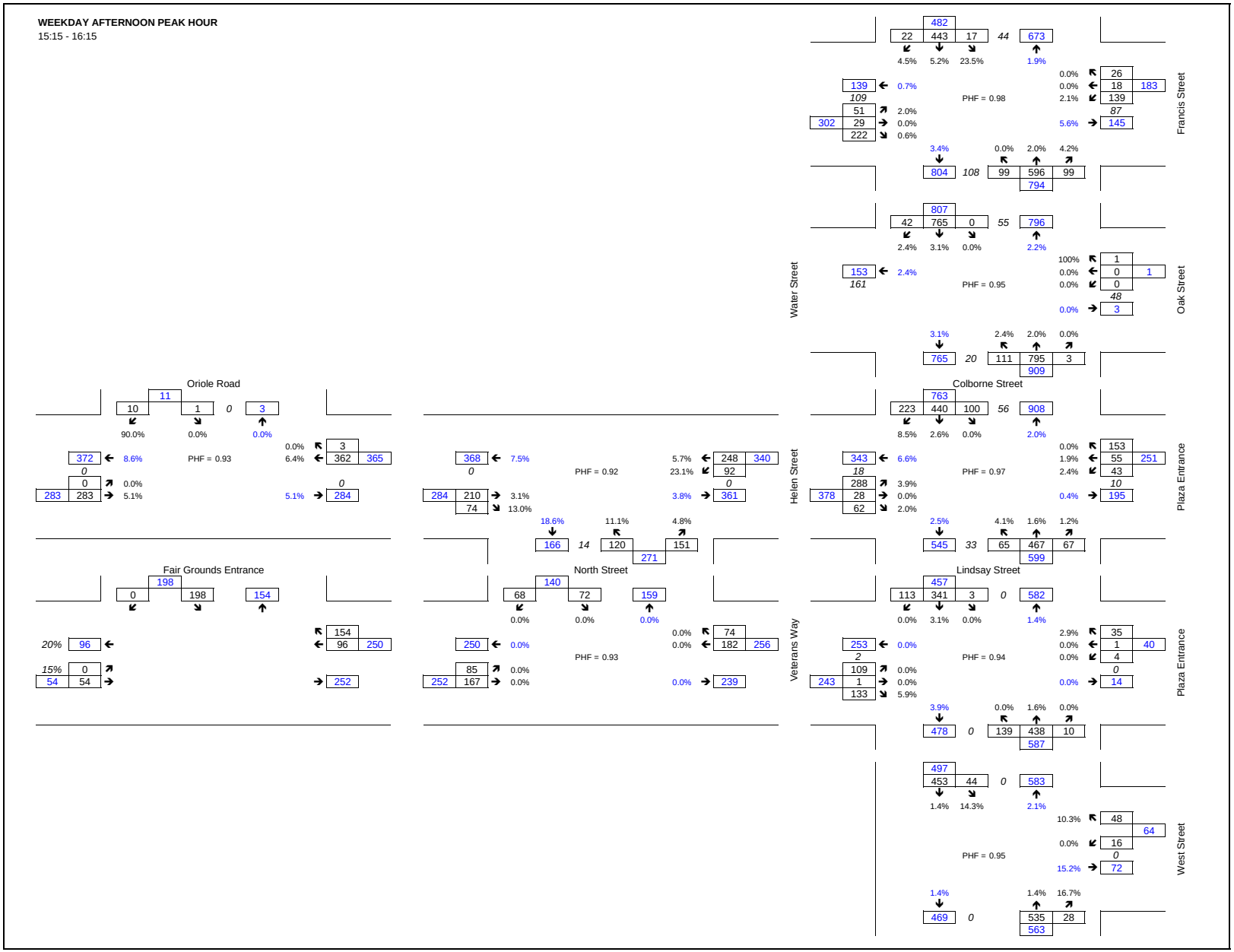

2010 Total Traffic

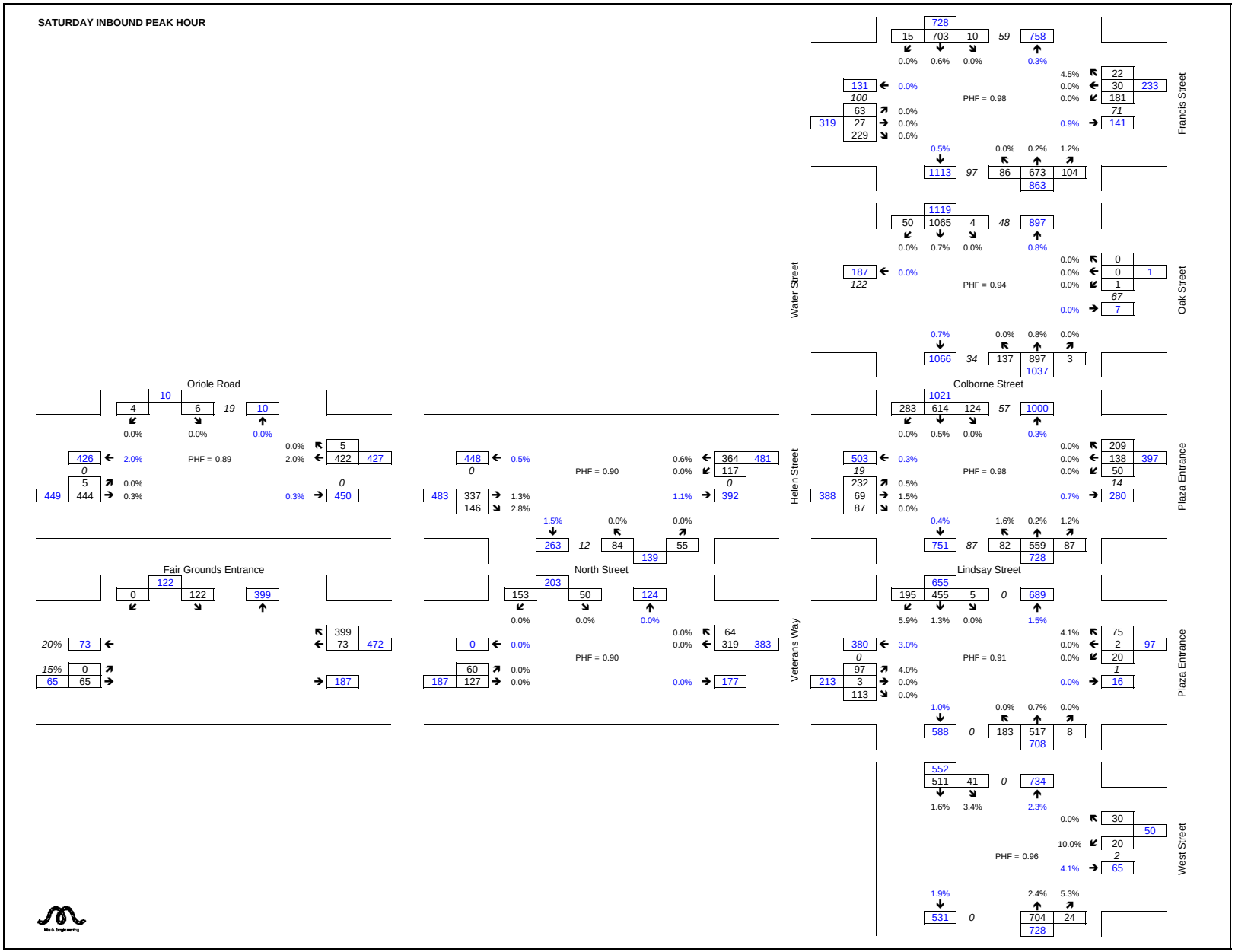

2010 Total Traffic

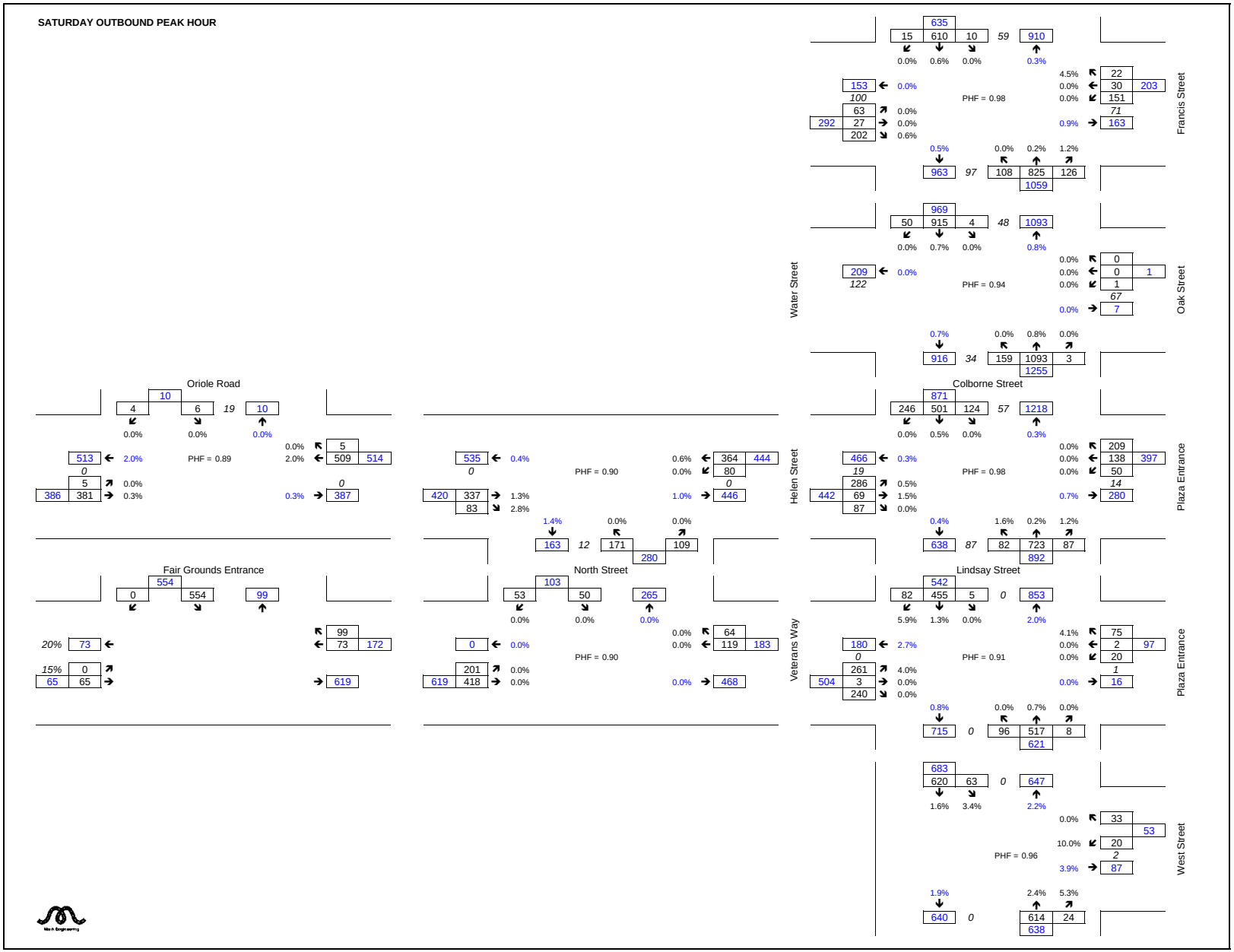

2015 Total Traffic

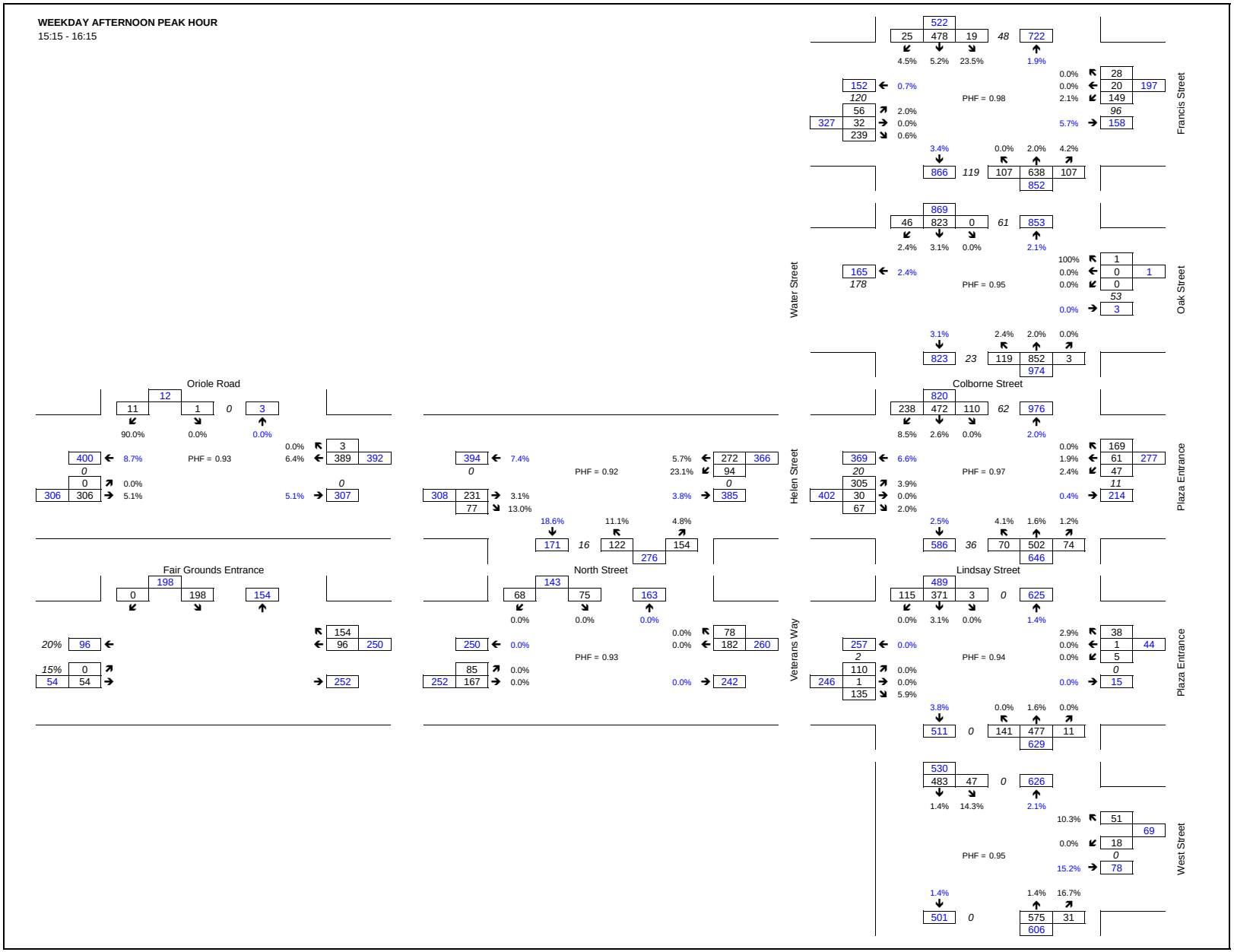

2015 Total Traffic

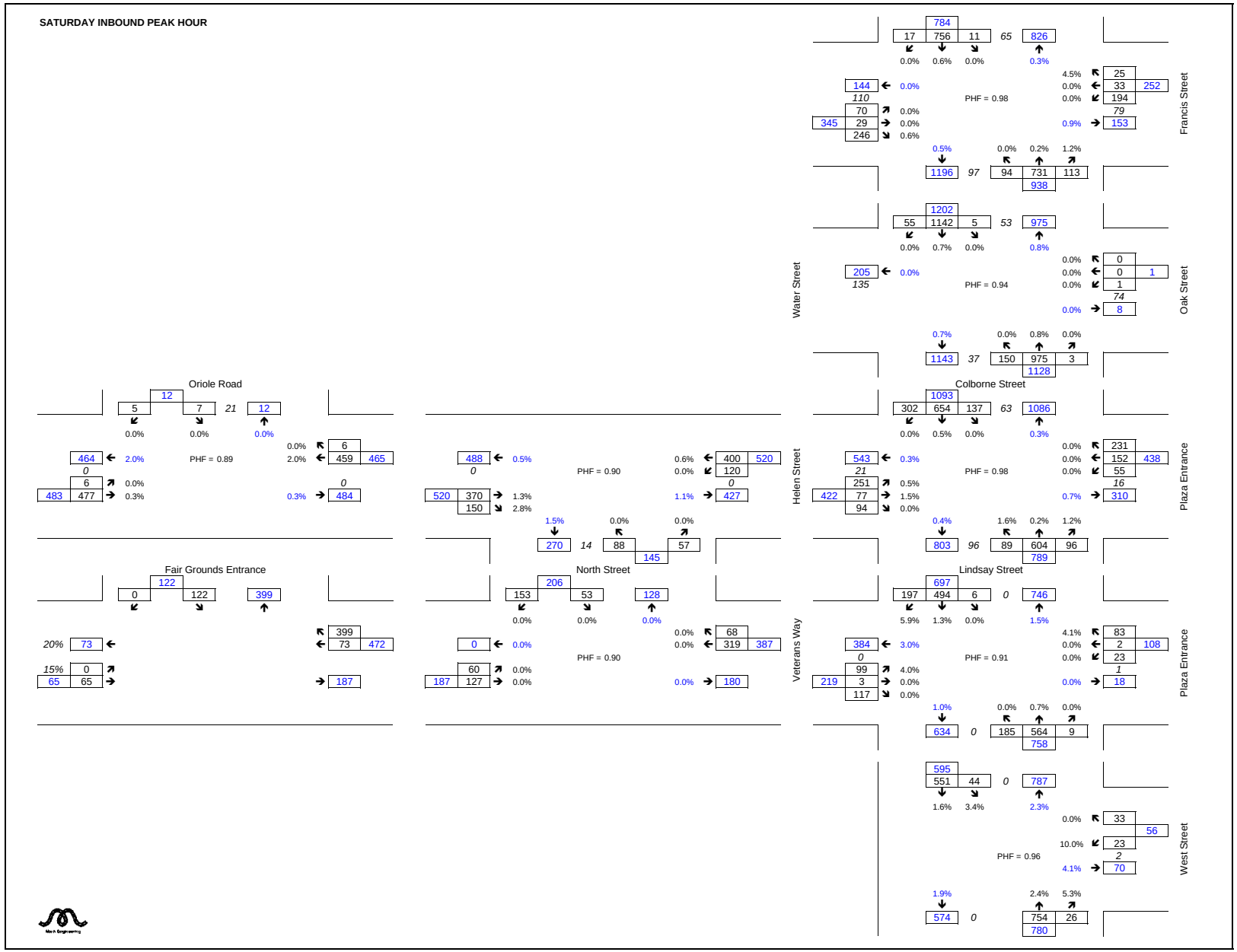

2015 Total Traffic

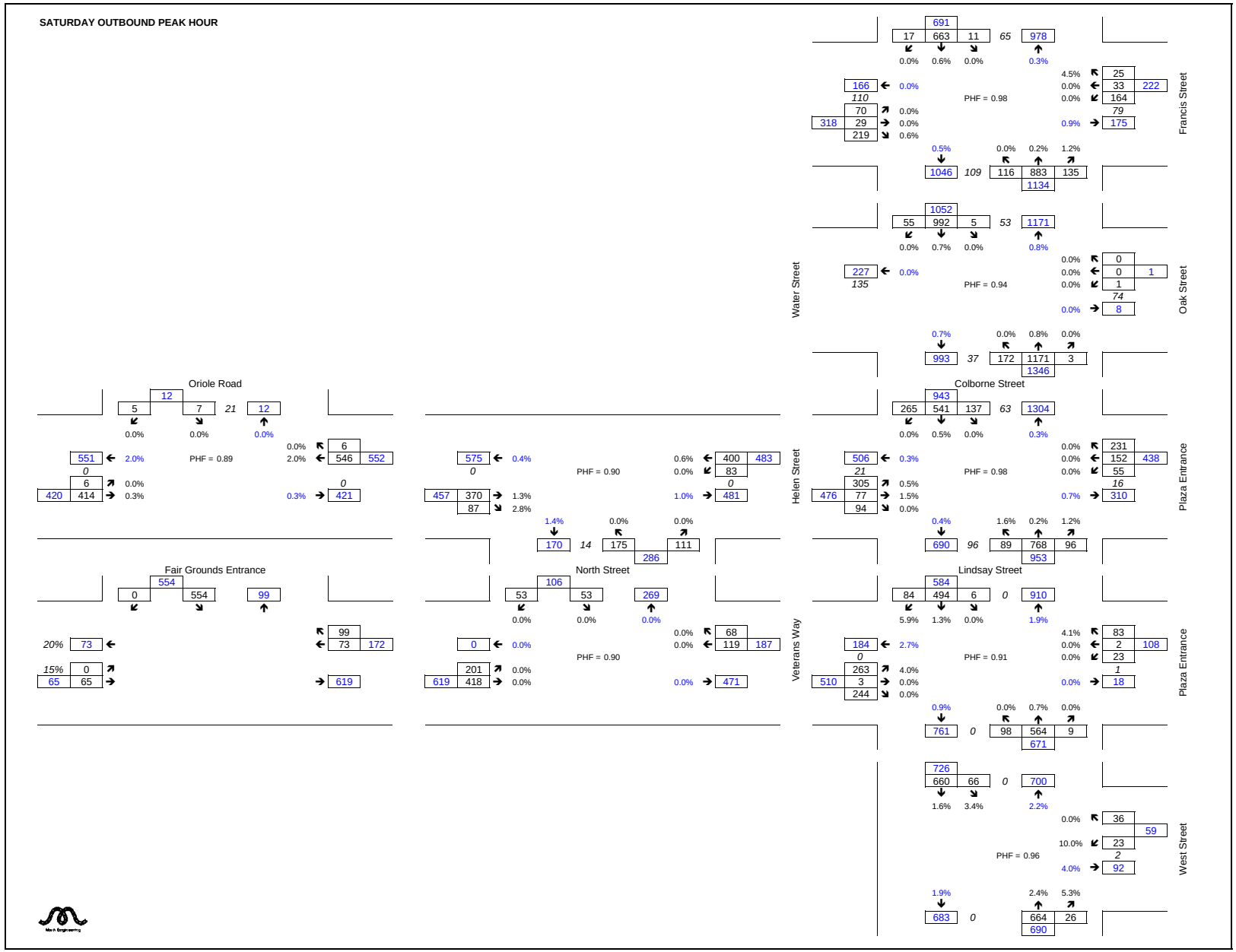

2020 Total Traffic

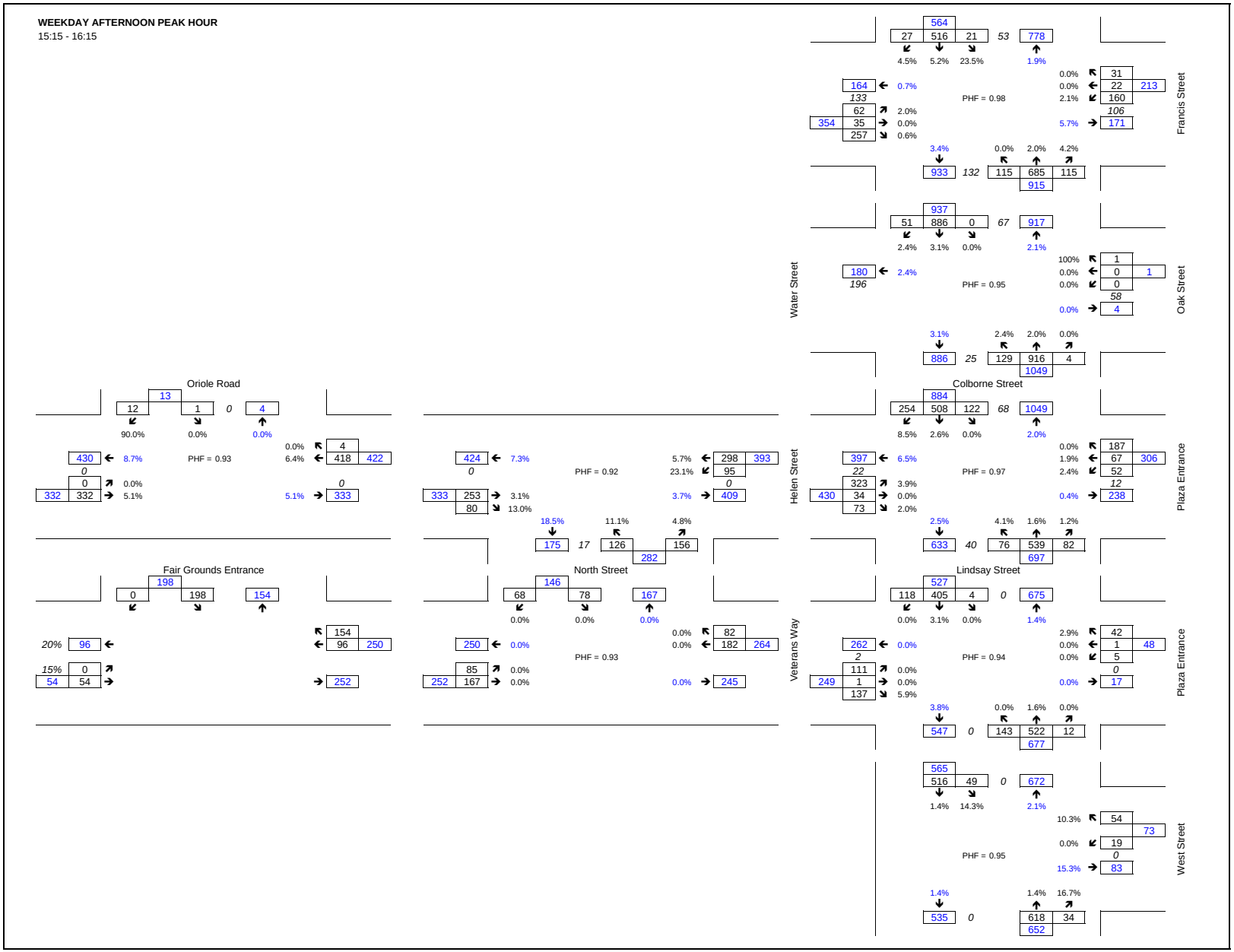

2020 Total Traffic

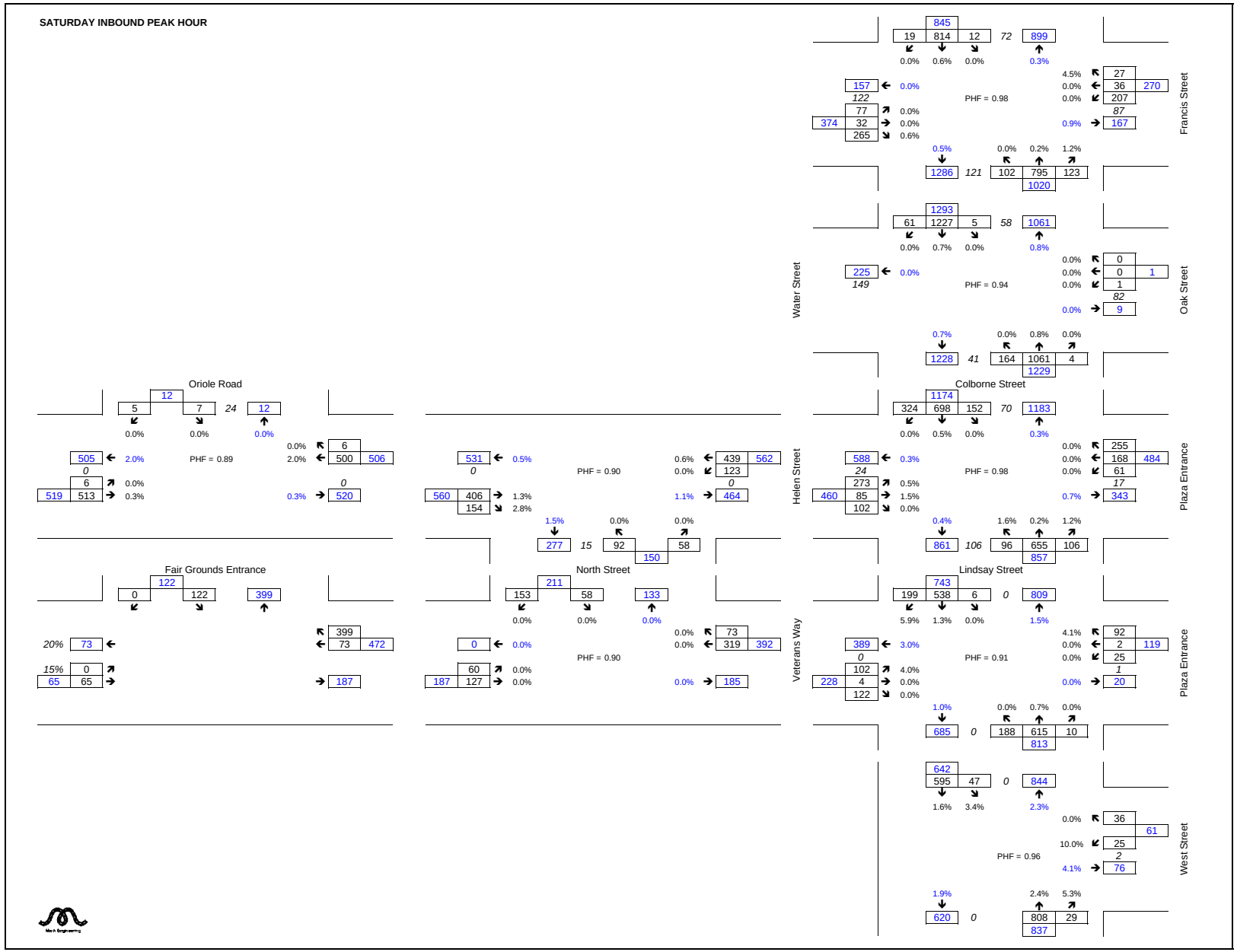

2020 Total Traffic

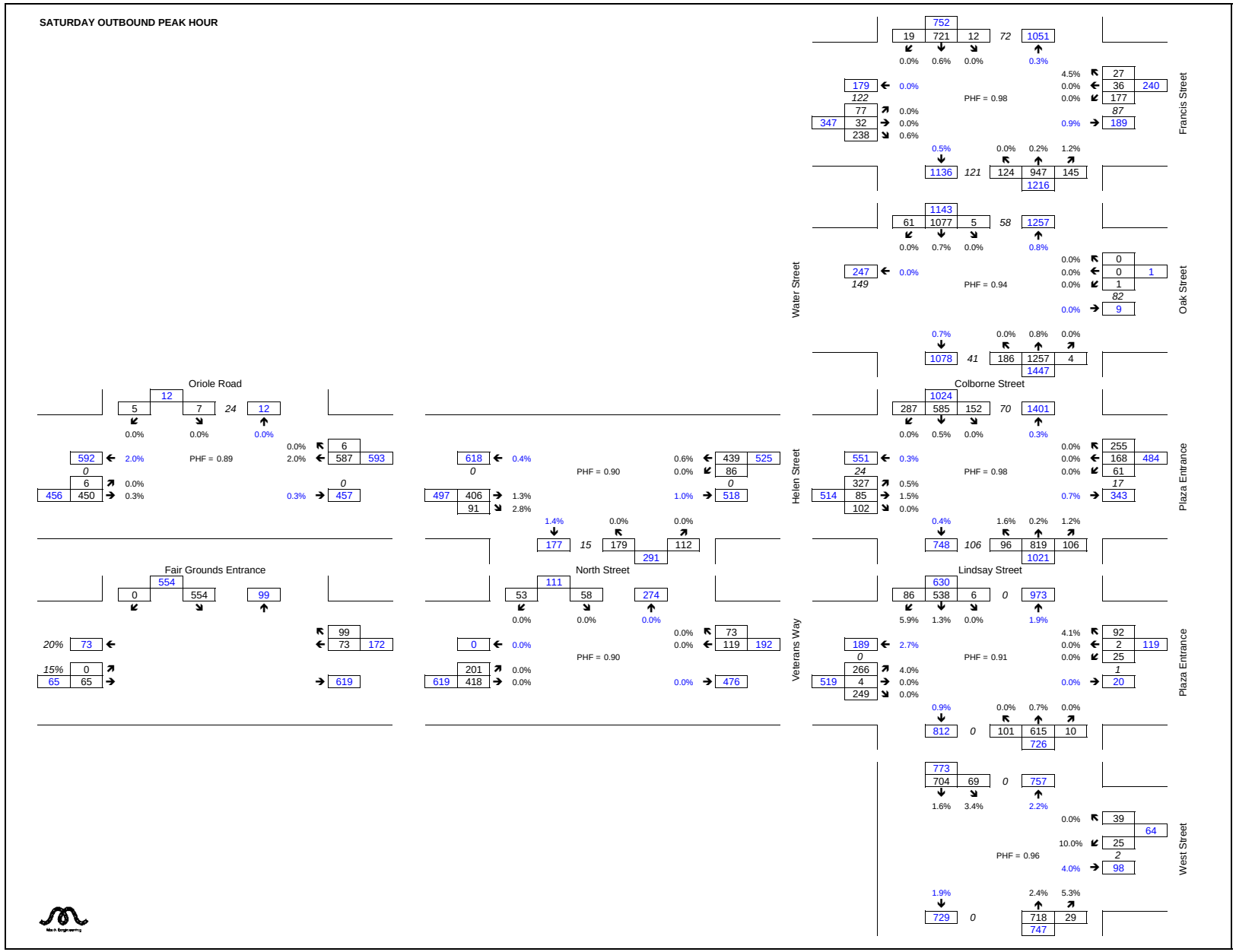

Traffic Analysis Outputs

HCS2000: Signalized Intersections Release 4.1d

Analyst: J.M. Mark
Agency: Mark Engineering
Date: 9/16/2009
Period: Weekday Peak Hour
Project ID: Fenelon Falls TIS - A10BP
E/W St: Francis Street

Inter.: Colborne St. & Francis St.
Area Type: All other areas
Jurisd: City of Kawartha Lakes
Year: 2010 Background Traffic
N/S St: Colborne Street

SIGNALIZED INTERSECTION SUMMARY

	Eastbound			Westbound			Northbound			Southbound		
	L	T	R	L	T	R	L	T	R	L	T	R
No. Lanes	0	2	0	0	1	0	1	1	0	1	1	0
LGConfig		LTR			LTR		L	TR		L	TR	
Volume	51	29	160	98	18	26	72	408	72	17	336	22
Lane Width		3.6			3.6		3.6	3.6		3.6	3.6	
RTOR Vol			0			0			0			0

Duration 0.25 Area Type: All other areas

Signal Operations

Phase Combination	1	2	3	4	5	6	7	8
EB Left	A				NB Left	A		
Thru	A				Thru	A		
Right	A				Right	A		
Peds	X				Peds	X		
WB Left	A				SB Left	A		
Thru	A				Thru	A		
Right	A				Right	A		
Peds	X				Peds	X		
NB Right					EB Right			
SB Right					WB Right			
Green	15.5				32.5			
Yellow	4.0				4.0			
All Red	2.0				2.0			

Cycle Length: 60.0 secs

Intersection Performance Summary

Appr/ Lane Grp	Lane Group Capacity	Adj Sat Flow Rate (s)	Ratios v/c	Ratios g/C	Lane Group Delay	Lane Group LOS	Approach Delay	Approach LOS
Eastbound								
LTR	626	2424	0.39	0.26	18.8	B	18.8	B
Westbound								
LTR	257	994	0.56	0.26	22.2	C	22.2	C
Northbound								
L	529	977	0.14	0.54	6.9	A		
TR	975	1800	0.50	0.54	9.1	A	8.8	A
Southbound								
L	343	633	0.05	0.54	6.5	A		
TR	969	1789	0.38	0.54	8.2	A	8.1	A

Intersection Delay = 11.9 (sec/veh) Intersection LOS = B

Sum of flow ratios for critical lane groups, Yc = Sum (v/s) = 0.42
Total lost time per cycle, L = 12.00 sec
Critical flow rate to capacity ratio, Xc = (Yc)(C)/(C-L) = 0.52

HCS2000: Signalized Intersections Release 4.1d

Analyst: J.M. Mark
Agency: Mark Engineering
Date: 9/16/2009
Period: Saturday Peak Hour
Project ID: Fenelon Falls TIS - A10BS
E/W St: Francis Street

Inter.: Colborne St. & Francis St.
Area Type: All other areas
Jurisd: City of Kawartha Lakes
Year: 2010 Background Traffic
N/S St: Colborne Street

SIGNALIZED INTERSECTION SUMMARY

	Eastbound			Westbound			Northbound			Southbound		
	L	T	R	L	T	R	L	T	R	L	T	R
No. Lanes	0	2	0	0	1	0	1	1	0	1	1	0
LGConfig		LTR			LTR		L	TR		L	TR	
Volume	63	27	165	117	30	22	70	559	88	10	508	15
Lane Width		3.6			3.6		3.6	3.6		3.6	3.6	
RTOR Vol			0			0			0			0

Duration 0.25 Area Type: All other areas

Signal Operations

Phase Combination	1	2	3	4	5	6	7	8
EB Left	A				NB Left	A		
Thru	A				Thru	A		
Right	A				Right	A		
Peds	X				Peds	X		
WB Left	A				SB Left	A		
Thru	A				Thru	A		
Right	A				Right	A		
Peds	X				Peds	X		
NB Right					EB Right			
SB Right					WB Right			
Green	15.4				32.6			
Yellow	4.0				4.0			
All Red	2.0				2.0			

Cycle Length: 60.0 secs

Intersection Performance Summary

Appr/ Lane Grp	Lane Group Capacity	Adj Sat Flow Rate (s)	Ratios v/c	Ratios g/C	Lane Group Delay	Lane Group LOS	Approach Delay	Approach LOS
Eastbound								
LTR	634	2472	0.41	0.26	19.0	B	19.0	B
Westbound								
LTR	256	999	0.67	0.26	26.8	C	26.8	C
Northbound								
L	390	718	0.18	0.54	7.2	A		
TR	1002	1845	0.66	0.54	11.3	B	10.9	B
Southbound								
L	293	539	0.03	0.54	6.4	A		
TR	1017	1871	0.52	0.54	9.2	A	9.2	A

Intersection Delay = 13.2 (sec/veh) Intersection LOS = B

Sum of flow ratios for critical lane groups, Yc = Sum (v/s) = 0.53
Total lost time per cycle, L = 12.00 sec

HCS2000: Signalized Intersections Release 4.1d

Analyst: J.M. Mark
Agency: Mark Engineering
Date: 11/17/2009
Period: Weekday Peak Hour
Project ID: Fenelon Falls TIS - A10TPc
E/W St: Francis Street

Inter.: Colborne St. & Francis St.
Area Type: All other areas
Jurisd: City of Kawartha Lakes
Year: 2010 Total Traffic
N/S St: Colborne Street

SIGNALIZED INTERSECTION SUMMARY

	Eastbound			Westbound			Northbound			Southbound		
	L	T	R	L	T	R	L	T	R	L	T	R
No. Lanes	0	1	1	0	1	0	1	1	0	1	1	0
LGConfig		LT	R		LTR		L	TR		L	TR	
Volume	51	29	222	139	18	26	99	596	99	17	443	22
Lane Width		3.6	3.6		3.6		3.6	3.6		3.6	3.6	
RTOR Vol			0			0			0			0

Duration 0.25 Area Type: All other areas

Signal Operations

Phase Combination	1	2	3	4	5	6	7	8
EB Left	A				NB Left	A		
Thru	A				Thru	A		
Right	A				Right	A		
Peds	X				Peds	X		
WB Left	A				SB Left	A		
Thru	A				Thru	A		
Right	A				Right	A		
Peds	X				Peds	X		
NB Right					EB Right			
SB Right					WB Right			
Green	19.0				29.0			
Yellow	4.0				4.0			
All Red	2.0				2.0			

Cycle Length: 60.0 secs

Intersection Performance Summary

Appr/ Lane Grp	Lane Group Capacity	Adj Sat Flow Rate (s)	Ratios v/c	Ratios g/C	Lane Group Delay	Lane Group LOS	Approach Delay	Approach LOS
Eastbound								
LT	413	1303	0.20	0.32	15.2	B	17.5	B
R	419	1324	0.54	0.32	18.3	B		
Westbound								
LTR	364	1151	0.51	0.32	18.0	B	18.0	B
Northbound								
L	364	754	0.28	0.48	9.7	A		
TR	865	1789	0.82	0.48	19.6	B	18.3	B
Southbound								
L	146	303	0.12	0.48	8.8	A		
TR	867	1793	0.55	0.48	11.6	B	11.5	B

Intersection Delay = 16.3 (sec/veh) Intersection LOS = B

Sum of flow ratios for critical lane groups, Yc = Sum (v/s) = 0.57
Total lost time per cycle, L = 12.00 sec
Critical flow rate to capacity ratio, Xc = (Yc)(C)/(C-L) = 0.71

HCS2000: Signalized Intersections Release 4.1d

Analyst: J.M. Mark
Agency: Mark Engineering
Date: 11/17/2009
Period: Saturday Inbound Peak Hour
Project ID: Fenelon Falls TIS - A10TSc EB CL to EB RTL
E/W St: Francis Street

Inter.: Colborne St. & Francis St.
Area Type: All other areas
Jurisd: City of Kawartha Lakes
Year: 2010 Total Traffic
N/S St: Colborne Street

SIGNALIZED INTERSECTION SUMMARY

	Eastbound			Westbound			Northbound			Southbound		
	L	T	R	L	T	R	L	T	R	L	T	R
No. Lanes	0	1	1	0	1	0	1	1	0	1	1	0
LGConfig		LT	R		LTR		L	TR		L	TR	
Volume	63	27	229	181	30	22	86	673	104	10	703	10
Lane Width		3.6	3.6		3.6		3.6	3.6		3.6	3.6	
RTOR Vol			0			0			0			0

Duration 0.25 Area Type: All other areas

Signal Operations

Phase Combination	1	2	3	4	5	6	7	8
EB Left	A				NB Left	A		
Thru	A				Thru	A		
Right	A				Right	A		
Peds	X				Peds	X		
WB Left	A				SB Left	A		
Thru	A				Thru	A		
Right	A				Right	A		
Peds	X				Peds	X		
NB Right					EB Right			
SB Right					WB Right			
Green	17.5				35.5			
Yellow	4.0				4.0			
All Red	2.0				2.0			

Cycle Length: 65.0 secs

Intersection Performance Summary

Appr/ Lane Grp	Lane Group Capacity	Adj Sat Flow Rate (s)	Ratios v/c	Ratios g/C	Lane Group Delay	Lane Group LOS	Approach Delay	Approach LOS
Eastbound								
LT	346	1285	0.27	0.27	19.1	B	24.0	C
R	351	1302	0.67	0.27	25.9	C		
Westbound								
LTR	309	1149	0.77	0.27	33.2	C	33.2	C
Northbound								
L	241	441	0.37	0.55	9.3	A		
TR	1003	1837	0.79	0.55	16.1	B	15.5	B
Southbound								
L	191	350	0.05	0.55	7.0	A		
TR	1025	1876	0.71	0.55	13.2	B	13.1	B

Intersection Delay = 17.9 (sec/veh) Intersection LOS = B

Sum of flow ratios for critical lane groups, Yc = Sum (v/s) = 0.64
Total lost time per cycle, L = 12.00 sec
Critical flow rate to capacity ratio, Xc = (Yc)(C)/(C-L) = 0.78

HCS2000: Signalized Intersections Release 4.1d

Analyst: J.M. Mark
Agency: Mark Engineering
Date: 9/16/2009
Period: Saturday Outbound Peak Hour
Project ID: Fenelon Falls TIS - A10TTc EB CL to EB RTL
E/W St: Francis Street

Inter.: Colborne St. & Francis St.
Area Type: All other areas
Jurisd: City of Kawartha Lakes
Year: 2010 Total Traffic
N/S St: Colborne Street

SIGNALIZED INTERSECTION SUMMARY

	Eastbound			Westbound			Northbound			Southbound		
	L	T	R	L	T	R	L	T	R	L	T	R
No. Lanes	0	1	1	0	1	0	1	1	0	1	1	0
LGConfig		LT	R		LTR		L	TR		L	TR	
Volume	63	27	211	157	30	22	111	846	129	10	625	10
Lane Width		3.6	3.6		3.6		3.6	3.6		3.6	3.6	
RTOR Vol			0			0			0			0

Duration 0.25 Area Type: All other areas

Signal Operations

Phase Combination	1	2	3	4		5	6	7	8
EB Left	A				NB Left	A			
Thru	A				Thru	A			
Right	A				Right	A			
Peds	X				Peds	X			
WB Left	A				SB Left	A			
Thru	A				Thru	A			
Right	A				Right	A			
Peds	X				Peds	X			
NB Right					EB Right				
SB Right					WB Right				
Green	17.8					45.2			
Yellow	4.0					4.0			
All Red	2.0					2.0			

Cycle Length: 75.0 secs

Intersection Performance Summary

Appr/ Lane Grp	Lane Group Capacity	Adj Sat Flow Rate (s)	Ratios v/c	Ratios g/C	Lane Group Delay	Lane Group LOS	Approach Delay	Approach LOS
Eastbound								
LT	304	1279	0.30	0.24	24.1	C	31.2	C
R	300	1262	0.72	0.24	34.3	C		
Westbound								
LTR	269	1133	0.79	0.24	41.7	D	41.7	D
Northbound								
L	359	596	0.31	0.60	7.8	A		
TR	1109	1840	0.90	0.60	22.7	C	21.2	C
Southbound								
L	108	180	0.09	0.60	6.6	A		
TR	1131	1876	0.57	0.60	9.8	A	9.7	A

Intersection Delay = 21.1 (sec/veh) Intersection LOS = C

Sum of flow ratios for critical lane groups, Yc = Sum (v/s) = 0.73
Total lost time per cycle, L = 12.00 sec
Critical flow rate to capacity ratio, Xc = (Yc)(C)/(C-L) = 0.87

HCS2000: Signalized Intersections Release 4.1d

Analyst: J.M. Mark
Agency: Mark Engineering
Date: 9/16/2009
Period: Weekday Peak Hour
Project ID: Fenelon Falls TIS - A15BP
E/W St: Francis Street

Inter.: Colborne St. & Francis St.
Area Type: All other areas
Jurisd: City of Kawartha Lakes
Year: 2015 Background Traffic
N/S St: Colborne Street

SIGNALIZED INTERSECTION SUMMARY

	Eastbound			Westbound			Northbound			Southbound		
	L	T	R	L	T	R	L	T	R	L	T	R
No. Lanes	0	2	0	0	1	0	1	1	0	1	1	0
LGConfig		LTR			LTR		L	TR		L	TR	
Volume	56	32	177	108	20	28	80	450	80	19	371	25
Lane Width		3.6			3.6		3.6	3.6		3.6	3.6	
RTOR Vol			0			0			0			0

Duration 0.25 Area Type: All other areas

Signal Operations

Phase Combination	1	2	3	4	5	6	7	8
EB Left	A				NB Left	A		
Thru	A				Thru	A		
Right	A				Right	A		
Peds	X				Peds	X		
WB Left	A				SB Left	A		
Thru	A				Thru	A		
Right	A				Right	A		
Peds	X				Peds	X		
NB Right					EB Right			
SB Right					WB Right			
Green	15.4				32.6			
Yellow	4.0				4.0			
All Red	2.0				2.0			

Cycle Length: 60.0 secs

Intersection Performance Summary

Appr/ Lane Grp	Lane Group Capacity	Adj Sat Flow Rate (s)	Ratios v/c	Ratios g/C	Lane Group Delay	Lane Group LOS	Approach Delay	Approach LOS
Eastbound								
LTR	610	2375	0.44	0.26	19.2	B	19.2	B
Westbound								
LTR	238	928	0.67	0.26	27.0	C	27.0	C
Northbound								
L	496	913	0.17	0.54	7.0	A		
TR	976	1797	0.55	0.54	9.6	A	9.3	A
Southbound								
L	310	571	0.06	0.54	6.6	A		
TR	971	1787	0.42	0.54	8.4	A	8.3	A

Intersection Delay = 12.7 (sec/veh) Intersection LOS = B

Sum of flow ratios for critical lane groups, Yc = Sum (v/s) = 0.47
Total lost time per cycle, L = 12.00 sec
Critical flow rate to capacity ratio, Xc = (Yc)(C)/(C-L) = 0.59

HCS2000: Signalized Intersections Release 4.1d

Analyst: J.M. Mark
Agency: Mark Engineering
Date: 9/16/2009
Period: Saturday Peak Hour
Project ID: Fenelon Falls TIS - A15BS
E/W St: Francis Street

Inter.: Colborne St. & Francis St.
Area Type: All other areas
Jurisd: City of Kawartha Lakes
Year: 2015 Background Traffic
N/S St: Colborne Street

SIGNALIZED INTERSECTION SUMMARY

	Eastbound			Westbound			Northbound			Southbound		
	L	T	R	L	T	R	L	T	R	L	T	R
No. Lanes	0	2	0	0	1	0	1	1	0	1	1	0
LGConfig		LTR			LTR		L	TR		L	TR	
Volume	70	29	182	130	33	25	78	617	97	11	561	17
Lane Width		3.6			3.6		3.6	3.6		3.6	3.6	
RTOR Vol			0			0			0			0

Duration 0.25 Area Type: All other areas

Signal Operations

Phase Combination	1	2	3	4	5	6	7	8
EB Left	A				NB Left	A		
Thru	A				Thru	A		
Right	A				Right	A		
Peds	X				Peds	X		
WB Left	A				SB Left	A		
Thru	A				Thru	A		
Right	A				Right	A		
Peds	X				Peds	X		
NB Right					EB Right			
SB Right					WB Right			
Green	16.0				32.0			
Yellow	4.0				4.0			
All Red	2.0				2.0			

Cycle Length: 60.0 secs

Intersection Performance Summary

Appr/ Lane Grp	Lane Group Capacity	Adj Sat Flow Rate (s)	Ratios v/c	Ratios g/C	Lane Group Delay	Lane Group LOS	Approach Delay	Approach LOS
Eastbound								
LTR	661	2480	0.43	0.27	18.7	B	18.7	B
Westbound								
LTR	256	959	0.75	0.27	32.2	C	32.2	C
Northbound								
L	334	627	0.24	0.53	7.9	A		
TR	984	1845	0.74	0.53	13.8	B	13.2	B
Southbound								
L	229	430	0.05	0.53	6.8	A		
TR	998	1871	0.59	0.53	10.5	B	10.4	B

Intersection Delay = 15.1 (sec/veh) Intersection LOS = B

Sum of flow ratios for critical lane groups, Yc = Sum (v/s) = 0.60
Total lost time per cycle, L = 12.00 sec
Critical flow rate to capacity ratio, Xc = (Yc)(C)/(C-L) = 0.75

HCS2000: Signalized Intersections Release 4.1d

Analyst: J.M. Mark
Agency: Mark Engineering
Date: 11/17/2009
Period: Weekday Peak Hour
Project ID: Fenelon Falls TIS - A15TP
E/W St: Francis Street

Inter.: Colborne St. & Francis St.
Area Type: All other areas
Jurisd: City of Kawartha Lakes
Year: 2015 Total Traffic
N/S St: Colborne Street

SIGNALIZED INTERSECTION SUMMARY

	Eastbound			Westbound			Northbound			Southbound		
	L	T	R	L	T	R	L	T	R	L	T	R
No. Lanes	0	1	1	0	1	0	1	1	0	1	1	0
LGConfig		LT	R		LTR		L	TR		L	TR	
Volume	56	32	239	149	20	28	107	638	107	19	478	25
Lane Width		3.6	3.6		3.6		3.6	3.6		3.6	3.6	
RTOR Vol			0			0			0			0

Duration 0.25 Area Type: All other areas

Signal Operations

Phase Combination	1	2	3	4	5	6	7	8
EB Left	A				NB Left	A		
Thru	A				Thru	A		
Right	A				Right	A		
Peds	X				Peds	X		
WB Left	A				SB Left	A		
Thru	A				Thru	A		
Right	A				Right	A		
Peds	X				Peds	X		
NB Right					EB Right			
SB Right					WB Right			
Green	19.0				29.0			
Yellow	4.0				4.0			
All Red	2.0				2.0			

Cycle Length: 60.0 secs

Intersection Performance Summary

Appr/ Lane Grp	Lane Group Capacity	Adj Sat Flow Rate (s)	Ratios v/c	Ratios g/C	Lane Group Delay	Lane Group LOS	Approach Delay	Approach LOS
Eastbound								
LT	404	1276	0.22	0.32	15.4	B	18.4	B
R	411	1297	0.59	0.32	19.6	B		
Westbound								
LTR	358	1130	0.56	0.32	19.1	B	19.1	B
Northbound								
L	332	687	0.33	0.48	10.1	B		
TR	863	1785	0.88	0.48	24.4	C	22.6	C
Southbound								
L	120	241	0.16	0.48	9.3	A		
TR	866	1791	0.59	0.48	12.3	B	12.2	B

Intersection Delay = 18.7 (sec/veh) Intersection LOS = B

Sum of flow ratios for critical lane groups, Yc = Sum (v/s) = 0.61
Total lost time per cycle, L = 12.00 sec
Critical flow rate to capacity ratio, Xc = (Yc)(C)/(C-L) = 0.77

HCS2000: Signalized Intersections Release 4.1d

Analyst: J.M. Mark | Inter.: Colborne St. & Francis St.
Agency: Mark Engineering | Area Type: All other areas
Date: 11/17/2009 | Jurisd: City of Kawartha Lakes
Period: Saturday Inbound Peak Hour | Year: 2015 Total Traffic
Project ID: Fenelon Falls TIS - A15TS EB CL to EB RTL
E/W St: Francis Street | N/S St: Colborne Street

SIGNALIZED INTERSECTION SUMMARY

	Eastbound			Westbound			Northbound			Southbound		
	L	T	R	L	T	R	L	T	R	L	T	R
No. Lanes	0	1	1	0	1	0	1	1	0	1	1	0
LGConfig		LT	R		LTR		L	TR		L	TR	
Volume	70	29	246	194	33	25	94	731	113	11	756	17
Lane Width		3.6	3.6		3.6		3.6	3.6		3.6	3.6	
RTOR Vol			0			0			0			0

Duration 0.25 Area Type: All other areas

Signal Operations

Phase Combination	1	2	3	4		5	6	7	8
EB Left	A				NB Left	A			
Thru	A				Thru	A			
Right	A				Right	A			
Peds	X				Peds	X			
WB Left	A				SB Left	A			
Thru	A				Thru	A			
Right	A				Right	A			
Peds	X				Peds	X			
NB Right					EB Right				
SB Right					WB Right				
Green	17.6					35.4			
Yellow	4.0					4.0			
All Red	2.0					2.0			

Cycle Length: 65.0 secs

Intersection Performance Summary

Appr/ Lane Grp	Lane Group Capacity	Adj Sat Flow Rate (s)	Ratios v/c	Ratios g/C	Lane Group Delay	Lane Group LOS	Approach Delay	Approach LOS
Eastbound								
LT	341	1258	0.32	0.27	19.5	B	28.5	C
R	353	1304	0.77	0.27	32.1	C		
Westbound								
LTR	308	1139	0.91	0.27	52.8	D	52.8	D
Northbound								
L	143	262	0.73	0.54	28.1	C		
TR	1000	1837	0.94	0.54	29.5	C	29.4	C
Southbound								
L	115	211	0.10	0.54	7.5	A		
TR	1020	1873	0.84	0.54	19.0	B	18.8	B

Intersection Delay = 28.2 (sec/veh) Intersection LOS = C

Sum of flow ratios for critical lane groups, Yc = Sum (v/s) = 0.76
Total lost time per cycle, L = 12.00 sec
Critical flow rate to capacity ratio, Xc = (Yc)(C)/(C-L) = 0.93

HCS2000: Signalized Intersections Release 4.1d

Analyst: J.M. Mark | Inter.: Colborne St. & Francis St.
Agency: Mark Engineering | Area Type: All other areas
Date: 11/17/2009 | Jurisd: City of Kawartha Lakes
Period: Saturday Outbound Peak Hour | Year: 2015 Total Traffic
Project ID: Fenelon Falls TIS - A15TT EB CL to EB RTL
E/W St: Francis Street | N/S St: Colborne Street

SIGNALIZED INTERSECTION SUMMARY

	Eastbound			Westbound			Northbound			Southbound		
	L	T	R	L	T	R	L	T	R	L	T	R
No. Lanes	0	1	1	0	1	0	1	1	0	1	1	0
LGConfig		LT	R		LTR		L	TR		L	TR	
Volume	70	29	219	164	33	25	116	883	135	11	663	17
Lane Width		3.6	3.6		3.6		3.6	3.6		3.6	3.6	
RTOR Vol			0			0			0			0

Duration 0.25 Area Type: All other areas

Signal Operations

Phase Combination	1	2	3	4	5	6	7	8
EB Left	A				NB Left	A		
Thru	A				Thru	A		
Right	A				Right	A		
Peds	X				Peds	X		
WB Left	A				SB Left	A		
Thru	A				Thru	A		
Right	A				Right	A		
Peds	X				Peds	X		
NB Right					EB Right			
SB Right					WB Right			
Green	26.0				67.0			
Yellow	4.0				4.0			
All Red	2.0				2.0			

Cycle Length: 105.0 secs

Intersection Performance Summary

Appr/ Lane Grp	Lane Group Capacity	Adj Sat Flow Rate (s)	Ratios v/c	Ratios g/C	Lane Group Delay	Lane Group LOS	Approach Delay	Approach LOS
Eastbound								
LT	313	1265	0.32	0.25	32.9	C	40.8	D
R	308	1244	0.72	0.25	44.4	D		
Westbound								
LTR	256	1033	0.89	0.25	67.0	E	67.0	E
Northbound								
L	351	550	0.34	0.64	9.3	A		
TR	1173	1838	0.89	0.64	24.2	C	22.7	C
Southbound								
L	110	172	0.10	0.64	7.7	A		
TR	1195	1872	0.58	0.64	11.6	B	11.6	B

Intersection Delay = 26.1 (sec/veh) Intersection LOS = C

Sum of flow ratios for critical lane groups, Yc = Sum (v/s) = 0.79
Total lost time per cycle, L = 12.00 sec
Critical flow rate to capacity ratio, Xc = (Yc)(C)/(C-L) = 0.89

HCS2000: Signalized Intersections Release 4.1d

Analyst: J.M. Mark
Agency: Mark Engineering
Date: 9/16/2009
Period: Weekday Peak Hour
Project ID: Fenelon Falls TIS - A20BP
E/W St: Francis Street

Inter.: Colborne St. & Francis St.
Area Type: All other areas
Jurisd: City of Kawartha Lakes
Year: 2020 Background Traffic
N/S St: Colborne Street

SIGNALIZED INTERSECTION SUMMARY

	Eastbound			Westbound			Northbound			Southbound		
	L	T	R	L	T	R	L	T	R	L	T	R
No. Lanes	0	2	0	0	1	0	1	1	0	1	1	0
LGConfig		LTR			LTR		L	TR		L	TR	
Volume	62	35	195	119	22	31	88	497	88	21	409	27
Lane Width		3.6			3.6		3.6	3.6		3.6	3.6	
RTOR Vol			0			0			0			0

Duration 0.25 Area Type: All other areas

Signal Operations

Phase Combination	1	2	3	4	5	6	7	8
EB Left	A				NB Left	A		
Thru	A				Thru	A		
Right	A				Right	A		
Peds	X				Peds	X		
WB Left	A				SB Left	A		
Thru	A				Thru	A		
Right	A				Right	A		
Peds	X				Peds	X		
NB Right					EB Right			
SB Right					WB Right			
Green	17.8				30.2			
Yellow	4.0				4.0			
All Red	2.0				2.0			

Cycle Length: 60.0 secs

Intersection Performance Summary

Appr/ Lane Grp	Lane Group Capacity	Adj Sat Flow Rate (s)	Ratios v/c	Ratios g/C	Lane Group Delay	Lane Group LOS	Approach Delay	Approach LOS
Eastbound								
LTR	709	2390	0.42	0.30	17.4	B	17.4	B
Westbound								
LTR	273	919	0.64	0.30	23.3	C	23.3	C
Northbound								
L	411	817	0.22	0.50	8.6	A		
TR	903	1794	0.66	0.50	12.9	B	12.3	B
Southbound								
L	235	467	0.09	0.50	7.9	A		
TR	899	1787	0.49	0.50	10.3	B	10.2	B

Intersection Delay = 13.8 (sec/veh) Intersection LOS = B

Sum of flow ratios for critical lane groups, Yc = Sum (v/s) = 0.52
Total lost time per cycle, L = 12.00 sec
Critical flow rate to capacity ratio, Xc = (Yc)(C)/(C-L) = 0.65

HCS2000: Signalized Intersections Release 4.1d

Analyst: J.M. Mark
Agency: Mark Engineering
Date: 9/16/2009
Period: Saturday Peak Hour
Project ID: Fenelon Falls TIS - A20BS
E/W St: Francis Street

Inter.: Colborne St. & Francis St.
Area Type: All other areas
Jurisd: City of Kawartha Lakes
Year: 2020 Background Traffic
N/S St: Colborne Street

SIGNALIZED INTERSECTION SUMMARY

	Eastbound			Westbound			Northbound			Southbound		
	L	T	R	L	T	R	L	T	R	L	T	R
No. Lanes	0	2	0	0	1	0	1	1	0	1	1	0
LGConfig		LTR			LTR		L	TR		L	TR	
Volume	77	32	201	143	36	27	86	681	107	12	619	19
Lane Width		3.6			3.6		3.6	3.6		3.6	3.6	
RTOR Vol			0			0			0			0

Duration 0.25 Area Type: All other areas

Signal Operations

Phase Combination	1	2	3	4	5	6	7	8
EB Left	A				NB Left	A		
Thru	A				Thru	A		
Right	A				Right	A		
Peds	X				Peds	X		
WB Left	A				SB Left	A		
Thru	A				Thru	A		
Right	A				Right	A		
Peds	X				Peds	X		
NB Right					EB Right			
SB Right					WB Right			
Green	17.0				31.0			
Yellow	4.0				4.0			
All Red	2.0				2.0			

Cycle Length: 60.0 secs

Intersection Performance Summary

Appr/ Lane Grp	Lane Group Capacity	Adj Sat Flow Rate (s)	Ratios v/c	Ratios g/C	Lane Group Delay	Lane Group LOS	Approach Delay	Approach LOS
Eastbound								
LTR	684	2414	0.46	0.28	18.2	B	18.2	B
Westbound								
LTR	256	905	0.82	0.28	39.3	D	39.3	D
Northbound								
L	266	514	0.33	0.52	9.2	A		
TR	951	1841	0.85	0.52	19.6	B	18.5	B
Southbound								
L	153	297	0.08	0.52	7.5	A		
TR	966	1870	0.67	0.52	12.6	B	12.5	B

Intersection Delay = 18.7 (sec/veh) Intersection LOS = B

Sum of flow ratios for critical lane groups, Yc = Sum (v/s) = 0.67
Total lost time per cycle, L = 12.00 sec
Critical flow rate to capacity ratio, Xc = (Yc)(C)/(C-L) = 0.84

HCS2000: Signalized Intersections Release 4.1d

Analyst: J.M. Mark
Agency: Mark Engineering
Date: 9/16/2009
Period: Weekday Peak Hour
Project ID: Fenelon Falls TIS - A20TPb Add WBL
E/W St: Francis Street

Inter.: Colborne St. & Francis St.
Area Type: All other areas
Jurisd: City of Kawartha Lakes
Year: 2020 Total Traffic
N/S St: Colborne Street

SIGNALIZED INTERSECTION SUMMARY

	Eastbound			Westbound			Northbound			Southbound		
	L	T	R	L	T	R	L	T	R	L	T	R
No. Lanes	0	1	1	0	1	0	1	1	0	1	1	0
LGConfig		LT	R		LTR		L	TR		L	TR	
Volume	62	35	257	160	22	31	115	685	115	21	516	27
Lane Width		3.6	3.6		3.6		3.6	3.6		3.6	3.6	
RTOR Vol			0			0			0			0

Duration 0.25 Area Type: All other areas

Signal Operations

Phase Combination	1	2	3	4		5	6	7	8
EB Left		A			NB Left	A	A		
Thru		A			Thru	A	A		
Right		A			Right	A	A		
Peds		X			Peds		X		
WB Left	A	A			SB Left		A		
Thru	A	A			Thru		A		
Right	A	A			Right		A		
Peds		X			Peds		X		
NB Right					EB Right				
SB Right					WB Right				
Green	4.0	23.7				4.0	40.3		
Yellow	3.0	4.0				3.0	4.0		
All Red	0.0	2.0				0.0	2.0		

Cycle Length: 90.0 secs

Intersection Performance Summary

Appr/ Lane Grp	Lane Group Capacity	Adj Sat Flow Rate (s)	Ratios v/c	Ratios g/C	Lane Group Delay	Lane Group LOS	Approach Delay	Approach LOS
Eastbound								
LT	315	1196	0.31	0.26	27.2	C	42.5	D
R	315	1195	0.83	0.26	48.3	D		
Westbound								
LTR	304	1475	0.71	0.34	33.5	C	33.5	C
Northbound								
L	279	1773	0.42	0.53	15.0	B		
TR	935	1779	0.87	0.53	27.8	C	26.2	C
Southbound								
L	106	237	0.20	0.45	16.0	B		
TR	802	1791	0.69	0.45	22.5	C	22.2	C

Intersection Delay = 28.7 (sec/veh) Intersection LOS = C

Sum of flow ratios for critical lane groups, Yc = Sum (v/s) = 0.72
Total lost time per cycle, L = 18.00 sec
Critical flow rate to capacity ratio, Xc = (Yc)(C)/(C-L) = 0.90

HCS2000: Signalized Intersections Release 4.1d

Analyst: J.M. Mark
Agency: Mark Engineering
Date: 11/17/2009
Period: Saturday Inbound Peak Hour
Project ID: Fenelon Falls TIS - A20TSb EB CL to EB RTL, Add WBL
E/W St: Francis Street

Inter.: Colborne St. & Francis St.
Area Type: All other areas
Jurisd: City of Kawartha Lakes
Year: 2020 Total Traffic
N/S St: Colborne Street

SIGNALIZED INTERSECTION SUMMARY

	Eastbound			Westbound			Northbound			Southbound		
	L	T	R	L	T	R	L	T	R	L	T	R
No. Lanes	0	1	1	1	1	0	1	1	0	1	1	0
LGConfig		LT	R	L	TR		L	TR		L	TR	
Volume	77	32	265	207	36	27	102	795	123	12	814	19
Lane Width		3.6	3.6	3.6	3.6		3.6	3.6		3.6	3.6	
RTOR Vol			0			0			0			0

Duration 0.25 Area Type: All other areas

Signal Operations

Phase Combination	1	2	3	4		5	6	7	8
EB Left		A			NB Left	A	A		
Thru		A			Thru	A	A		
Right		A			Right	A	A		
Peds		X			Peds		X		
WB Left	A	A			SB Left		A		
Thru	A	A			Thru		A		
Right	A	A			Right		A		
Peds		X			Peds		X		
NB Right					EB Right				
SB Right					WB Right				
Green	2.2	31.5				4.9	63.4		
Yellow	3.0	4.0				3.0	4.0		
All Red	0.0	2.0				0.0	2.0		

Cycle Length: 120.0 secs

Intersection Performance Summary

Appr/ Lane Grp	Lane Group Capacity	Adj Sat Flow Rate (s)	Ratios v/c	Ratios g/C	Lane Group Delay	Lane Group LOS	Approach Delay	Approach LOS
Eastbound								
LT	333	1268	0.37	0.26	36.8	D	61.7	E
R	322	1228	0.91	0.26	72.0	E		
Westbound								
L	244	1510	0.94	0.31	87.4	F		
TR	495	1617	0.14	0.31	30.4	C	74.1	E
Northbound								
L	136	1787	0.83	0.59	60.4	E		
TR	1088	1831	0.94	0.59	37.0	D	39.3	D
Southbound								
L	63	119	0.21	0.53	16.6	B		
TR	989	1872	0.94	0.53	41.8	D	41.5	D

Intersection Delay = 47.1 (sec/veh) Intersection LOS = D

Sum of flow ratios for critical lane groups, Yc = Sum (v/s) = 0.84
Total lost time per cycle, L = 12.00 sec
Critical flow rate to capacity ratio, Xc = (Yc)(C)/(C-L) = 0.94

HCS2000: Signalized Intersections Release 4.1d

Analyst: J.M. Mark | Inter.: Colborne St. & Francis St.
Agency: Mark Engineering | Area Type: All other areas
Date: 11/17/2009 | Jurisd: City of Kawartha Lakes
Period: Saturday Outbound Peak Hour | Year: 2020 Total Traffic
Project ID: Fenelon Falls TIS - A20TTb EB CL to EB RTL Add WBL
E/W St: Francis Street | N/S St: Colborne Street

SIGNALIZED INTERSECTION SUMMARY

	Eastbound			Westbound			Northbound			Southbound		
	L	T	R	L	T	R	L	T	R	L	T	R
No. Lanes	0	1	1	1	1	0	1	1	0	1	1	0
LGConfig		LT	R	L	TR		L	TR		L	TR	
Volume	77	32	238	177	36	27	124	947	145	12	721	19
Lane Width		3.6	3.6	3.6	3.6		3.6	3.6		3.6	3.6	
RTOR Vol			0			0			0			0

Duration 0.25 Area Type: All other areas

Signal Operations

Phase Combination	1	2	3	4		5	6	7	8
EB Left		A			NB Left	A	A		
Thru		A			Thru	A	A		
Right		A			Right	A	A		
Peds		X			Peds		X		
WB Left	A	A			SB Left		A		
Thru	A	A			Thru		A		
Right	A	A			Right		A		
Peds		X			Peds		X		
NB Right					EB Right				
SB Right					WB Right				
Green	3.2	26.7				3.6	68.5		
Yellow	3.0	4.0				3.0	4.0		
All Red	0.0	2.0				0.0	2.0		

Cycle Length: 120.0 secs

Intersection Performance Summary

Appr/ Lane Grp	Lane Group Capacity	Adj Sat Flow Rate (s)	Ratios v/c	Ratios g/C	Lane Group Delay	Lane Group LOS	Approach Delay	Approach LOS
Eastbound								
LT	277	1245	0.39	0.22	40.7	D	68.7	E
R	258	1161	0.92	0.22	81.6	F		
Westbound								
L	211	1460	0.84	0.27	70.1	E		
TR	437	1595	0.14	0.27	33.1	C	60.4	E
Northbound								
L	266	1775	0.47	0.63	16.8	B		
TR	1148	1834	0.95	0.63	37.0	D	34.9	C
Southbound								
L	62	109	0.19	0.57	14.0	B		
TR	1068	1871	0.69	0.57	20.2	C	20.1	C

Intersection Delay = 37.6 (sec/veh) Intersection LOS = D

Sum of flow ratios for critical lane groups, Yc = Sum (v/s) = 0.83
Total lost time per cycle, L = 18.00 sec
Critical flow rate to capacity ratio, Xc = (Yc)(C)/(C-L) = 0.97

HCS2000: Unsignalized Intersections Release 4.1d

TWO-WAY STOP CONTROL SUMMARY

Analyst: J.M. Mark
Agency/Co.: Mark Engineering
Date Performed: 9/16/2009
Analysis Time Period: Weekday Peak Hour
Intersection: Colborne St. & Water St.
Jurisdiction: City of Kawartha Lakes
Units: U. S. Metric
Analysis Year: 2010 Background Traffic
Project ID: Fenelon Falls TIS - B10BP
East/West Street: Water Street/Oak Street
North/South Street: Colborne Street
Intersection Orientation: NS Study period (hrs): 0.25

Vehicle Volumes and Adjustments

Major Street: Approach	Northbound			Southbound		
Movement	1	2	3	4	5	6
	L	T	R	L	T	R
Volume	84	553	3	0	555	42
Peak-Hour Factor, PHF	0.95	0.95	0.95	0.95	0.95	0.95
Hourly Flow Rate, HFR	88	582	3	0	584	44
Percent Heavy Vehicles	0	--	--	0	--	--
Median Type/Storage	Undivided /					
RT Channelized?						
Lanes	1	1	0	0	1	0
Configuration	L	TR		LTR		
Upstream Signal?		No			No	

Minor Street: Approach	Westbound			Eastbound		
Movement	7	8	9	10	11	12
	L	T	R	L	T	R
Volume	0	0	1			
Peak Hour Factor, PHF	0.95	0.95	0.95			
Hourly Flow Rate, HFR	0	0	1			
Percent Heavy Vehicles	0	0	0			
Percent Grade (%)		0			0	
Flared Approach: Exists?/Storage		No /			/	
Lanes	0	1	0			
Configuration		LTR				

Delay, Queue Length, and Level of Service

Approach	NB	SB	Westbound			Eastbound		
Movement	1	4	7	8	9	10	11	12
Lane Config	L	LTR		LTR				
v (vph)	88	0		1				
C(m) (vph)	877	967		445				
v/c	0.10	0.00		0.00				
95% queue length	0.33	0.00		0.01				
Control Delay	9.6	8.7		13.1				
LOS	A	A		B				
Approach Delay				13.1				
Approach LOS				B				

HCS2000: Unsignalized Intersections Release 4.1d

TWO-WAY STOP CONTROL SUMMARY

Analyst: J.M. Mark
Agency/Co.: Mark Engineering
Date Performed: 9/16/2009
Analysis Time Period: Saturday Peak Hour
Intersection: Colborne St. & Water St.
Jurisdiction: City of Kawartha Lakes
Units: U. S. Metric
Analysis Year: 2010 Background Traffic
Project ID: Fenelon Falls TIS - B10BS
East/West Street: Water Street/Oak Street
North/South Street: Colborne Street
Intersection Orientation: NS Study period (hrs): 0.25

Vehicle Volumes and Adjustments

Major Street: Approach	Northbound			Southbound		
Movement	1	2	3	4	5	6
	L	T	R	L	T	R
Volume	121	751	3	4	742	50
Peak-Hour Factor, PHF	0.95	0.95	0.95	0.95	0.95	0.95
Hourly Flow Rate, HFR	127	790	3	4	781	52
Percent Heavy Vehicles	0	--	--	0	--	--
Median Type/Storage	Undivided /					
RT Channelized?						
Lanes	1	1	0	0	1	0
Configuration	L	TR		LTR		
Upstream Signal?	No			No		

Minor Street: Approach	Westbound			Eastbound		
Movement	7	8	9	10	11	12
	L	T	R	L	T	R
Volume	1	0	0			
Peak Hour Factor, PHF	0.95	0.95	0.95			
Hourly Flow Rate, HFR	1	0	0			
Percent Heavy Vehicles	0	0	0			
Percent Grade (%)		0			0	
Flared Approach: Exists?/Storage		No /			/	
Lanes	0	1	0			
Configuration		LTR				

Delay, Queue Length, and Level of Service

Approach	NB	SB	Westbound			Eastbound		
Movement	1	4	7	8	9	10	11	12
Lane Config	L	LTR		LTR				
v (vph)	127	4		1				
C(m) (vph)	745	790		47				
v/c	0.17	0.01		0.02				
95% queue length	0.61	0.02		0.06				
Control Delay	10.8	9.6		83.3				
LOS	B	A		F				
Approach Delay				83.3				
Approach LOS				F				

HCS2000: Unsignalized Intersections Release 4.1d

TWO-WAY STOP CONTROL SUMMARY

Analyst: J.M. Mark
Agency/Co.: Mark Engineering
Date Performed: 11/17/2009
Analysis Time Period: Weekday Peak Hour
Intersection: Colborne St. & Water St.
Jurisdiction: City of Kawartha Lakes
Units: U. S. Metric
Analysis Year: 2010 Total Traffic
Project ID: Fenelon Falls TIS - B10TP
East/West Street: Water Street/Oak Street
North/South Street: Colborne Street
Intersection Orientation: NS Study period (hrs): 0.25

Vehicle Volumes and Adjustments

Major Street: Approach	Northbound			Southbound		
Movement	1	2	3	4	5	6
	L	T	R	L	T	R
Volume	111	795	3	0	765	42
Peak-Hour Factor, PHF	0.95	0.95	0.95	0.95	0.95	0.95
Hourly Flow Rate, HFR	116	836	3	0	805	44
Percent Heavy Vehicles	0	--	--	0	--	--
Median Type/Storage	Undivided /					
RT Channelized?						
Lanes	1	1	0	0	1	0
Configuration	L	TR		LTR		
Upstream Signal?	No			No		

Minor Street: Approach	Westbound			Eastbound		
Movement	7	8	9	10	11	12
	L	T	R	L	T	R
Volume	0	0	1			
Peak Hour Factor, PHF	0.95	0.95	0.95			
Hourly Flow Rate, HFR	0	0	1			
Percent Heavy Vehicles	0	0	0			
Percent Grade (%)		0			0	
Flared Approach: Exists?/Storage		No /			/	
Lanes	0	1	0			
Configuration		LTR				

Delay, Queue Length, and Level of Service

Approach	NB	SB	Westbound			Eastbound		
Movement	1	4	7	8	9	10	11	12
Lane Config	L	LTR		LTR				
v (vph)	116	0		1				
C(m) (vph)	726	778		318				
v/c	0.16	0.00		0.00				
95% queue length	0.57	0.00		0.01				
Control Delay	10.9	9.6		16.4				
LOS	B	A		C				
Approach Delay				16.4				
Approach LOS				C				

HCS2000: Unsignalized Intersections Release 4.1d

TWO-WAY STOP CONTROL SUMMARY

Analyst: J.M. Mark
Agency/Co.: Mark Engineering
Date Performed: 11/17/2009
Analysis Time Period: Saturday Inbound Peak Hour
Intersection: Colborne St. & Water St.
Jurisdiction: City of Kawartha Lakes
Units: U. S. Metric
Analysis Year: 2010 Total Traffic
Project ID: Fenelon Falls TIS - B10TS
East/West Street: Water Street/Oak Street
North/South Street: Colborne Street
Intersection Orientation: NS Study period (hrs): 0.25

Vehicle Volumes and Adjustments

Major Street: Approach	Northbound			Southbound		
Movement	1	2	3	4	5	6
	L	T	R	L	T	R
Volume	137	897	3	4	1065	50
Peak-Hour Factor, PHF	0.95	0.95	0.95	0.95	0.95	0.95
Hourly Flow Rate, HFR	144	944	3	4	1121	52
Percent Heavy Vehicles	0	--	--	0	--	--
Median Type/Storage	Undivided /					
RT Channelized?						
Lanes	1	1	0	0	1	0
Configuration	L	TR		LTR		
Upstream Signal?		No			No	

Minor Street: Approach	Westbound			Eastbound		
Movement	7	8	9	10	11	12
	L	T	R	L	T	R
Volume	1	0	0			
Peak Hour Factor, PHF	0.95	0.95	0.95			
Hourly Flow Rate, HFR	1	0	0			
Percent Heavy Vehicles	0	0	0			
Percent Grade (%)		0			0	
Flared Approach: Exists?/Storage		No /			/	
Lanes	0	1	0			
Configuration		LTR				

Delay, Queue Length, and Level of Service

Approach	NB	SB	Westbound			Eastbound		
Movement	1	4	7	8	9	10	11	12
Lane Config	L	LTR		LTR				
v (vph)	144	4		1				
C(m) (vph)	555	692		19				
v/c	0.26	0.01		0.05				
95% queue length	1.03	0.02		0.16				
Control Delay	13.7	10.2		204.8				
LOS	B	B		F				
Approach Delay				204.8				
Approach LOS				F				

HCS2000: Unsignalized Intersections Release 4.1d

TWO-WAY STOP CONTROL SUMMARY

Analyst: J.M. Mark
Agency/Co.: Mark Engineering
Date Performed: 11/17/2009
Analysis Time Period: Saturday Outbound Peak Hour
Intersection: Colborne St. & Water St.
Jurisdiction: City of Kawartha Lakes
Units: U. S. Metric
Analysis Year: 2010 Total Traffic
Project ID: Fenelon Falls TIS - B10TT
East/West Street: Water Street/Oak Street
North/South Street: Colborne Street
Intersection Orientation: NS Study period (hrs): 0.25

Vehicle Volumes and Adjustments

Major Street: Approach	Northbound			Southbound		
Movement	1	2	3	4	5	6
	L	T	R	L	T	R
Volume	159	1093	3	4	915	50
Peak-Hour Factor, PHF	0.95	0.95	0.95	0.95	0.95	0.95
Hourly Flow Rate, HFR	167	1150	3	4	963	52
Percent Heavy Vehicles	0	--	--	0	--	--
Median Type/Storage	Undivided /					
RT Channelized?						
Lanes	1	1	0	0	1	0
Configuration	L	TR		LTR		
Upstream Signal?		No			No	

Minor Street: Approach	Westbound			Eastbound		
Movement	7	8	9	10	11	12
	L	T	R	L	T	R
Volume	1	0	0			
Peak Hour Factor, PHF	0.95	0.95	0.95			
Hourly Flow Rate, HFR	1	0	0			
Percent Heavy Vehicles	0	0	0			
Percent Grade (%)		0			0	
Flared Approach: Exists?/Storage		No /			/	
Lanes	0	1	0			
Configuration		LTR				

Delay, Queue Length, and Level of Service

Approach	NB	SB	Westbound			Eastbound		
Movement	1	4	7	8	9	10	11	12
Lane Config	L	LTR		LTR				
v (vph)	167	4		1				
C(m) (vph)	636	578		17				
v/c	0.26	0.01		0.06				
95% queue length	1.05	0.02		0.17				
Control Delay	12.7	11.3		229.6				
LOS	B	B		F				
Approach Delay				229.6				
Approach LOS				F				

HCS2000: Unsignalized Intersections Release 4.1d

TWO-WAY STOP CONTROL SUMMARY

Analyst: J.M. Mark
Agency/Co.: Mark Engineering
Date Performed: 9/16/2009
Analysis Time Period: Weekday Peak Hour
Intersection: Colborne St. & Water St.
Jurisdiction: City of Kawartha Lakes
Units: U. S. Metric
Analysis Year: 2015 Background Traffic
Project ID: Fenelon Falls TIS - B15BP
East/West Street: Water Street/Oak Street
North/South Street: Colborne Street
Intersection Orientation: NS Study period (hrs): 0.25

Vehicle Volumes and Adjustments

Major Street: Approach	Northbound			Southbound		
Movement	1	2	3	4	5	6
	L	T	R	L	T	R
Volume	92	610	3	0	613	46
Peak-Hour Factor, PHF	0.95	0.95	0.95	0.95	0.95	0.95
Hourly Flow Rate, HFR	96	642	3	0	645	48
Percent Heavy Vehicles	0	--	--	0	--	--
Median Type/Storage	Undivided /					
RT Channelized?						
Lanes	1	1	0	0	1	0
Configuration	L	TR		LTR		
Upstream Signal?	No			No		

Minor Street: Approach	Westbound			Eastbound		
Movement	7	8	9	10	11	12
	L	T	R	L	T	R
Volume	0	0	1			
Peak Hour Factor, PHF	0.95	0.95	0.95			
Hourly Flow Rate, HFR	0	0	1			
Percent Heavy Vehicles	0	0	0			
Percent Grade (%)		0			0	
Flared Approach: Exists?/Storage		No /			/	
Lanes	0	1	0			
Configuration		LTR				

Delay, Queue Length, and Level of Service

Approach	NB	SB	Westbound			Eastbound		
Movement	1	4	7	8	9	10	11	12
Lane Config	L	LTR		LTR				
v (vph)	96	0		1				
C(m) (vph)	821	913		404				
v/c	0.12	0.00		0.00				
95% queue length	0.40	0.00		0.01				
Control Delay	10.0-	8.9		13.9				
LOS	A	A		B				
Approach Delay				13.9				
Approach LOS				B				

HCS2000: Unsignalized Intersections Release 4.1d

TWO-WAY STOP CONTROL SUMMARY

Analyst: J.M. Mark
Agency/Co.: Mark Engineering
Date Performed: 9/16/2009
Analysis Time Period: Saturday Peak Hour
Intersection: Colborne St. & Water St.
Jurisdiction: City of Kawartha Lakes
Units: U. S. Metric
Analysis Year: 2015 Background Traffic
Project ID: Fenelon Falls TIS - B15BS
East/West Street: Water Street/Oak Street
North/South Street: Colborne Street
Intersection Orientation: NS Study period (hrs): 0.25

Vehicle Volumes and Adjustments

Major Street: Approach	Northbound			Southbound		
Movement	1	2	3	4	5	6
	L	T	R	L	T	R
Volume	134	829	3	4	819	55
Peak-Hour Factor, PHF	0.95	0.95	0.95	0.95	0.95	0.95
Hourly Flow Rate, HFR	141	872	3	4	862	57
Percent Heavy Vehicles	0	--	--	0	--	--
Median Type/Storage	Undivided /					
RT Channelized?						
Lanes	1	1	0	0	1	0
Configuration	L	TR		LTR		
Upstream Signal?		No			No	

Minor Street: Approach	Westbound			Eastbound		
Movement	7	8	9	10	11	12
	L	T	R	L	T	R
Volume	1	0	0			
Peak Hour Factor, PHF	0.95	0.95	0.95			
Hourly Flow Rate, HFR	1	0	0			
Percent Heavy Vehicles	0	0	0			
Percent Grade (%)		0			0	
Flared Approach: Exists?/Storage		No /			/	
Lanes	0	1	0			
Configuration		LTR				

Delay, Queue Length, and Level of Service

Approach	NB	SB	Westbound			Eastbound		
Movement	1	4	7	8	9	10	11	12
Lane Config	L	LTR		LTR				
v (vph)	141	4		1				
C(m) (vph)	685	732		33				
v/c	0.21	0.01		0.03				
95% queue length	0.77	0.02		0.09				
Control Delay	11.6	9.9		117.5				
LOS	B	A		F				
Approach Delay				117.5				
Approach LOS				F				

HCS2000: Unsignalized Intersections Release 4.1d

TWO-WAY STOP CONTROL SUMMARY

Analyst: J.M. Mark
Agency/Co.: Mark Engineering
Date Performed: 11/17/2009
Analysis Time Period: Weekday Peak Hour
Intersection: Colborne St. & Water St.
Jurisdiction: City of Kawartha Lakes
Units: U. S. Metric
Analysis Year: 2015 Total Traffic
Project ID: Fenelon Falls TIS - B15TP
East/West Street: Water Street/Oak Street
North/South Street: Colborne Street
Intersection Orientation: NS Study period (hrs): 0.25

Vehicle Volumes and Adjustments

Major Street: Approach	Northbound			Southbound		
Movement	1	2	3	4	5	6
	L	T	R	L	T	R
Volume	119	852	3	0	823	46
Peak-Hour Factor, PHF	0.95	0.95	0.95	0.95	0.95	0.95
Hourly Flow Rate, HFR	125	896	3	0	866	48
Percent Heavy Vehicles	0	--	--	0	--	--
Median Type/Storage	Undivided /					
RT Channelized?						
Lanes	1	1	0	0	1	0
Configuration	L	TR		LTR		
Upstream Signal?		No			No	

Minor Street: Approach	Westbound			Eastbound		
Movement	7	8	9	10	11	12
	L	T	R	L	T	R
Volume	0	0	1			
Peak Hour Factor, PHF	0.95	0.95	0.95			
Hourly Flow Rate, HFR	0	0	1			
Percent Heavy Vehicles	0	0	0			
Percent Grade (%)		0			0	
Flared Approach: Exists?/Storage		No /			/	
Lanes	0	1	0			
Configuration		LTR				

Delay, Queue Length, and Level of Service

Approach	NB	SB	Westbound			Eastbound		
Movement	1	4	7	8	9	10	11	12
Lane Config	L	LTR		LTR				
v (vph)	125	0		1				
C(m) (vph)	680	735		289				
v/c	0.18	0.00		0.00				
95% queue length	0.67	0.00		0.01				
Control Delay	11.5	9.9		17.5				
LOS	B	A		C				
Approach Delay				17.5				
Approach LOS				C				

HCS2000: Unsignalized Intersections Release 4.1d

TWO-WAY STOP CONTROL SUMMARY

Analyst: J.M. Mark
Agency/Co.: Mark Engineering
Date Performed: 11/17/2009
Analysis Time Period: Saturday Inbound Peak Hour
Intersection: Colborne St. & Water St.
Jurisdiction: City of Kawartha Lakes
Units: U. S. Metric
Analysis Year: 2015 Total Traffic
Project ID: Fenelon Falls TIS - B15TS
East/West Street: Water Street/Oak Street
North/South Street: Colborne Street
Intersection Orientation: NS Study period (hrs): 0.25

Vehicle Volumes and Adjustments

Major Street: Approach	Northbound			Southbound		
Movement	1	2	3	4	5	6
	L	T	R	L	T	R
Volume	150	975	3	5	1142	55
Peak-Hour Factor, PHF	0.95	0.95	0.95	0.95	0.95	0.95
Hourly Flow Rate, HFR	157	1026	3	5	1202	57
Percent Heavy Vehicles	0	--	--	0	--	--
Median Type/Storage	Undivided /					
RT Channelized?						
Lanes	1	1	0	0	1	0
Configuration	L	TR		LTR		
Upstream Signal?		No			No	

Minor Street: Approach	Westbound			Eastbound		
Movement	7	8	9	10	11	12
	L	T	R	L	T	R
Volume	1	0	0			
Peak Hour Factor, PHF	0.95	0.95	0.95			
Hourly Flow Rate, HFR	1	0	0			
Percent Heavy Vehicles	0	0	0			
Percent Grade (%)		0			0	
Flared Approach: Exists?/Storage		No /			/	
Lanes	0	1	0			
Configuration		LTR				

Delay, Queue Length, and Level of Service

Approach	NB	SB	Westbound			Eastbound		
Movement	1	4	7	8	9	10	11	12
Lane Config	L	LTR		LTR				
v (vph)	157	5		1				
C(m) (vph)	510	641		13				
v/c	0.31	0.01		0.08				
95% queue length	1.30	0.02		0.22				
Control Delay	15.2	10.7		303.8				
LOS	C	B		F				
Approach Delay				303.8				
Approach LOS				F				

HCS2000: Unsignalized Intersections Release 4.1d

TWO-WAY STOP CONTROL SUMMARY

Analyst: J.M. Mark
Agency/Co.: Mark Engineering
Date Performed: 11/17/2009
Analysis Time Period: Saturday Outbound Peak Hour
Intersection: Colborne St. & Water St.
Jurisdiction: City of Kawartha Lakes
Units: U. S. Metric
Analysis Year: 2015 Total Traffic
Project ID: Fenelon Falls TIS - B15TT
East/West Street: Water Street/Oak Street
North/South Street: Colborne Street
Intersection Orientation: NS Study period (hrs): 0.25

Vehicle Volumes and Adjustments

Major Street: Approach	Northbound			Southbound		
Movement	1	2	3	4	5	6
	L	T	R	L	T	R
Volume	172	1171	3	5	992	55
Peak-Hour Factor, PHF	0.95	0.95	0.95	0.95	0.95	0.95
Hourly Flow Rate, HFR	181	1232	3	5	1044	57
Percent Heavy Vehicles	0	--	--	0	--	--
Median Type/Storage	Undivided /					
RT Channelized?						
Lanes	1	1	0	0	1	0
Configuration	L	TR		LTR		
Upstream Signal?		No			No	

Minor Street: Approach	Westbound			Eastbound		
Movement	7	8	9	10	11	12
	L	T	R	L	T	R
Volume	1	0	0			
Peak Hour Factor, PHF	0.95	0.95	0.95			
Hourly Flow Rate, HFR	1	0	0			
Percent Heavy Vehicles	0	0	0			
Percent Grade (%)		0			0	
Flared Approach: Exists?/Storage		No /			/	
Lanes	0	1	0			
Configuration		LTR				

Delay, Queue Length, and Level of Service

Approach	NB	SB	Westbound			Eastbound		
Movement	1	4	7	8	9	10	11	12
Lane Config	L	LTR		LTR				
v (vph)	181	5		1				
C(m) (vph)	586	536		11				
v/c	0.31	0.01		0.09				
95% queue length	1.31	0.03		0.25				
Control Delay	13.9	11.8		362.7				
LOS	B	B		F				
Approach Delay				362.7				
Approach LOS				F				

HCS2000: Unsignalized Intersections Release 4.1d

TWO-WAY STOP CONTROL SUMMARY

Analyst: J.M. Mark
Agency/Co.: Mark Engineering
Date Performed: 9/16/2009
Analysis Time Period: Weekday Peak Hour
Intersection: Colborne St. & Water St.
Jurisdiction: City of Kawartha Lakes
Units: U. S. Metric
Analysis Year: 2020 Background Traffic
Project ID: Fenelon Falls TIS - B20BP
East/West Street: Water Street/Oak Street
North/South Street: Colborne Street
Intersection Orientation: NS Study period (hrs): 0.25

Vehicle Volumes and Adjustments

Major Street: Approach	Northbound			Southbound		
Movement	1	2	3	4	5	6
	L	T	R	L	T	R
Volume	102	674	4	0	676	51
Peak-Hour Factor, PHF	0.95	0.95	0.95	0.95	0.95	0.95
Hourly Flow Rate, HFR	107	709	4	0	711	53
Percent Heavy Vehicles	0	--	--	0	--	--
Median Type/Storage	Undivided /					
RT Channelized?						
Lanes	1	1	0	0	1	0
Configuration	L	TR		LTR		
Upstream Signal?	No			No		

Minor Street: Approach	Westbound			Eastbound		
Movement	7	8	9	10	11	12
	L	T	R	L	T	R
Volume	0	0	1			
Peak Hour Factor, PHF	0.95	0.95	0.95			
Hourly Flow Rate, HFR	0	0	1			
Percent Heavy Vehicles	0	0	0			
Percent Grade (%)		0			0	
Flared Approach: Exists?/Storage		No /			/	
Lanes	0	1	0			
Configuration		LTR				

Delay, Queue Length, and Level of Service

Approach	NB	SB	Westbound			Eastbound		
Movement	1	4	7	8	9	10	11	12
Lane Config	L	LTR		LTR				
v (vph)	107	0		1				
C(m) (vph)	765	859		364				
v/c	0.14	0.00		0.00				
95% queue length	0.48	0.00		0.01				
Control Delay	10.5	9.2		14.9				
LOS	B	A		B				
Approach Delay				14.9				
Approach LOS				B				

HCS2000: Unsignalized Intersections Release 4.1d

TWO-WAY STOP CONTROL SUMMARY

Analyst: J.M. Mark
Agency/Co.: Mark Engineering
Date Performed: 9/16/2009
Analysis Time Period: Saturday Peak Hour
Intersection: Colborne St. & Water St.
Jurisdiction: City of Kawartha Lakes
Units: U. S. Metric
Analysis Year: 2020 Background Traffic
Project ID: Fenelon Falls TIS - B20BS
East/West Street: Water Street/Oak Street
North/South Street: Colborne Street
Intersection Orientation: NS Study period (hrs): 0.25

Vehicle Volumes and Adjustments

Major Street: Approach	Northbound			Southbound		
Movement	1	2	3	4	5	6
	L	T	R	L	T	R
Volume	148	915	4	5	904	61
Peak-Hour Factor, PHF	0.95	0.95	0.95	0.95	0.95	0.95
Hourly Flow Rate, HFR	155	963	4	5	951	64
Percent Heavy Vehicles	0	--	--	0	--	--
Median Type/Storage	Undivided /					
RT Channelized?						
Lanes	1	1	0	0	1	0
Configuration	L	TR		LTR		
Upstream Signal?	No			No		

Minor Street: Approach	Westbound			Eastbound		
Movement	7	8	9	10	11	12
	L	T	R	L	T	R
Volume	1	0	0			
Peak Hour Factor, PHF	0.95	0.95	0.95			
Hourly Flow Rate, HFR	1	0	0			
Percent Heavy Vehicles	0	0	0			
Percent Grade (%)		0			0	
Flared Approach: Exists?/Storage		No /			/	
Lanes	0	1	0			
Configuration		LTR				

Delay, Queue Length, and Level of Service

Approach	NB	SB	Westbound			Eastbound		
Movement	1	4	7	8	9	10	11	12
Lane Config	L	LTR		LTR				
v (vph)	155	5		1				
C(m) (vph)	625	671		21				
v/c	0.25	0.01		0.05				
95% queue length	0.97	0.02		0.14				
Control Delay	12.6	10.4		184.8				
LOS	B	B		F				
Approach Delay				184.8				
Approach LOS				F				

HCS2000: Unsignalized Intersections Release 4.1d

TWO-WAY STOP CONTROL SUMMARY

Analyst: J.M. Mark
Agency/Co.: Mark Engineering
Date Performed: 11/17/2009
Analysis Time Period: Weekday Peak Hour
Intersection: Colborne St. & Water St.
Jurisdiction: City of Kawartha Lakes
Units: U. S. Metric
Analysis Year: 2020 Total Traffic
Project ID: Fenelon Falls TIS - B20TP
East/West Street: Water Street/Oak Street
North/South Street: Colborne Street
Intersection Orientation: NS Study period (hrs): 0.25

Vehicle Volumes and Adjustments

Major Street: Approach	Northbound			Southbound		
Movement	1	2	3	4	5	6
	L	T	R	L	T	R
Volume	129	916	4	0	886	51
Peak-Hour Factor, PHF	0.95	0.95	0.95	0.95	0.95	0.95
Hourly Flow Rate, HFR	135	964	4	0	932	53
Percent Heavy Vehicles	0	--	--	0	--	--
Median Type/Storage	Undivided /					
RT Channelized?						
Lanes	1	1	0	0	1	0
Configuration	L	TR		LTR		
Upstream Signal?		No			No	

Minor Street: Approach	Westbound			Eastbound		
Movement	7	8	9	10	11	12
	L	T	R	L	T	R
Volume	0	0	1			
Peak Hour Factor, PHF	0.95	0.95	0.95			
Hourly Flow Rate, HFR	0	0	1			
Percent Heavy Vehicles	0	0	0			
Percent Grade (%)		0			0	
Flared Approach: Exists?/Storage		No /			/	
Lanes	0	1	0			
Configuration		LTR				

Delay, Queue Length, and Level of Service

Approach	NB	SB	Westbound			Eastbound		
Movement	1	4	7	8	9	10	11	12
Lane Config	L	LTR		LTR				
v (vph)	135	0		1				
C(m) (vph)	632	689		260				
v/c	0.21	0.00		0.00				
95% queue length	0.80	0.00		0.01				
Control Delay	12.2	10.2		18.9				
LOS	B	B		C				
Approach Delay				18.9				
Approach LOS				C				

HCS2000: Unsignalized Intersections Release 4.1d

TWO-WAY STOP CONTROL SUMMARY

Analyst: J.M. Mark
Agency/Co.: Mark Engineering
Date Performed: 11/17/2009
Analysis Time Period: Saturday Inbound Peak Hour
Intersection: Colborne St. & Water St.
Jurisdiction: City of Kawartha Lakes
Units: U. S. Metric
Analysis Year: 2020 Total Traffic
Project ID: Fenelon Falls TIS - B20TS
East/West Street: Water Street/Oak Street
North/South Street: Colborne Street
Intersection Orientation: NS Study period (hrs): 0.25

Vehicle Volumes and Adjustments

Major Street: Approach	Northbound			Southbound		
Movement	1	2	3	4	5	6
	L	T	R	L	T	R
Volume	164	1061	4	5	1227	61
Peak-Hour Factor, PHF	0.95	0.95	0.95	0.95	0.95	0.95
Hourly Flow Rate, HFR	172	1116	4	5	1291	64
Percent Heavy Vehicles	0	--	--	0	--	--
Median Type/Storage	Undivided /					
RT Channelized?						
Lanes	1	1	0	0	1	0
Configuration	L	TR		LTR		
Upstream Signal?	No			No		

Minor Street: Approach	Westbound			Eastbound		
Movement	7	8	9	10	11	12
	L	T	R	L	T	R
Volume	1	0	0			
Peak Hour Factor, PHF	0.95	0.95	0.95			
Hourly Flow Rate, HFR	1	0	0			
Percent Heavy Vehicles	0	0	0			
Percent Grade (%)		0			0	
Flared Approach: Exists?/Storage		No /			/	
Lanes	0	1	0			
Configuration		LTR				

Delay, Queue Length, and Level of Service

Approach	NB	SB	Westbound			Eastbound		
Movement	1	4	7	8	9	10	11	12
Lane Config	L	LTR		LTR				
v (vph)	172	5		1				
C(m) (vph)	465	588		8				
v/c	0.37	0.01		0.13				
95% queue length	1.68	0.03		0.32				
Control Delay	17.2	11.2		511.3				
LOS	C	B		F				
Approach Delay				511.3				
Approach LOS				F				

HCS2000: Unsignalized Intersections Release 4.1d

TWO-WAY STOP CONTROL SUMMARY

Analyst: J.M. Mark
Agency/Co.: Mark Engineering
Date Performed: 11/17/2009
Analysis Time Period: Saturday Outbound Peak Hour
Intersection: Colborne St. & Water St.
Jurisdiction: City of Kawartha Lakes
Units: U. S. Metric
Analysis Year: 2020 Total Traffic
Project ID: Fenelon Falls TIS - B20TT
East/West Street: Water Street/Oak Street
North/South Street: Colborne Street
Intersection Orientation: NS Study period (hrs): 0.25

Vehicle Volumes and Adjustments

Major Street: Approach	Northbound			Southbound		
Movement	1	2	3	4	5	6
	L	T	R	L	T	R
Volume	186	1257	4	5	1077	61
Peak-Hour Factor, PHF	0.95	0.95	0.95	0.95	0.95	0.95
Hourly Flow Rate, HFR	195	1323	4	5	1133	64
Percent Heavy Vehicles	0	--	--	0	--	--
Median Type/Storage	Undivided /					
RT Channelized?						
Lanes	1	1	0	0	1	0
Configuration	L	TR		LTR		
Upstream Signal?		No			No	

Minor Street: Approach	Westbound			Eastbound		
Movement	7	8	9	10	11	12
	L	T	R	L	T	R
Volume	1	0	0			
Peak Hour Factor, PHF	0.95	0.95	0.95			
Hourly Flow Rate, HFR	1	0	0			
Percent Heavy Vehicles	0	0	0			
Percent Grade (%)		0			0	
Flared Approach: Exists?/Storage		No /			/	
Lanes	0	1	0			
Configuration		LTR				

Delay, Queue Length, and Level of Service

Approach	NB	SB	Westbound			Eastbound		
Movement	1	4	7	8	9	10	11	12
Lane Config	L	LTR		LTR				
v (vph)	195	5		1				
C(m) (vph)	534	491		7				
v/c	0.37	0.01		0.14				
95% queue length	1.66	0.03		0.34				
Control Delay	15.6	12.4		591.5				
LOS	C	B		F				
Approach Delay				591.5				
Approach LOS				F				

HCS2000: Signalized Intersections Release 4.1d

Analyst: J.M. Mark
Agency: Mark Engineering
Date: 9/16/2009
Period: Weekday Peak Hour
Project ID: Fenelon Falls TIS - C10BP
E/W St: Helen Street/Plaza Access

Inter.: Lindsay St/Colborne St & Helen
Area Type: All other areas
Jurisd: City of Kawartha Lakes
Year: 2010 Background Traffic
N/S St: Colborne Street/Lindsay Street

SIGNALIZED INTERSECTION SUMMARY

	Eastbound			Westbound			Northbound			Southbound		
	L	T	R	L	T	R	L	T	R	L	T	R
No. Lanes	1	1	0	1	1	0	1	1	0	1	1	1
LGConfig	L	TR		L	TR		L	TR		L	T	R
Volume	158	28	51	43	55	153	50	328	67	100	309	144
Lane Width	3.6	3.6		3.6	3.6		3.6	3.6		3.6	3.6	3.6
RTOR Vol			0			0			0			0

Duration 0.25 Area Type: All other areas

Signal Operations

Phase Combination	1	2	3	4	5	6	7	8
EB Left	A				NB Left	A		
Thru	A				Thru	A		
Right	A				Right	A		
Peds	X				Peds	X		
WB Left	A				SB Left	A		
Thru	A				Thru	A		
Right	A				Right	A		
Peds	X				Peds	X		
NB Right					EB Right			
SB Right					WB Right			
Green	15.4				32.6			
Yellow	4.0				4.0			
All Red	2.0				2.0			

Cycle Length: 60.0 secs

Intersection Performance Summary

Appr/ Lane Grp	Lane Group Capacity	Adj Sat Flow Rate (s)	Ratios v/c	Ratios g/C	Lane Group Delay	Lane Group LOS	Approach Delay	Approach LOS
Eastbound								
L	287	1120	0.57	0.26	22.1	C		
TR	425	1656	0.19	0.26	17.7	B	20.6	C
Westbound								
L	326	1270	0.13	0.26	17.4	B		
TR	426	1658	0.50	0.26	20.0+	C	19.6	B
Northbound								
L	544	1002	0.10	0.54	6.7	A		
TR	983	1809	0.41	0.54	8.4	A	8.2	A
Southbound								
L	498	917	0.21	0.54	7.3	A		
T	1002	1845	0.32	0.54	7.7	A	7.5	A
R	770	1418	0.19	0.54	7.1	A		

Intersection Delay = 11.8 (sec/veh) Intersection LOS = B

Sum of flow ratios for critical lane groups, Yc = Sum (v/s) = 0.37
Total lost time per cycle, L = 12.00 sec
Critical flow rate to capacity ratio, Xc = (Yc)(C)/(C-L) = 0.46

HCS2000: Signalized Intersections Release 4.1d

Analyst: J.M. Mark
Agency: Mark Engineering
Date: 9/16/2009
Period: Saturday Peak Hour
Project ID: Fenelon Falls TIS - C10BS
E/W St: Helen Street/Plaza Access

Inter.: Lindsay St/Colborne St & Helen
Area Type: All other areas
Jurisd: City of Kawartha Lakes
Year: 2010 Background Traffic
N/S St: Colborne Street/Lindsay Street

SIGNALIZED INTERSECTION SUMMARY

	Eastbound			Westbound			Northbound			Southbound		
	L	T	R	L	T	R	L	T	R	L	T	R
No. Lanes	1	1	0	1	1	0	1	1	0	1	1	1
LGConfig	L	TR		L	TR		L	TR		L	T	R
Volume	189	69	66	50	138	209	63	440	87	124	385	189
Lane Width	3.6	3.6		3.6	3.6		3.6	3.6		3.6	3.6	3.6
RTOR Vol			0			0			0			0

Duration 0.25 Area Type: All other areas

Signal Operations

Phase Combination	1	2	3	4		5	6	7	8
EB Left	A				NB Left	A			
Thru	A				Thru	A			
Right	A				Right	A			
Peds	X				Peds	X			
WB Left	A				SB Left	A			
Thru	A				Thru	A			
Right	A				Right	A			
Peds	X				Peds	X			
NB Right					EB Right				
SB Right					WB Right				
Green	20.6					27.4			
Yellow	4.0					4.0			
All Red	2.0					2.0			

Cycle Length: 60.0 secs

Intersection Performance Summary

Appr/ Lane Grp	Lane Group Capacity	Adj Sat Flow Rate (s)	Ratios v/c	Ratios g/C	Lane Group Delay	Lane Group LOS	Approach Delay	Approach LOS
Eastbound								
L	286	834	0.68	0.34	23.4	C		
TR	590	1719	0.24	0.34	14.3	B	19.6	B
Westbound								
L	426	1241	0.12	0.34	13.6	B		
TR	586	1708	0.61	0.34	18.2	B	17.6	B
Northbound								
L	383	839	0.17	0.46	9.8	A		
TR	832	1821	0.65	0.46	14.5	B	14.0	B
Southbound								
L	271	593	0.47	0.46	12.6	B		
T	859	1881	0.46	0.46	11.6	B	11.5	B
R	692	1515	0.28	0.46	10.4	B		

Intersection Delay = 14.7 (sec/veh) Intersection LOS = B

Sum of flow ratios for critical lane groups, Yc = Sum (v/s) = 0.53
Total lost time per cycle, L = 12.00 sec
Critical flow rate to capacity ratio, Xc = (Yc)(C)/(C-L) = 0.67

HCS2000: Signalized Intersections Release 4.1d

Analyst: J.M. Mark
Agency: Mark Engineering
Date: 11/17/2009
Period: Weekday Peak Hour
Project ID: Fenelon Falls TIS - C10TPb
E/W St: Helen Street/Plaza Access

Inter.: Lindsay St/Colborne St & Helen
Area Type: All other areas
Jurisd: City of Kawartha Lakes
Year: 2010 Total Traffic
N/S St: Colborne Street/Lindsay Street

SIGNALIZED INTERSECTION SUMMARY

	Eastbound			Westbound			Northbound			Southbound		
	L	T	R	L	T	R	L	T	R	L	T	R
No. Lanes	1	1	0	0	1	1	1	1	0	1	1	1
LGConfig	L	TR			LT	R	L	TR		L	T	R
Volume	288	28	62	43	55	153	65	467	67	100	440	223
Lane Width	3.6	3.6			3.6	3.6	3.6	3.6		3.6	3.6	3.6
RTOR Vol			0			0			0			0

Duration 0.25 Area Type: All other areas

Signal Operations

Phase Combination		1	2	3	4			5	6	7	8
EB	Left		A			NB	Left		A		
	Thru		A				Thru		A		
	Right		A				Right		A		
	Peds		X				Peds		X		
WB	Left		A			SB	Left	A	A		
	Thru		A				Thru	A	A		
	Right		A				Right	A	A		
	Peds		X				Peds				
NB	Right					EB	Right				
SB	Right					WB	Right				
Green		13.1	15.2					4.1	34.6		
Yellow		3.0	4.0					3.0	4.0		
All Red		0.0	2.0					0.0	2.0		

Cycle Length: 85.0 secs

Intersection Performance Summary

Appr/ Lane Grp	Lane Group Capacity	Adj Sat Flow Rate (s)	Ratios v/c	Ratios g/C	Lane Group Delay	Lane Group LOS	Approach Delay	Approach LOS
Eastbound								
L	408	1706	0.78	0.37	31.1	C		
TR	597	1622	0.17	0.37	18.2	B	28.0	C
Westbound								
LT	265	1481	0.41	0.18	32.0	C	34.3	C
R	281	1571	0.60	0.18	35.8	D		
Northbound								
L	329	808	0.22	0.41	16.7	B		
TR	741	1821	0.80	0.41	28.4	C	27.2	C
Southbound								
L	211	1784	0.53	0.49	18.4	B		
T	905	1845	0.54	0.49	15.7	B	15.4	B
R	733	1495	0.34	0.49	13.5	B		

Intersection Delay = 23.7 (sec/veh) Intersection LOS = C

Sum of flow ratios for critical lane groups, Yc = Sum (v/s) = 0.64
Total lost time per cycle, L = 24.00 sec
Critical flow rate to capacity ratio, Xc = (Yc)(C)/(C-L) = 0.89

HCS2000: Signalized Intersections Release 4.1d

Analyst: J.M. Mark
Agency: Mark Engineering
Date: 11/17/2009
Period: Saturday Inbound Peak Hour
Project ID: Fenelon Falls TIS - C10TSb
E/W St: Helen Street/Plaza Access

Inter.: Lindsay St/Colborne St & Helen
Area Type: All other areas
Jurisd: City of Kawartha Lakes
Year: 2010 Total Traffic
N/S St: Colborne Street/Lindsay Street

SIGNALIZED INTERSECTION SUMMARY

	Eastbound			Westbound			Northbound			Southbound		
	L	T	R	L	T	R	L	T	R	L	T	R
No. Lanes	1	1	0	0	1	1	1	1	0	1	1	1
LGConfig	L	TR			LT	R	L	TR		L	T	R
Volume	232	69	87	50	138	209	82	559	87	124	614	289
Lane Width	3.6	3.6			3.6	3.6	3.6	3.6		3.6	3.6	3.6
RTOR Vol			0			0			0			0

Duration 0.25 Area Type: All other areas

Signal Operations

Phase Combination	1	2	3	4		5	6	7	8
EB Left		A			NB Left		A		
Thru		A			Thru		A		
Right		A			Right		A		
Peds		X			Peds		X		
WB Left		A			SB Left	A	A		
Thru		A			Thru	A	A		
Right		A			Right	A	A		
Peds		X			Peds		X		
NB Right					EB Right				
SB Right					WB Right				
Green	10.5	15.5				3.3	37.7		
Yellow	3.0	4.0				3.0	4.0		
All Red	0.0	2.0				0.0	2.0		

Cycle Length: 85.0 secs

Intersection Performance Summary

Appr/ Lane Grp	Lane Group Capacity	Adj Sat Flow Rate (s)	Ratios v/c	Ratios g/C	Lane Group Delay	Lane Group LOS	Approach Delay	Approach LOS
Eastbound								
L	304	1757	0.79	0.34	35.3	D		
TR	571	1675	0.28	0.34	20.7	C	29.4	C
Westbound								
LT	293	1607	0.66	0.18	37.8	D	41.3	D
R	283	1554	0.76	0.18	44.4	D		
Northbound								
L	252	569	0.34	0.44	16.3	B		
TR	813	1834	0.82	0.44	27.3	C	26.1	C
Southbound								
L	184	1761	0.70	0.52	27.0	C		
T	974	1881	0.65	0.52	16.4	B	16.6	B
R	783	1512	0.38	0.52	12.6	B		

Intersection Delay = 25.1 (sec/veh) Intersection LOS = C

Sum of flow ratios for critical lane groups, Yc = Sum (v/s) = 0.66
Total lost time per cycle, L = 24.00 sec
Critical flow rate to capacity ratio, Xc = (Yc)(C)/(C-L) = 0.92

HCS2000: Signalized Intersections Release 4.1d

Analyst: J.M. Mark
Agency: Mark Engineering
Date: 11/17/2009
Period: Saturday Outbound Peak Hour
Project ID: Fenelon Falls TIS - C10TTb
E/W St: Helen Street/Plaza Access

Inter.: Lindsay St/Colborne St & Helen
Area Type: All other areas
Jurisd: City of Kawartha Lakes
Year: 2010 Total Traffic

N/S St: Colborne Street/Lindsay Street

SIGNALIZED INTERSECTION SUMMARY

	Eastbound			Westbound			Northbound			Southbound		
	L	T	R	L	T	R	L	T	R	L	T	R
No. Lanes	1	1	0	0	1	1	1	1	0	1	1	1
LGConfig	L	TR			LT	R	L	TR		L	T	R
Volume	286	69	87	50	138	209	82	723	87	124	501	246
Lane Width	3.6	3.6			3.6	3.6	3.6	3.6		3.6	3.6	3.6
RTOR Vol			0			0			0			0

Duration 0.25 Area Type: All other areas

Signal Operations

Phase Combination	1	2	3	4		5	6	7	8
EB Left		A			NB Left		A		
Thru		A			Thru		A		
Right		A			Right		A		
Peds		X			Peds		X		
WB Left		A			SB Left	A	A		
Thru		A			Thru	A	A		
Right		A			Right	A	A		
Peds		X			Peds		X		
NB Right					EB Right				
SB Right					WB Right				
Green	13.5	21.3				4.8	52.4		
Yellow	3.0	4.0				3.0	4.0		
All Red	0.0	2.0				0.0	2.0		

Cycle Length: 110.0 secs

Intersection Performance Summary

Appr/ Lane Grp	Lane Group Capacity	Adj Sat Flow Rate (s)	Ratios v/c	Ratios g/C	Lane Group Delay	Lane Group LOS	Approach Delay	Approach LOS
Eastbound								
L	313	1756	0.94	0.34	71.4	E		
TR	577	1678	0.28	0.34	26.5	C	55.5	E
Westbound								
LT	312	1611	0.62	0.19	44.5	D	47.0	D
R	301	1557	0.71	0.19	49.3	D		
Northbound								
L	360	756	0.24	0.48	17.3	B		
TR	881	1849	0.95	0.48	46.4	D	43.7	D
Southbound								
L	146	1778	0.88	0.55	65.4	E		
T	1029	1881	0.50	0.55	15.9	B	22.4	C
R	831	1519	0.31	0.55	13.7	B		

Intersection Delay = 39.1 (sec/veh) Intersection LOS = D

Sum of flow ratios for critical lane groups, Yc = Sum (v/s) = 0.80
Total lost time per cycle, L = 18.00 sec
Critical flow rate to capacity ratio, Xc = (Yc)(C)/(C-L) = 0.96

HCS2000: Signalized Intersections Release 4.1d

Analyst: J.M. Mark
Agency: Mark Engineering
Date: 9/16/2009
Period: Weekday Peak Hour
Project ID: Fenelon Falls TIS - C15BP
E/W St: Helen Street/Plaza Access

Inter.: Lindsay St/Colborne St & Helen
Area Type: All other areas
Jurisd: City of Kawartha Lakes
Year: 2015 Background Traffic
N/S St: Colborne Street/Lindsay Street

SIGNALIZED INTERSECTION SUMMARY

	Eastbound			Westbound			Northbound			Southbound		
	L	T	R	L	T	R	L	T	R	L	T	R
No. Lanes	1	1	0	1	1	0	1	1	0	1	1	1
LGConfig	L	TR		L	TR		L	TR		L	T	R
Volume	175	30	56	47	61	169	55	363	74	110	341	159
Lane Width	3.6	3.6		3.6	3.6		3.6	3.6		3.6	3.6	3.6
RTOR Vol			0			0			0			0

Duration 0.25 Area Type: All other areas

Signal Operations

Phase Combination	1	2	3	4		5	6	7	8
EB Left	A				NB Left	A			
Thru	A				Thru	A			
Right	A				Right	A			
Peds	X				Peds	X			
WB Left	A				SB Left	A			
Thru	A				Thru	A			
Right	A				Right	A			
Peds	X				Peds	X			
NB Right					EB Right				
SB Right					WB Right				
Green	15.4					32.6			
Yellow	4.0					4.0			
All Red	2.0					2.0			

Cycle Length: 60.0 secs

Intersection Performance Summary

Appr/ Lane Grp	Lane Group Capacity	Adj Sat Flow Rate (s)	Ratios v/c	Ratios g/C	Lane Group Delay	Lane Group LOS	Approach Delay	Approach LOS
Eastbound								
L	268	1046	0.67	0.26	26.5	C		
TR	423	1650	0.21	0.26	17.8	B	23.6	C
Westbound								
L	323	1258	0.15	0.26	17.4	B		
TR	425	1656	0.56	0.26	21.0	C	20.4	C
Northbound								
L	517	951	0.11	0.54	6.7	A		
TR	982	1808	0.46	0.54	8.7	A	8.5	A
Southbound								
L	461	849	0.25	0.54	7.5	A		
T	1002	1845	0.35	0.54	7.9	A	7.7	A
R	766	1410	0.21	0.54	7.2	A		

Intersection Delay = 12.6 (sec/veh) Intersection LOS = B

Sum of flow ratios for critical lane groups, Yc = Sum (v/s) = 0.42
Total lost time per cycle, L = 12.00 sec
Critical flow rate to capacity ratio, Xc = (Yc)(C)/(C-L) = 0.53

HCS2000: Signalized Intersections Release 4.1d

Analyst: J.M. Mark
Agency: Mark Engineering
Date: 9/16/2009
Period: Saturday Peak Hour
Project ID: Fenelon Falls TIS - C15BS
E/W St: Helen Street/Plaza Access

Inter.: Lindsay St/Colborne St & Helen
Area Type: All other areas
Jurisd: City of Kawartha Lakes
Year: 2015 Background Traffic
N/S St: Colborne Street/Lindsay Street

SIGNALIZED INTERSECTION SUMMARY

	Eastbound			Westbound			Northbound			Southbound		
	L	T	R	L	T	R	L	T	R	L	T	R
No. Lanes	1	1	0	1	1	0	1	1	0	1	1	1
LGConfig	L	TR		L	TR		L	TR		L	T	R
Volume	208	77	73	55	152	231	70	485	96	137	425	208
Lane Width	3.6	3.6		3.6	3.6		3.6	3.6		3.6	3.6	3.6
RTOR Vol			0			0			0			0

Duration 0.25 Area Type: All other areas

Signal Operations

Phase Combination	1	2	3	4		5	6	7	8
EB Left	A				NB Left	A			
Thru	A				Thru	A			
Right	A				Right	A			
Peds	X				Peds	X			
WB Left	A				SB Left	A			
Thru	A				Thru	A			
Right	A				Right	A			
Peds	X				Peds	X			
NB Right					EB Right				
SB Right					WB Right				
Green	20.6					27.4			
Yellow	4.0					4.0			
All Red	2.0					2.0			

Cycle Length: 60.0 secs

Intersection Performance Summary

Appr/ Lane Grp	Lane Group Capacity	Adj Sat Flow Rate (s)	Ratios v/c	Ratios g/C	Lane Group Delay	Lane Group LOS	Approach Delay	Approach LOS
Eastbound								
L	254	741	0.84	0.34	40.1	D		
TR	590	1717	0.26	0.34	14.4	B	29.3	C
Westbound								
L	420	1222	0.14	0.34	13.7	B		
TR	585	1704	0.68	0.34	19.9	B	19.1	B
Northbound								
L	349	765	0.21	0.46	10.1	B		
TR	830	1818	0.72	0.46	16.3	B	15.6	B
Southbound								
L	229	501	0.62	0.46	17.2	B		
T	859	1881	0.51	0.46	12.1	B	12.6	B
R	687	1504	0.31	0.46	10.6	B		

Intersection Delay = 17.5 (sec/veh) Intersection LOS = B

Sum of flow ratios for critical lane groups, Yc = Sum (v/s) = 0.62
Total lost time per cycle, L = 12.00 sec
Critical flow rate to capacity ratio, Xc = (Yc)(C)/(C-L) = 0.77

HCS2000: Signalized Intersections Release 4.1d

Analyst: J.M. Mark
Agency: Mark Engineering
Date: 11/17/2009
Period: Weekday Peak Hour
Project ID: Fenelon Falls TIS - C15TP
E/W St: Helen Street/Plaza Access

Inter.: Lindsay St/Colborne St & Helen
Area Type: All other areas
Jurisd: City of Kawartha Lakes
Year: 2015 Total Traffic
N/S St: Colborne Street/Lindsay Street

SIGNALIZED INTERSECTION SUMMARY

	Eastbound			Westbound			Northbound			Southbound		
	L	T	R	L	T	R	L	T	R	L	T	R
No. Lanes	1	1	0	0	1	1	1	1	0	1	1	1
LGConfig	L	TR			LT	R	L	TR		L	T	R
Volume	305	30	67	47	61	169	70	502	74	110	472	236
Lane Width	3.6	3.6			3.6	3.6	3.6	3.6		3.6	3.6	3.6
RTOR Vol			0			0			0			0

Duration 0.25 Area Type: All other areas

Signal Operations

Phase Combination	1	2	3	4		5	6	7	8
EB Left		A			NB Left		A		
Thru		A			Thru		A		
Right		A			Right		A		
Peds		X			Peds		X		
WB Left		A			SB Left	A	A		
Thru		A			Thru	A	A		
Right		A			Right	A	A		
Peds		X			Peds				
NB Right					EB Right				
SB Right					WB Right				
Green	13.1	15.2				4.1	34.6		
Yellow	3.0	4.0				3.0	4.0		
All Red	0.0	2.0				0.0	2.0		

Cycle Length: 85.0 secs

Intersection Performance Summary

Appr/ Lane Grp	Lane Group Capacity	Adj Sat Flow Rate (s)	Ratios v/c	Ratios g/C	Lane Group Delay	Lane Group LOS	Approach Delay	Approach LOS
Eastbound								
L	397	1704	0.85	0.37	40.9	D		
TR	595	1615	0.18	0.37	18.3	B	35.5	D
Westbound								
LT	264	1478	0.45	0.18	32.4	C	36.3	D
R	280	1566	0.67	0.18	38.7	D		
Northbound								
L	302	742	0.26	0.41	17.2	B		
TR	740	1819	0.86	0.41	33.5	C	31.8	C
Southbound								
L	177	1785	0.69	0.49	28.0	C		
T	905	1845	0.58	0.49	16.3	B	17.1	B
R	733	1495	0.36	0.49	13.7	B		

Intersection Delay = 27.5 (sec/veh) Intersection LOS = C

Sum of flow ratios for critical lane groups, Yc = Sum (v/s) = 0.68
Total lost time per cycle, L = 18.00 sec
Critical flow rate to capacity ratio, Xc = (Yc)(C)/(C-L) = 0.86

HCS2000: Signalized Intersections Release 4.1d

Analyst: J.M. Mark
Agency: Mark Engineering
Date: 11/17/2009
Period: Saturday Inbound Peak Hour
Project ID: Fenelon Falls TIS - C15TS
E/W St: Helen Street/Plaza Access

Inter.: Lindsay St/Colborne St & Helen
Area Type: All other areas
Jurisd: City of Kawartha Lakes
Year: 2015 Total Traffic
N/S St: Colborne Street/Lindsay Street

SIGNALIZED INTERSECTION SUMMARY

	Eastbound			Westbound			Northbound			Southbound		
	L	T	R	L	T	R	L	T	R	L	T	R
No. Lanes	1	1	0	0	1	1	1	1	0	1	1	1
LGConfig	L	TR			LT	R	L	TR		L	T	R
Volume	251	77	94	55	152	231	89	604	96	137	654	302
Lane Width	3.6	3.6			3.6	3.6	3.6	3.6		3.6	3.6	3.6
RTOR Vol			0			0			0			0

Duration 0.25 Area Type: All other areas

Signal Operations

Phase Combination	1	2	3	4		5	6	7	8
EB Left		A			NB Left		A		
Thru		A			Thru		A		
Right		A			Right		A		
Peds		X			Peds		X		
WB Left		A			SB Left	A	A		
Thru		A			Thru	A	A		
Right		A			Right	A	A		
Peds		X			Peds		X		
NB Right					EB Right				
SB Right					WB Right				
Green	9.4	19.7				4.4	43.5		
Yellow	3.0	4.0				3.0	4.0		
All Red	0.0	2.0				0.0	2.0		

Cycle Length: 95.0 secs

Intersection Performance Summary

Appr/ Lane Grp	Lane Group Capacity	Adj Sat Flow Rate (s)	Ratios v/c	Ratios g/C	Lane Group Delay	Lane Group LOS	Approach Delay	Approach LOS
Eastbound								
L	274	1755	0.95	0.34	71.2	E		
TR	567	1679	0.31	0.34	23.6	C	51.9	D
Westbound								
LT	332	1601	0.64	0.21	38.7	D	41.5	D
R	322	1553	0.74	0.21	44.0	D		
Northbound								
L	239	522	0.38	0.46	18.0	B		
TR	839	1832	0.86	0.46	32.1	C	30.5	C
Southbound								
L	174	1763	0.81	0.54	43.1	D		
T	1008	1881	0.67	0.54	17.7	B	19.6	B
R	806	1504	0.39	0.54	13.2	B		

Intersection Delay = 31.2 (sec/veh) Intersection LOS = C

Sum of flow ratios for critical lane groups, Yc = Sum (v/s) = 0.74
Total lost time per cycle, L = 18.00 sec
Critical flow rate to capacity ratio, Xc = (Yc)(C)/(C-L) = 0.92

HCS2000: Signalized Intersections Release 4.1d

Analyst: J.M. Mark
Agency: Mark Engineering
Date: 11/17/2009
Period: Saturday Outbound Peak Hour
Project ID: Fenelon Falls TIS - C15TT
E/W St: Helen Street/Plaza Access

Inter.: Lindsay St/Colborne St & Helen
Area Type: All other areas
Jurisd: City of Kawartha Lakes
Year: 2015 Total Traffic

N/S St: Colborne Street/Lindsay Street

SIGNALIZED INTERSECTION SUMMARY

	Eastbound			Westbound			Northbound			Southbound		
	L	T	R	L	T	R	L	T	R	L	T	R
No. Lanes	1	1	0	0	1	1	1	1	0	1	1	1
LGConfig	L	TR			LT	R	L	TR		L	T	R
Volume	305	77	94	55	152	231	89	768	96	137	541	265
Lane Width	3.6	3.6			3.6	3.6	3.6	3.6		3.6	3.6	3.6
RTOR Vol			0			0			0			0

Duration 0.25 Area Type: All other areas

Signal Operations

Phase Combination	1	2	3	4		5	6	7	8
EB Left		A			NB Left		A		
Thru		A			Thru		A		
Right		A			Right		A		
Peds		X			Peds		X		
WB Left		A			SB Left	A	A		
Thru		A			Thru	A	A		
Right		A			Right	A	A		
Peds		X			Peds		X		
NB Right					EB Right				
SB Right					WB Right				
Green	13.8	15.4				4.0	48.8		
Yellow	3.0	4.0				3.0	4.0		
All Red	0.0	2.0				0.0	2.0		

Cycle Length: 100.0 secs

Intersection Performance Summary

Appr/ Lane Grp	Lane Group Capacity	Adj Sat Flow Rate (s)	Ratios v/c	Ratios g/C	Lane Group Delay	Lane Group LOS	Approach Delay	Approach LOS
Eastbound								
L	316	1753	0.97	0.32	70.2	E		
TR	535	1663	0.32	0.32	26.0	C	54.3	D
Westbound								
LT	246	1598	0.84	0.15	63.4	E	79.8	E
R	236	1532	0.98	0.15	94.6	F		
Northbound								
L	358	734	0.25	0.49	15.3	B		
TR	901	1846	0.96	0.49	45.3	D	42.5	D
Southbound								
L	146	1778	0.94	0.56	78.9	E		
T	1050	1881	0.52	0.56	14.2	B	23.0	C
R	843	1511	0.31	0.56	12.1	B		

Intersection Delay = 43.8 (sec/veh) Intersection LOS = D

Sum of flow ratios for critical lane groups, Yc = Sum (v/s) = 0.80
Total lost time per cycle, L = 18.00 sec
Critical flow rate to capacity ratio, Xc = (Yc)(C)/(C-L) = 0.98

HCS2000: Signalized Intersections Release 4.1d

Analyst: J.M. Mark
Agency: Mark Engineering
Date: 9/16/2009
Period: Weekday Peak Hour
Project ID: Fenelon Falls TIS - C20BPa
E/W St: Helen Street/Plaza Access

Inter.: Lindsay St/Colborne St & Helen
Area Type: All other areas
Jurisd: City of Kawartha Lakes
Year: 2020 Background Traffic
N/S St: Colborne Street/Lindsay Street

SIGNALIZED INTERSECTION SUMMARY

	Eastbound			Westbound			Northbound			Southbound		
	L	T	R	L	T	R	L	T	R	L	T	R
No. Lanes	1	1	0	1	1	0	1	1	0	1	1	1
LGConfig	L	TR		L	TR		L	TR		L	T	R
Volume	193	34	62	52	67	187	61	400	82	122	377	175
Lane Width	3.6	3.6		3.6	3.6		3.6	3.6		3.6	3.6	3.6
RTOR Vol			0			0			0			0

Duration 0.25 Area Type: All other areas

Signal Operations

Phase Combination	1	2	3	4		5	6	7	8
EB Left	A	A			NB Left	A			
Thru	A	A			Thru	A			
Right	A	A			Right	A			
Peds		X			Peds	X			
WB Left		A			SB Left	A			
Thru		A			Thru	A			
Right		A			Right	A			
Peds		X			Peds	X			
NB Right					EB Right				
SB Right					WB Right				
Green	4.6	15.2				24.2			
Yellow	3.0	5.0				4.0			
All Red	0.0	2.0				2.0			

Cycle Length: 60.0 secs

Intersection Performance Summary

Appr/ Lane Grp	Lane Group Capacity	Adj Sat Flow Rate (s)	Ratios v/c	Ratios g/C	Lane Group Delay	Lane Group LOS	Approach Delay	Approach LOS
Eastbound								
L	321	1714	0.62	0.38	19.5	B		
TR	626	1647	0.16	0.38	12.4	B	17.1	B
Westbound								
L	315	1242	0.17	0.25	17.7	B		
TR	419	1652	0.63	0.25	22.8	C	21.9	C
Northbound								
L	314	779	0.20	0.40	11.9	B		
TR	727	1803	0.68	0.40	17.4	B	16.8	B
Southbound								
L	247	612	0.51	0.40	15.2	B		
T	744	1845	0.52	0.40	14.2	B	14.0	B
R	553	1370	0.33	0.40	12.6	B		

Intersection Delay = 16.7 (sec/veh) Intersection LOS = B

Sum of flow ratios for critical lane groups, Yc = Sum (v/s) = 0.51
Total lost time per cycle, L = 20.00 sec
Critical flow rate to capacity ratio, Xc = (Yc)(C)/(C-L) = 0.77

HCS2000: Signalized Intersections Release 4.1d

Analyst: J.M. Mark
Agency: Mark Engineering
Date: 9/16/2009
Period: Saturday Peak Hour
Project ID: Fenelon Falls TIS - C20BSa
E/W St: Helen Street/Plaza Access

Inter.: Lindsay St/Colborne St & Helen
Area Type: All other areas
Jurisd: City of Kawartha Lakes
Year: 2020 Background Traffic
N/S St: Colborne Street/Lindsay Street

SIGNALIZED INTERSECTION SUMMARY

	Eastbound			Westbound			Northbound			Southbound		
	L	T	R	L	T	R	L	T	R	L	T	R
No. Lanes	1	1	0	1	1	0	1	1	0	1	1	1
LGConfig	L	TR		L	TR		L	TR		L	T	R
Volume	230	85	81	61	168	255	77	536	106	152	469	230
Lane Width	3.6	3.6		3.6	3.6		3.6	3.6		3.6	3.6	3.6
RTOR Vol			0			0			0			0

Duration 0.25 Area Type: All other areas

Signal Operations

Phase Combination	1	2	3	4		5	6	7	8
EB Left	A	A			NB Left	A			
Thru	A	A			Thru	A			
Right	A	A			Right	A			
Peds		X			Peds	X			
WB Left		A			SB Left	A			
Thru		A			Thru	A			
Right		A			Right	A			
Peds		X			Peds	X			
NB Right					EB Right				
SB Right					WB Right				
Green	6.2	19.6				34.2			
Yellow	3.0	4.0				4.0			
All Red	0.0	2.0				2.0			

Cycle Length: 75.0 secs

Intersection Performance Summary

Appr/ Lane Grp	Lane Group Capacity	Adj Sat Flow Rate (s)	Ratios v/c	Ratios g/C	Lane Group Delay	Lane Group LOS	Approach Delay	Approach LOS
Eastbound								
L	245	1770	0.97	0.38	70.0	E		
TR	654	1704	0.26	0.38	16.0	B	47.3	D
Westbound								
L	310	1188	0.20	0.26	21.9	C		
TR	443	1694	0.98	0.26	66.0	E	60.5	E
Northbound								
L	295	646	0.27	0.46	13.1	B		
TR	828	1815	0.80	0.46	23.1	C	22.0	C
Southbound								
L	166	365	0.95	0.46	73.4	E		
T	858	1881	0.56	0.46	15.8	B	25.5	C
R	680	1491	0.35	0.46	13.5	B		

Intersection Delay = 34.9 (sec/veh) Intersection LOS = C

Sum of flow ratios for critical lane groups, Yc = Sum (v/s) = 0.79
Total lost time per cycle, L = 12.00 sec
Critical flow rate to capacity ratio, Xc = (Yc)(C)/(C-L) = 0.94

HCS2000: Signalized Intersections Release 4.1d

Analyst: J.M. Mark
Agency: Mark Engineering
Date: 11/17/2009
Period: Weekday Peak Hour
Project ID: Fenelon Falls TIS - C205TPa
E/W St: Helen Street/Plaza Access

Inter.: Lindsay St/Colborne St & Helen
Area Type: All other areas
Jurisd: City of Kawartha Lakes
Year: 2020 Total Traffic
N/S St: Colborne Street/Lindsay Street

SIGNALIZED INTERSECTION SUMMARY

	Eastbound			Westbound			Northbound			Southbound		
	L	T	R	L	T	R	L	T	R	L	T	R
No. Lanes	1	1	0	0	1	1	1	1	0	1	1	1
LGConfig	L	TR			LT	R	L	TR		L	T	R
Volume	323	34	73	52	67	187	76	539	82	122	508	254
Lane Width	3.6	3.6			3.6	3.6	3.6	3.6		3.6	3.6	3.6
RTOR Vol			0			0			0			0

Duration 0.25 Area Type: All other areas

Signal Operations

Phase Combination	1	2	3	4		5	6	7	8
EB Left		A			NB Left		A		
Thru		A			Thru		A		
Right		A			Right		A		
Peds		X			Peds		X		
WB Left		A			SB Left	A	A		
Thru		A			Thru	A	A		
Right		A			Right	A	A		
Peds		X			Peds				
NB Right					EB Right				
SB Right					WB Right	A			
Green	12.7	18.0				4.1	37.3		
Yellow	3.0	4.0				3.0	4.0		
All Red	0.0	2.0				0.0	2.0		

Cycle Length: 90.1 secs

Intersection Performance Summary

Appr/ Lane Grp	Lane Group Capacity	Adj Sat Flow Rate (s)	Ratios v/c	Ratios g/C	Lane Group Delay	Lane Group LOS	Approach Delay	Approach LOS
Eastbound								
L	391	1704	0.92	0.37	54.0	D		
TR	606	1620	0.20	0.37	19.2	B	45.4	D
Westbound								
LT	292	1464	0.45	0.20	32.8	C	28.2	C
R	489	1567	0.43	0.31	25.2	C		
Northbound								
L	271	655	0.31	0.41	18.4	B		
TR	752	1817	0.92	0.41	41.1	D	38.6	D
Southbound								
L	165	1786	0.82	0.49	47.0	D		
T	909	1845	0.62	0.49	18.0	B	21.0	C
R	737	1495	0.38	0.49	14.6	B		

Intersection Delay = 31.8 (sec/veh) Intersection LOS = C

Sum of flow ratios for critical lane groups, Yc = Sum (v/s) = 0.75
Total lost time per cycle, L = 18.00 sec
Critical flow rate to capacity ratio, Xc = (Yc)(C)/(C-L) = 0.94

HCS2000: Signalized Intersections Release 4.1d

Analyst: J.M. Mark
Agency: Mark Engineering
Date: 11/17/2009
Period: Saturday Inbound Peak Hour
Project ID: Fenelon Falls TIS - C20TSa
E/W St: Helen Street/Plaza Access

Inter.: Lindsay St/Colborne St & Helen
Area Type: All other areas
Jurisd: City of Kawartha Lakes
Year: 2020 Total Traffic
N/S St: Colborne Street/Lindsay Street

SIGNALIZED INTERSECTION SUMMARY

	Eastbound			Westbound			Northbound			Southbound		
	L	T	R	L	T	R	L	T	R	L	T	R
No. Lanes	1	1	0	0	1	1	1	1	0	1	1	1
LGConfig	L	TR			LT	R	L	TR		L	T	R
Volume	273	85	102	61	168	255	96	655	106	152	698	324
Lane Width	3.6	3.6			3.6	3.6	3.6	3.6		3.6	3.6	3.6
RTOR Vol			0			0			0			0

Duration 0.25 Area Type: All other areas

Signal Operations

Phase Combination		1	2	3	4			5	6	7	8
EB	Left		A			NB	Left		A		
	Thru		A				Thru		A		
	Right		A				Right		A		
	Peds		X				Peds		X		
WB	Left		A			SB	Left	A	A		
	Thru		A				Thru	A	A		
	Right		A				Right	A	A		
	Peds		X				Peds		X		
NB	Right					EB	Right				
SB	Right					WB	Right	A			
Green		10.5	15.4					3.4	37.7		
Yellow		3.0	4.0					3.0	4.0		
All Red		0.0	2.0					0.0	2.0		

Cycle Length: 85.0 secs

Intersection Performance Summary

Appr/ Lane Grp	Lane Group Capacity	Adj Sat Flow Rate (s)	Ratios v/c	Ratios g/C	Lane Group Delay	Lane Group LOS	Approach Delay	Approach LOS
Eastbound								
L	304	1755	0.90	0.34	50.8	D		
TR	567	1667	0.33	0.34	21.2	C	38.8	D
Westbound								
LT	288	1588	0.80	0.18	47.6	D	36.9	D
R	449	1540	0.57	0.29	27.3	C		
Northbound								
L	207	466	0.46	0.44	18.2	B		
TR	810	1827	0.94	0.44	41.1	D	38.6	D
Southbound								
L	159	1765	0.96	0.52	82.6	F		
T	976	1881	0.72	0.52	18.2	B	25.1	C
R	772	1488	0.42	0.52	12.9	B		

Intersection Delay = 33.0 (sec/veh) Intersection LOS = C

Sum of flow ratios for critical lane groups, Yc = Sum (v/s) = 0.75
Total lost time per cycle, L = 18.00 sec
Critical flow rate to capacity ratio, Xc = (Yc)(C)/(C-L) = 0.95

HCS2000: Signalized Intersections Release 4.1d

Analyst: J.M. Mark
Agency: Mark Engineering
Date: 11/17/2009
Period: Saturday Outbound Peak Hour
Project ID: Fenelon Falls TIS - C20TTa
E/W St: Helen Street/Plaza Access

Inter.: Lindsay St/Colborne St & Helen
Area Type: All other areas
Jurisd: City of Kawartha Lakes
Year: 2020 Total Traffic
N/S St: Colborne Street/Lindsay Street

SIGNALIZED INTERSECTION SUMMARY

	Eastbound			Westbound			Northbound			Southbound		
	L	T	R	L	T	R	L	T	R	L	T	R
No. Lanes	1	1	0	0	1	1	1	1	0	1	1	1
LGConfig	L	TR			LT	R	L	TR		L	T	R
Volume	327	85	102	61	168	255	96	919	106	152	585	287
Lane Width	3.6	3.6			3.6	3.6	3.6	3.6		3.6	3.6	3.6
RTOR Vol			0			0			0			0

Duration 0.25 Area Type: All other areas

Signal Operations

Phase Combination	1	2	3	4		5	6	7	8
EB Left		A			NB Left		A		
Thru		A			Thru		A		
Right		A			Right		A		
Peds		X			Peds		X		
WB Left		A			SB Left	A	A		
Thru		A			Thru	A	A		
Right		A			Right	A	A		
Peds		X			Peds		X		
NB Right					EB Right				
SB Right					WB Right	A			
Green	9.1	12.8				3.0	52.1		
Yellow	3.0	4.0				3.0	4.0		
All Red	0.0	2.0				0.0	2.0		

Cycle Length: 95.0 secs

Intersection Performance Summary

Appr/ Lane Grp	Lane Group Capacity	Adj Sat Flow Rate (s)	Ratios v/c	Ratios g/C	Lane Group Delay	Lane Group LOS	Approach Delay	Approach LOS
Eastbound								
L	302	1756	1.08	0.29	106.1	F		
TR	431	1645	0.43	0.26	29.9	C	78.4	E
Westbound								
LT	213	1581	1.08	0.13	124.1	F	80.8	F
R	347	1513	0.73	0.23	41.8	D		
Northbound								
L	393	716	0.24	0.55	11.5	B		
TR	1015	1850	1.01	0.55	52.1	D	48.7	D
Southbound								
L	192	1785	0.79	0.64	43.7	D		
T	1150	1881	0.51	0.61	10.8	B	15.2	B
R	925	1512	0.31	0.61	9.0	A		

Intersection Delay = 47.6 (sec/veh) Intersection LOS = D

Sum of flow ratios for critical lane groups, Yc = Sum (v/s) = 0.97
Total lost time per cycle, L = 12.00 sec
Critical flow rate to capacity ratio, Xc = (Yc)(C)/(C-L) = 1.10

HCS2000: Unsignalized Intersections Release 4.1d

TWO-WAY STOP CONTROL SUMMARY

Analyst:	J.M. Mark
Agency/Co.:	Mark Engineering
Date Performed:	9/17/2009
Analysis Time Period:	Weekday Peak Hour
Intersection:	Lindsay St. & Veterans Way
Jurisdiction:	City of Kawartha Lakes
Units: U. S. Metric	
Analysis Year:	2010 Background Traffic
Project ID: Fenelone Falls TIS - D10BP	
East/West Street:	Veterans Way
North/South Street:	Lindsay Street
Intersection Orientation: NS	Study period (hrs): 0.25

Vehicle Volumes and Adjustments

Major Street: Approach	Northbound			Southbound		
Movement	1	2	3	4	5	6
	L	T	R	L	T	R
Volume	17	384	10	3	292	19
Peak-Hour Factor, PHF	0.94	0.94	0.94	0.94	0.94	0.94
Hourly Flow Rate, HFR	18	408	10	3	310	20
Percent Heavy Vehicles	0	--	--	0	--	--
Median Type/Storage	Undivided /					
RT Channelized?						
Lanes	0	2	0	0	2	0
Configuration	LT		TR	LT		TR
Upstream Signal?	No			No		

Minor Street: Approach	Westbound			Eastbound		
Movement	7	8	9	10	11	12
	L	T	R	L	T	R
Volume	4	1	35	9	1	17
Peak Hour Factor, PHF	0.94	0.94	0.94	0.94	0.94	0.94
Hourly Flow Rate, HFR	4	1	37	9	1	18
Percent Heavy Vehicles	0	0	3	0	0	6
Percent Grade (%)		0			0	
Flared Approach: Exists?/Storage		No /			No /	
Lanes	0	1	0	0	1	0
Configuration		LTR			LTR	

Delay, Queue Length, and Level of Service

Approach	NB	SB	Westbound			Eastbound		
Movement	1	4	7	8	9	10	11	12
Lane Config	LT	LT		LTR			LTR	
v (vph)	18	3		42			28	
C(m) (vph)	1241	1152		693			583	
v/c	0.01	0.00		0.06			0.05	
95% queue length	0.04	0.01		0.19			0.15	
Control Delay	7.9	8.1		10.5			11.5	
LOS	A	A		B			B	
Approach Delay				10.5			11.5	
Approach LOS				B			B	

HCS2000: Unsignalized Intersections Release 4.1d

TWO-WAY STOP CONTROL SUMMARY

Analyst:	J.M. Mark
Agency/Co.:	Mark Engineering
Date Performed:	9/17/2009
Analysis Time Period:	Saturday Peak Hour
Intersection:	Lindsay St. & Veterans Way
Jurisdiction:	City of Kawartha Lakes
Units: U. S. Metric	
Analysis Year:	2010 Background Traffic
Project ID: Fenelone Falls TIS - D10BS	
East/West Street:	Veterans Way
North/South Street:	Lindsay Street
Intersection Orientation: NS	Study period (hrs): 0.25

Vehicle Volumes and Adjustments

Major Street: Approach	Northbound			Southbound		
Movement	1	2	3	4	5	6
	L	T	R	L	T	R
Volume	19	450	8	5	383	17
Peak-Hour Factor, PHF	0.94	0.94	0.94	0.94	0.94	0.94
Hourly Flow Rate, HFR	20	478	8	5	407	18
Percent Heavy Vehicles	0	--	--	0	--	--
Median Type/Storage	Undivided /					
RT Channelized?						
Lanes	0	2	0	0	2	0
Configuration	LT	TR		LT	TR	
Upstream Signal?	No			No		

Minor Street: Approach	Westbound			Eastbound		
Movement	7	8	9	10	11	12
	L	T	R	L	T	R
Volume	20	2	75	26	3	43
Peak Hour Factor, PHF	0.94	0.94	0.94	0.94	0.94	0.94
Hourly Flow Rate, HFR	21	2	79	27	3	45
Percent Heavy Vehicles	0	0	4	4	0	0
Percent Grade (%)		0			0	
Flared Approach: Exists?/Storage		No /			No /	
Lanes	0	1	0	0	1	0
Configuration		LTR			LTR	

Delay, Queue Length, and Level of Service

Approach	NB	SB	Westbound			Eastbound		
Movement	1	4	7	8	9	10	11	12
Lane Config	LT	LT		LTR			LTR	
v (vph)	20	5		102			75	
C(m) (vph)	1145	1087		546			454	
v/c	0.02	0.00		0.19			0.17	
95% queue length	0.05	0.01		0.68			0.59	
Control Delay	8.2	8.3		13.1			14.5	
LOS	A	A		B			B	
Approach Delay				13.1			14.5	
Approach LOS				B			B	

HCS2000: Unsignalized Intersections Release 4.1d

TWO-WAY STOP CONTROL SUMMARY

Analyst: J.M. Mark
Agency/Co.: Mark Engineering
Date Performed: 11/17/2009
Analysis Time Period: Weekday Peak Hour
Intersection: Lindsay St. & Veterans Way
Jurisdiction: City of Kawartha Lakes
Units: U. S. Metric
Analysis Year: 2010 Total Traffic
Project ID: Fenelone Falls TIS - D10TPa
East/West Street: Veterans Way
North/South Street: Lindsay Street
Intersection Orientation: NS Study period (hrs): 0.25

Vehicle Volumes and Adjustments

Major Street: Approach	Northbound			Southbound		
Movement	1	2	3	4	5	6
	L	T	R	L	T	R
Volume	139	438	10	3	341	113
Peak-Hour Factor, PHF	0.94	0.94	0.94	0.94	0.94	0.94
Hourly Flow Rate, HFR	147	465	10	3	362	120
Percent Heavy Vehicles	0	--	--	0	--	--
Median Type/Storage	Undivided /					
RT Channelized?						
Lanes	0	2	0	0	2	0
Configuration	LT	TR		LT	TR	
Upstream Signal?	No			No		

Minor Street: Approach	Westbound			Eastbound		
Movement	7	8	9	10	11	12
	L	T	R	L	T	R
Volume	4	1	35	109	1	133
Peak Hour Factor, PHF	0.94	0.94	0.94	0.94	0.94	0.94
Hourly Flow Rate, HFR	4	1	37	115	1	141
Percent Heavy Vehicles	0	0	3	0	0	6
Percent Grade (%)		0			0	
Flared Approach: Exists?/Storage		No /			No /	
Lanes	0	1	0	1	1	0
Configuration		LTR		L		TR

Delay, Queue Length, and Level of Service

Approach	NB	SB	Westbound			Eastbound		
Movement	1	4	7	8	9	10	11	12
Lane Config	LT	LT		LTR		L		TR
v (vph)	147	3		42		115		142
C(m) (vph)	1091	1098		519		183		726
v/c	0.13	0.00		0.08		0.63		0.20
95% queue length	0.47	0.01		0.26		3.57		0.72
Control Delay	8.8	8.3		12.5		53.1		11.2
LOS	A	A		B		F		B
Approach Delay				12.5			29.9	
Approach LOS				B			D	

HCS2000: Unsignalized Intersections Release 4.1d

TWO-WAY STOP CONTROL SUMMARY

Analyst:	J.M. Mark
Agency/Co.:	Mark Engineering
Date Performed:	11/17/2009
Analysis Time Period:	Saturday Inbound Peak Hour
Intersection:	Lindsay St. & Veterans Way
Jurisdiction:	City of Kawartha Lakes
Units: U. S. Metric	
Analysis Year:	2010 Total Traffic
Project ID: Fenelone Falls TIS - D10TSa	
East/West Street:	Veterans Way
North/South Street:	Lindsay Street
Intersection Orientation: NS	Study period (hrs): 0.25

Vehicle Volumes and Adjustments

Major Street: Approach	Northbound			Southbound		
Movement	1	2	3	4	5	6
	L	T	R	L	T	R
Volume	183	517	8	5	455	195
Peak-Hour Factor, PHF	0.94	0.94	0.94	0.94	0.94	0.94
Hourly Flow Rate, HFR	194	550	8	5	484	207
Percent Heavy Vehicles	0	--	--	0	--	--
Median Type/Storage	Undivided /					
RT Channelized?						
Lanes	0	2	0	0	2	0
Configuration		LT	TR		LT	TR
Upstream Signal?		No			No	

Minor Street: Approach	Westbound			Eastbound		
Movement	7	8	9	10	11	12
	L	T	R	L	T	R
Volume	20	2	75	97	3	113
Peak Hour Factor, PHF	0.94	0.94	0.94	0.94	0.94	0.94
Hourly Flow Rate, HFR	21	2	79	103	3	120
Percent Heavy Vehicles	0	0	4	4	0	0
Percent Grade (%)		0			0	
Flared Approach: Exists?/Storage		No /			No /	
Lanes	0	1	0	1	1	0
Configuration		LTR		L		TR

Delay, Queue Length, and Level of Service

Approach	NB	SB	Westbound			Eastbound		
Movement	1	4	7	8	9	10	11	12
Lane Config	LT	LT		LTR		L		TR
v (vph)	194	5		102		103		123
C(m) (vph)	913	1023		287		90		570
v/c	0.21	0.00		0.36		1.14		0.22
95% queue length	0.80	0.01		1.55		7.08		0.81
Control Delay	10.0+	8.5		24.3		224.7		13.0
LOS	B	A		C		F		B
Approach Delay				24.3			109.5	
Approach LOS				C			F	

HCS2000: Unsignalized Intersections Release 4.1d

TWO-WAY STOP CONTROL SUMMARY

Analyst:	J.M. Mark
Agency/Co.:	Mark Engineering
Date Performed:	11/17/2009
Analysis Time Period:	Saturday Outbound Peak Hour
Intersection:	Lindsay St. & Veterans Way
Jurisdiction:	City of Kawartha Lakes
Units: U. S. Metric	
Analysis Year:	2010 Total Traffic
Project ID: Fenelone Falls TIS - D10TTa	
East/West Street:	Veterans Way
North/South Street:	Lindsay Street
Intersection Orientation: NS	Study period (hrs): 0.25

Vehicle Volumes and Adjustments

Major Street: Approach	Northbound			Southbound		
Movement	1	2	3	4	5	6
	L	T	R	L	T	R
Volume	96	517	8	5	455	82
Peak-Hour Factor, PHF	0.94	0.94	0.94	0.94	0.94	0.94
Hourly Flow Rate, HFR	102	550	8	5	484	87
Percent Heavy Vehicles	0	--	--	0	--	--
Median Type/Storage	Undivided /					
RT Channelized?						
Lanes	0	2	0	0	2	0
Configuration	LT	TR		LT	TR	
Upstream Signal?	No			No		

Minor Street: Approach	Westbound			Eastbound		
Movement	7	8	9	10	11	12
	L	T	R	L	T	R
Volume	20	2	75	261	3	240
Peak Hour Factor, PHF	0.94	0.94	0.94	0.94	0.94	0.94
Hourly Flow Rate, HFR	21	2	79	277	3	255
Percent Heavy Vehicles	0	0	4	4	0	0
Percent Grade (%)		0			0	
Flared Approach: Exists?/Storage		No /			No /	
Lanes	0	1	0	1	1	0
Configuration		LTR		L		TR

Delay, Queue Length, and Level of Service

Approach	NB	SB	Westbound			Eastbound		
Movement	1	4	7	8	9	10	11	12
Lane Config	LT	LT		LTR		L		TR
v (vph)	102	5		102		277		258
C(m) (vph)	1012	1023		329		152		686
v/c	0.10	0.00		0.31		1.82		0.38
95% queue length	0.34	0.01		1.29		20.65		1.75
Control Delay	9.0	8.5		20.8		445.4		13.4
LOS	A	A		C		F		B
Approach Delay				20.8			237.0	
Approach LOS				C			F	

HCS2000: Signalized Intersections Release 4.1d

Analyst: J.M. Mark
Agency: Mark Engineering
Date: 11/17/2009
Period: Weekday Peak Hour
Project ID: Fenelon Falls TIS - D10TPs
E/W St: Veterans Way

Inter.: Lindsay St. & Veterans Way
Area Type: All other areas
Jurisd: City of Kawartha Lakes
Year: 2010 Total Traffic
N/S St: Lindsay Street

SIGNALIZED INTERSECTION SUMMARY

	Eastbound			Westbound			Northbound			Southbound		
	L	T	R	L	T	R	L	T	R	L	T	R
No. Lanes	1	1	0	0	1	0	0	2	0	0	2	0
LGConfig	L	TR			LTR			LTR			LTR	
Volume	109	1	133	4	1	35	139	438	10	3	341	113
Lane Width	3.6	3.6			3.6			3.6			3.6	
RTOR Vol			0			0			0			0

Duration 0.25 Area Type: All other areas

Signal Operations

Phase Combination	1	2	3	4	5	6	7	8
EB Left	A				NB Left	A		
Thru	A				Thru	A		
Right	A				Right	A		
Peds	X				Peds	X		
WB Left	A				SB Left	A		
Thru	A				Thru	A		
Right	A				Right	A		
Peds	X				Peds	X		
NB Right					EB Right			
SB Right					WB Right			
Green	11.7				36.3			
Yellow	4.0				4.0			
All Red	2.0				2.0			

Cycle Length: 60.0 secs

Intersection Performance Summary

Appr/ Lane Grp	Lane Group Capacity	Adj Sat Flow Rate (s)	Ratios v/c	Ratios g/C	Lane Group Delay	Lane Group LOS	Approach Delay	Approach LOS
Eastbound								
L	270	1386	0.43	0.19	22.3	C		
TR	297	1522	0.48	0.19	22.7	C	22.5	C
Westbound								
LTR	307	1575	0.14	0.19	20.2	C	20.2	C
Northbound								
LTR	1558	2576	0.40	0.60	6.4	A	6.4	A
Southbound								
LTR	1959	3238	0.25	0.60	5.6	A	5.6	A

Intersection Delay = 9.4 (sec/veh) Intersection LOS = A

Sum of flow ratios for critical lane groups, Yc = Sum (v/s) = 0.34
Total lost time per cycle, L = 12.00 sec
Critical flow rate to capacity ratio, Xc = (Yc)(C)/(C-L) = 0.42

HCS2000: Signalized Intersections Release 4.1d

Analyst: J.M. Mark
Agency: Mark Engineering
Date: 11/17/2009
Period: Satuday Inbound Peak Hour
Project ID: Fenelon Falls TIS - D10TSs
E/W St: Veterans Way

Inter.: Lindsay St. & Veterans Way
Area Type: All other areas
Jurisd: City of Kawartha Lakes
Year: 2010 Total Traffic
N/S St: Lindsay Street

SIGNALIZED INTERSECTION SUMMARY

	Eastbound			Westbound			Northbound			Southbound		
	L	T	R	L	T	R	L	T	R	L	T	R
No. Lanes	1	1	0	0	1	0	0	2	0	0	2	0
LGConfig	L	TR			LTR			LTR			LTR	
Volume	97	3	113	20	2	75	183	517	8	5	455	195
Lane Width	3.6	3.6			3.6			3.6			3.6	
RTOR Vol			0			0			0			0

Duration 0.25 Area Type: All other areas

Signal Operations

Phase Combination	1	2	3	4	5	6	7	8
EB Left	A				NB Left	A		
Thru	A				Thru	A		
Right	A				Right	A		
Peds	X				Peds	X		
WB Left	A				SB Left	A		
Thru	A				Thru	A		
Right	A				Right	A		
Peds	X				Peds	X		
NB Right					EB Right			
SB Right					WB Right			
Green	11.8				36.2			
Yellow	4.0				4.0			
All Red	2.0				2.0			

Cycle Length: 60.0 secs

Intersection Performance Summary

Appr/ Lane Grp	Lane Group Capacity	Adj Sat Flow Rate (s)	Ratios v/c	Ratios g/C	Lane Group Delay	Lane Group LOS	Approach Delay	Approach LOS
Eastbound								
L	248	1259	0.43	0.20	22.4	C		
TR	318	1617	0.40	0.20	21.8	C	22.1	C
Westbound								
LTR	294	1497	0.36	0.20	21.6	C	21.6	C
Northbound								
LTR	1390	2304	0.56	0.60	7.6	A	7.6	A
Southbound								
LTR	1929	3198	0.37	0.60	6.2	A	6.2	A

Intersection Delay = 9.7 (sec/veh) Intersection LOS = A

Sum of flow ratios for critical lane groups, Yc = Sum (v/s) = 0.42
Total lost time per cycle, L = 12.00 sec
Critical flow rate to capacity ratio, Xc = (Yc)(C)/(C-L) = 0.53

HCS2000: Signalized Intersections Release 4.1d

Analyst: J.M. Mark
Agency: Mark Engineering
Date: 11/17/2009
Period: Satuday Outbound Peak Hour
Project ID: Fenelon Falls TIS - D10TTs
E/W St: Veterans Way

Inter.: Lindsay St. & Veterans Way
Area Type: All other areas
Jurisd: City of Kawartha Lakes
Year: 2010 Total Traffic
N/S St: Lindsay Street

SIGNALIZED INTERSECTION SUMMARY

	Eastbound			Westbound			Northbound			Southbound		
	L	T	R	L	T	R	L	T	R	L	T	R
No. Lanes	1	1	0	0	1	0	0	2	0	0	2	0
LGConfig	L	TR			LTR			LTR			LTR	
Volume	261	3	240	20	2	75	96	517	8	5	455	82
Lane Width	3.6	3.6			3.6			3.6			3.6	
RTOR Vol			0			0			0			0

Duration 0.25 Area Type: All other areas

Signal Operations

Phase Combination	1	2	3	4	5	6	7	8
EB Left	A				NB Left	A		
Thru	A				Thru	A		
Right	A				Right	A		
Peds	X				Peds	X		
WB Left	A				SB Left	A		
Thru	A				Thru	A		
Right	A				Right	A		
Peds	X				Peds	X		
NB Right					EB Right			
SB Right					WB Right			
Green	23.8				29.2			
Yellow	4.0				4.0			
All Red	2.0				2.0			

Cycle Length: 65.0 secs

Intersection Performance Summary

Appr/ Lane Grp	Lane Group Capacity	Adj Sat Flow Rate (s)	Ratios v/c	Ratios g/C	Lane Group Delay	Lane Group LOS	Approach Delay	Approach LOS
Eastbound								
L	460	1257	0.62	0.37	19.6	B		
TR	592	1616	0.45	0.37	16.2	B	17.9	B
Westbound								
LTR	550	1501	0.19	0.37	14.2	B	14.2	B
Northbound								
LTR	1213	2700	0.56	0.45	13.8	B	13.8	B
Southbound								
LTR	1479	3292	0.40	0.45	12.2	B	12.2	B

Intersection Delay = 14.5 (sec/veh) Intersection LOS = B

Sum of flow ratios for critical lane groups, Yc = Sum (v/s) = 0.48
Total lost time per cycle, L = 12.00 sec
Critical flow rate to capacity ratio, Xc = (Yc)(C)/(C-L) = 0.59

HCS2000: Unsignalized Intersections Release 4.1d

TWO-WAY STOP CONTROL SUMMARY

Analyst:	J.M. Mark
Agency/Co.:	Mark Engineering
Date Performed:	9/17/2009
Analysis Time Period:	Weekday Peak Hour
Intersection:	Lindsay St. & Veterans Way
Jurisdiction:	City of Kawartha Lakes
Units: U. S. Metric	
Analysis Year:	2015 Background Traffic
Project ID: Fenelone Falls TIS - D15BP	
East/West Street:	Veterans Way
North/South Street:	Lindsay Street
Intersection Orientation: NS	Study period (hrs): 0.25

Vehicle Volumes and Adjustments

Major Street: Approach	Northbound			Southbound		
Movement	1	2	3	4	5	6
	L	T	R	L	T	R
Volume	19	423	11	3	323	21
Peak-Hour Factor, PHF	0.94	0.94	0.94	0.94	0.94	0.94
Hourly Flow Rate, HFR	20	450	11	3	343	22
Percent Heavy Vehicles	0	--	--	0	--	--
Median Type/Storage	Undivided /					
RT Channelized?						
Lanes	0	2	0	0	2	0
Configuration	LT	TR		LT	TR	
Upstream Signal?	No			No		

Minor Street: Approach	Westbound			Eastbound		
Movement	7	8	9	10	11	12
	L	T	R	L	T	R
Volume	5	1	38	9	1	17
Peak Hour Factor, PHF	0.94	0.94	0.94	0.94	0.94	0.94
Hourly Flow Rate, HFR	5	1	40	9	1	18
Percent Heavy Vehicles	0	0	3	0	0	6
Percent Grade (%)		0			0	
Flared Approach: Exists?/Storage		No /			No /	
Lanes	0	1	0	0	1	0
Configuration		LTR			LTR	

Delay, Queue Length, and Level of Service

Approach	NB	SB	Westbound			Eastbound		
Movement	1	4	7	8	9	10	11	12
Lane Config	LT	LT		LTR			LTR	
v (vph)	20	3		46			28	
C(m) (vph)	1201	1111		651			541	
v/c	0.02	0.00		0.07			0.05	
95% queue length	0.05	0.01		0.23			0.16	
Control Delay	8.0	8.2		10.9			12.0	
LOS	A	A		B			B	
Approach Delay				10.9			12.0	
Approach LOS				B			B	

HCS2000: Unsignalized Intersections Release 4.1d

TWO-WAY STOP CONTROL SUMMARY

Analyst:	J.M. Mark
Agency/Co.:	Mark Engineering
Date Performed:	9/17/2009
Analysis Time Period:	Saturday Peak Hour
Intersection:	Lindsay St. & Veterans Way
Jurisdiction:	City of Kawartha Lakes
Units: U. S. Metric	
Analysis Year:	2015 Background Traffic
Project ID: Fenelone Falls TIS - D15BS	
East/West Street:	Veterans Way
North/South Street:	Lindsay Street
Intersection Orientation: NS	Study period (hrs): 0.25

Vehicle Volumes and Adjustments

Major Street: Approach	Northbound			Southbound		
Movement	1	2	3	4	5	6
	L	T	R	L	T	R
Volume	19	450	8	5	383	17
Peak-Hour Factor, PHF	0.94	0.94	0.94	0.94	0.94	0.94
Hourly Flow Rate, HFR	20	478	8	5	407	18
Percent Heavy Vehicles	0	--	--	0	--	--
Median Type/Storage	Undivided /					
RT Channelized?						
Lanes	0	2	0	0	2	0
Configuration	LT	TR		LT	TR	
Upstream Signal?	No			No		

Minor Street: Approach	Westbound			Eastbound		
Movement	7	8	9	10	11	12
	L	T	R	L	T	R
Volume	20	2	75	26	3	43
Peak Hour Factor, PHF	0.94	0.94	0.94	0.94	0.94	0.94
Hourly Flow Rate, HFR	21	2	79	27	3	45
Percent Heavy Vehicles	0	0	4	4	0	0
Percent Grade (%)		0			0	
Flared Approach: Exists?/Storage		No /			No /	
Lanes	0	1	0	0	1	0
Configuration		LTR			LTR	

Delay, Queue Length, and Level of Service

Approach	NB	SB	Westbound			Eastbound		
Movement	1	4	7	8	9	10	11	12
Lane Config	LT	LT		LTR			LTR	
v (vph)	20	5		102			75	
C(m) (vph)	1145	1087		546			454	
v/c	0.02	0.00		0.19			0.17	
95% queue length	0.05	0.01		0.68			0.59	
Control Delay	8.2	8.3		13.1			14.5	
LOS	A	A		B			B	
Approach Delay				13.1			14.5	
Approach LOS				B			B	

HCS2000: Unsignalized Intersections Release 4.1d

TWO-WAY STOP CONTROL SUMMARY

Analyst: J.M. Mark
Agency/Co.: Mark Engineering
Date Performed: 11/17/2009
Analysis Time Period: Weekday Peak Hour
Intersection: Lindsay St. & Veterans Way
Jurisdiction: City of Kawartha Lakes
Units: U. S. Metric
Analysis Year: 2015 Total Traffic
Project ID: Fenelone Falls TIS - D15TP
East/West Street: Veterans Way
North/South Street: Lindsay Street
Intersection Orientation: NS Study period (hrs): 0.25

Vehicle Volumes and Adjustments

Major Street: Approach	Northbound			Southbound		
Movement	1	2	3	4	5	6
	L	T	R	L	T	R
Volume	141	477	11	3	371	115
Peak-Hour Factor, PHF	0.94	0.94	0.94	0.94	0.94	0.94
Hourly Flow Rate, HFR	150	507	11	3	394	122
Percent Heavy Vehicles	0	--	--	0	--	--
Median Type/Storage	Undivided /					
RT Channelized?						
Lanes	0	2	0	0	2	0
Configuration	LT	TR		LT	TR	
Upstream Signal?	No			No		

Minor Street: Approach	Westbound			Eastbound		
Movement	7	8	9	10	11	12
	L	T	R	L	T	R
Volume	4	1	35	110	1	135
Peak Hour Factor, PHF	0.94	0.94	0.94	0.94	0.94	0.94
Hourly Flow Rate, HFR	4	1	37	117	1	143
Percent Heavy Vehicles	0	0	3	0	0	6
Percent Grade (%)		0			0	
Flared Approach: Exists?/Storage		No /			No /	
Lanes	0	1	0	1	1	0
Configuration		LTR		L		TR

Delay, Queue Length, and Level of Service

Approach	NB	SB	Westbound			Eastbound		
Movement	1	4	7	8	9	10	11	12
Lane Config	LT	LT		LTR		L		TR
v (vph)	150	3		42		117		144
C(m) (vph)	1060	1058		484		164		706
v/c	0.14	0.00		0.09		0.71		0.20
95% queue length	0.49	0.01		0.28		4.31		0.76
Control Delay	9.0	8.4		13.1		68.3		11.4
LOS	A	A		B		F		B
Approach Delay				13.1			36.9	
Approach LOS				B			E	

HCS2000: Unsignalized Intersections Release 4.1d

TWO-WAY STOP CONTROL SUMMARY

Analyst:	J.M. Mark
Agency/Co.:	Mark Engineering
Date Performed:	11/17/2009
Analysis Time Period:	Saturday Inbound Peak Hour
Intersection:	Lindsay St. & Veterans Way
Jurisdiction:	City of Kawartha Lakes
Units: U. S. Metric	
Analysis Year:	2015 Total Traffic
Project ID: Fenelone Falls TIS - D15TS	
East/West Street:	Veterans Way
North/South Street:	Lindsay Street
Intersection Orientation: NS	Study period (hrs): 0.25

Vehicle Volumes and Adjustments

Major Street: Approach	Northbound			Southbound		
Movement	1	2	3	4	5	6
	L	T	R	L	T	R
Volume	185	564	9	6	494	197
Peak-Hour Factor, PHF	0.94	0.94	0.94	0.94	0.94	0.94
Hourly Flow Rate, HFR	196	600	9	6	525	209
Percent Heavy Vehicles	0	--	--	0	--	--
Median Type/Storage	Undivided /					
RT Channelized?						
Lanes	0	2	0	0	2	0
Configuration	LT	TR		LT	TR	
Upstream Signal?	No			No		

Minor Street: Approach	Westbound			Eastbound		
Movement	7	8	9	10	11	12
	L	T	R	L	T	R
Volume	23	2	83	99	3	117
Peak Hour Factor, PHF	0.94	0.94	0.94	0.94	0.94	0.94
Hourly Flow Rate, HFR	24	2	88	105	3	124
Percent Heavy Vehicles	0	0	4	4	0	0
Percent Grade (%)		0			0	
Flared Approach: Exists?/Storage		No /			No /	
Lanes	0	1	0	1	1	0
Configuration		LTR		L		TR

Delay, Queue Length, and Level of Service

Approach	NB	SB	Westbound			Eastbound		
Movement	1	4	7	8	9	10	11	12
Lane Config	LT	LT		LTR		L		TR
v (vph)	196	6		114		105		127
C(m) (vph)	880	979		253		77		544
v/c	0.22	0.01		0.45		1.36		0.23
95% queue length	0.85	0.02		2.19		8.26		0.90
Control Delay	10.3	8.7		30.4		321.7		13.6
LOS	B	A		D		F		B
Approach Delay				30.4			153.0	
Approach LOS				D			F	

HCS2000: Unsignalized Intersections Release 4.1d

TWO-WAY STOP CONTROL SUMMARY

Analyst:	J.M. Mark
Agency/Co.:	Mark Engineering
Date Performed:	11/17/2009
Analysis Time Period:	Saturday Outbound Peak Hour
Intersection:	Lindsay St. & Veterans Way
Jurisdiction:	City of Kawartha Lakes
Units: U. S. Metric	
Analysis Year:	2015 Total Traffic
Project ID: Fenelone Falls TIS - D15TT	
East/West Street:	Veterans Way
North/South Street:	Lindsay Street
Intersection Orientation: NS	Study period (hrs): 0.25

Vehicle Volumes and Adjustments

Major Street: Approach	Northbound			Southbound		
Movement	1	2	3	4	5	6
	L	T	R	L	T	R
Volume	98	564	9	6	494	84
Peak-Hour Factor, PHF	0.94	0.94	0.94	0.94	0.94	0.94
Hourly Flow Rate, HFR	104	600	9	6	525	89
Percent Heavy Vehicles	0	--	--	0	--	--
Median Type/Storage	Undivided /					
RT Channelized?						
Lanes	0	2	0	0	2	0
Configuration		LT	TR		LT	TR
Upstream Signal?		No			No	

Minor Street: Approach	Westbound			Eastbound		
Movement	7	8	9	10	11	12
	L	T	R	L	T	R
Volume	23	2	83	263	3	244
Peak Hour Factor, PHF	0.94	0.94	0.94	0.94	0.94	0.94
Hourly Flow Rate, HFR	24	2	88	279	3	259
Percent Heavy Vehicles	0	0	4	4	0	0
Percent Grade (%)		0			0	
Flared Approach: Exists?/Storage		No /			No /	
Lanes	0	1	0	1	1	0
Configuration		LTR			L	TR

Delay, Queue Length, and Level of Service

Approach	NB	SB	Westbound			Eastbound		
Movement	1	4	7	8	9	10	11	12
Lane Config	LT	LT		LTR		L		TR
v (vph)	104	6		114		279		262
C(m) (vph)	975	979		290		130		661
v/c	0.11	0.01		0.39		2.15		0.40
95% queue length	0.36	0.02		1.80		23.15		1.90
Control Delay	9.1	8.7		25.2		595.9		14.0
LOS	A	A		D		F		B
Approach Delay				25.2			314.1	
Approach LOS				D			F	

HCS2000: Signalized Intersections Release 4.1d

Analyst: J.M. Mark
Agency: Mark Engineering
Date: 11/17/2009
Period: Weekday Peak Hour
Project ID: Fenelon Falls TIS - D15TPs
E/W St: Veterans Way

Inter.: Lindsay St. & Veterans Way
Area Type: All other areas
Jurisd: City of Kawartha Lakes
Year: 2015 Total Traffic
N/S St: Lindsay Street

SIGNALIZED INTERSECTION SUMMARY

	Eastbound			Westbound			Northbound			Southbound		
	L	T	R	L	T	R	L	T	R	L	T	R
No. Lanes	1	1	0	0	1	0	0	2	0	0	2	0
LGConfig	L	TR			LTR			LTR			LTR	
Volume	110	1	135	5	1	38	141	477	11	3	371	115
Lane Width	3.6	3.6			3.6			3.6			3.6	
RTOR Vol			0			0			0			0

Duration 0.25 Area Type: All other areas

Signal Operations

Phase Combination	1	2	3	4	5	6	7	8
EB Left	A				NB Left	A		
Thru	A				Thru	A		
Right	A				Right	A		
Peds	X				Peds	X		
WB Left	A				SB Left	A		
Thru	A				Thru	A		
Right	A				Right	A		
Peds	X				Peds	X		
NB Right					EB Right			
SB Right					WB Right			
Green	11.7				36.3			
Yellow	4.0				4.0			
All Red	2.0				2.0			

Cycle Length: 60.0 secs

Intersection Performance Summary

Appr/ Lane Grp	Lane Group Capacity	Adj Sat Flow Rate (s)	Ratios v/c	Ratios g/C	Lane Group Delay	Lane Group LOS	Approach Delay	Approach LOS
Eastbound								
L	269	1381	0.43	0.19	22.4	C		
TR	297	1521	0.49	0.19	22.8	C	22.6	C
Westbound								
LTR	306	1568	0.15	0.19	20.3	C	20.3	C
Northbound								
LTR	1550	2562	0.43	0.60	6.5	A	6.5	A
Southbound								
LTR	1962	3243	0.27	0.60	5.6	A	5.6	A

Intersection Delay = 9.5 (sec/veh) Intersection LOS = A

Sum of flow ratios for critical lane groups, Yc = Sum (v/s) = 0.36
Total lost time per cycle, L = 12.00 sec
Critical flow rate to capacity ratio, Xc = (Yc)(C)/(C-L) = 0.45

HCS2000: Signalized Intersections Release 4.1d

Analyst: J.M. Mark
Agency: Mark Engineering
Date: 11/17/2009
Period: Satuday Inbound Peak Hour
Project ID: Fenelon Falls TIS - D15TSs
E/W St: Veterans Way

Inter.: Lindsay St. & Veterans Way
Area Type: All other areas
Jurisd: City of Kawartha Lakes
Year: 2015 Total Traffic
N/S St: Lindsay Street

SIGNALIZED INTERSECTION SUMMARY

	Eastbound			Westbound			Northbound			Southbound		
	L	T	R	L	T	R	L	T	R	L	T	R
No. Lanes	1	1	0	0	1	0	0	2	0	0	2	0
LGConfig	L	TR			LTR			LTR			LTR	
Volume	99	3	117	23	2	83	185	564	9	6	494	197
Lane Width	3.6	3.6			3.6			3.6			3.6	
RTOR Vol			0			0			0			0

Duration 0.25 Area Type: All other areas

Signal Operations

Phase Combination	1	2	3	4	5	6	7	8
EB Left	A				NB Left	A		
Thru	A				Thru	A		
Right	A				Right	A		
Peds	X				Peds	X		
WB Left	A				SB Left	A		
Thru	A				Thru	A		
Right	A				Right	A		
Peds	X				Peds	X		
NB Right					EB Right			
SB Right					WB Right			
Green	11.8				36.2			
Yellow	4.0				4.0			
All Red	2.0				2.0			

Cycle Length: 60.0 secs

Intersection Performance Summary

Appr/ Lane Grp	Lane Group Capacity	Adj Sat Flow Rate (s)	Ratios v/c	Ratios g/C	Lane Group Delay	Lane Group LOS	Approach Delay	Approach LOS
Eastbound								
L	250	1270	0.44	0.20	22.4	C		
TR	319	1621	0.41	0.20	21.9	C	22.2	C
Westbound								
LTR	293	1489	0.40	0.20	21.9	C	21.9	C
Northbound								
LTR	1373	2275	0.61	0.60	8.2	A	8.2	A
Southbound								
LTR	1931	3200	0.40	0.60	6.3	A	6.3	A

Intersection Delay = 10.0+ (sec/veh) Intersection LOS = B

Sum of flow ratios for critical lane groups, Yc = Sum (v/s) = 0.45
Total lost time per cycle, L = 12.00 sec
Critical flow rate to capacity ratio, Xc = (Yc)(C)/(C-L) = 0.56

HCS2000: Signalized Intersections Release 4.1d

Analyst: J.M. Mark
Agency: Mark Engineering
Date: 11/17/2009
Period: Satuday Outbound Peak Hour
Project ID: Fenelon Falls TIS - D15TTs
E/W St: Veterans Way

Inter.: Lindsay St. & Veterans Way
Area Type: All other areas
Jurisd: City of Kawartha Lakes
Year: 2015 Total Traffic
N/S St: Lindsay Street

SIGNALIZED INTERSECTION SUMMARY

	Eastbound			Westbound			Northbound			Southbound		
	L	T	R	L	T	R	L	T	R	L	T	R
No. Lanes	1	1	0	0	1	0	0	2	0	0	2	0
LGConfig	L	TR			LTR			LTR			LTR	
Volume	263	3	244	23	2	83	98	564	9	6	494	84
Lane Width	3.6	3.6			3.6			3.6			3.6	
RTOR Vol			0			0			0			0

Duration 0.25 Area Type: All other areas

Signal Operations

Phase Combination	1	2	3	4	5	6	7	8
EB Left	A				NB Left	A		
Thru	A				Thru	A		
Right	A				Right	A		
Peds	X				Peds	X		
WB Left	A				SB Left	A		
Thru	A				Thru	A		
Right	A				Right	A		
Peds	X				Peds	X		
NB Right					EB Right			
SB Right					WB Right			
Green	23.8				29.2			
Yellow	4.0				4.0			
All Red	2.0				2.0			

Cycle Length: 65.0 secs

Intersection Performance Summary

Appr/ Lane Grp	Lane Group Capacity	Adj Sat Flow Rate (s)	Ratios v/c	Ratios g/C	Lane Group Delay	Lane Group LOS	Approach Delay	Approach LOS
Eastbound								
L	455	1244	0.64	0.37	19.9	B		
TR	592	1618	0.46	0.37	16.2	B	18.1	B
Westbound								
LTR	546	1492	0.22	0.37	14.4	B	14.4	B
Northbound								
LTR	1183	2634	0.62	0.45	14.7	B	14.7	B
Southbound								
LTR	1477	3287	0.43	0.45	12.5	B	12.5	B

Intersection Delay = 14.9 (sec/veh) Intersection LOS = B

Sum of flow ratios for critical lane groups, Yc = Sum (v/s) = 0.51
Total lost time per cycle, L = 12.00 sec
Critical flow rate to capacity ratio, Xc = (Yc)(C)/(C-L) = 0.63

HCS2000: Unsignalized Intersections Release 4.1d

TWO-WAY STOP CONTROL SUMMARY

Analyst: J.M. Mark
Agency/Co.: Mark Engineering
Date Performed: 9/17/2009
Analysis Time Period: Weekday Peak Hour
Intersection: Lindsay St. & Veterans Way
Jurisdiction: City of Kawartha Lakes
Units: U. S. Metric
Analysis Year: 2020 Background Traffic
Project ID: Fenelone Falls TIS - D20BP
East/West Street: Veterans Way
North/South Street: Lindsay Street
Intersection Orientation: NS Study period (hrs): 0.25

Vehicle Volumes and Adjustments

Major Street: Approach	Northbound			Southbound		
Movement	1	2	3	4	5	6
	L	T	R	L	T	R
Volume	21	468	12	4	357	24
Peak-Hour Factor, PHF	0.94	0.94	0.94	0.94	0.94	0.94
Hourly Flow Rate, HFR	22	497	12	4	379	25
Percent Heavy Vehicles	0	--	--	0	--	--
Median Type/Storage	Undivided /					
RT Channelized?						
Lanes	0	2	0	0	2	0
Configuration	LT	TR		LT	TR	
Upstream Signal?	No			No		

Minor Street: Approach	Westbound			Eastbound		
Movement	7	8	9	10	11	12
	L	T	R	L	T	R
Volume	5	1	42	11	1	21
Peak Hour Factor, PHF	0.94	0.94	0.94	0.94	0.94	0.94
Hourly Flow Rate, HFR	5	1	44	11	1	22
Percent Heavy Vehicles	0	0	3	0	0	6
Percent Grade (%)		0			0	
Flared Approach: Exists?/Storage		No /			No /	
Lanes	0	1	0	0	1	0
Configuration		LTR			LTR	

Delay, Queue Length, and Level of Service

Approach	NB	SB	Westbound			Eastbound		
Movement	1	4	7	8	9	10	11	12
Lane Config	LT	LT		LTR			LTR	
v (vph)	22	4		50			34	
C(m) (vph)	1166	1066		621			504	
v/c	0.02	0.00		0.08			0.07	
95% queue length	0.06	0.01		0.26			0.22	
Control Delay	8.1	8.4		11.3			12.7	
LOS	A	A		B			B	
Approach Delay				11.3			12.7	
Approach LOS				B			B	

HCS2000: Unsignalized Intersections Release 4.1d

TWO-WAY STOP CONTROL SUMMARY

Analyst:	J.M. Mark
Agency/Co.:	Mark Engineering
Date Performed:	9/17/2009
Analysis Time Period:	Saturday Peak Hour
Intersection:	Lindsay St. & Veterans Way
Jurisdiction:	City of Kawartha Lakes
Units: U. S. Metric	
Analysis Year:	2020 Background Traffic
Project ID: Fenelone Falls TIS - D20BS	
East/West Street:	Veterans Way
North/South Street:	Lindsay Street
Intersection Orientation: NS	Study period (hrs): 0.25

Vehicle Volumes and Adjustments

Major Street: Approach	Northbound			Southbound		
Movement	1	2	3	4	5	6
	L	T	R	L	T	R
Volume	24	548	10	6	466	21
Peak-Hour Factor, PHF	0.94	0.94	0.94	0.94	0.94	0.94
Hourly Flow Rate, HFR	25	582	10	6	495	22
Percent Heavy Vehicles	0	--	--	0	--	--
Median Type/Storage	Undivided /					
RT Channelized?						
Lanes	0	2	0	0	2	0
Configuration	LT	TR		LT	TR	
Upstream Signal?	No			No		

Minor Street: Approach	Westbound			Eastbound		
Movement	7	8	9	10	11	12
	L	T	R	L	T	R
Volume	25	2	92	31	4	52
Peak Hour Factor, PHF	0.94	0.94	0.94	0.94	0.94	0.94
Hourly Flow Rate, HFR	26	2	97	32	4	55
Percent Heavy Vehicles	0	0	4	4	0	0
Percent Grade (%)		0			0	
Flared Approach: Exists?/Storage		No /			No /	
Lanes	0	1	0	0	1	0
Configuration		LTR			LTR	

Delay, Queue Length, and Level of Service

Approach	NB	SB	Westbound			Eastbound		
Movement	1	4	7	8	9	10	11	12
Lane Config	LT	LT		LTR			LTR	
v (vph)	25	6		125			91	
C(m) (vph)	1059	994		456			363	
v/c	0.02	0.01		0.27			0.25	
95% queue length	0.07	0.02		1.10			0.98	
Control Delay	8.5	8.6		15.8			18.2	
LOS	A	A		C			C	
Approach Delay				15.8			18.2	
Approach LOS				C			C	

HCS2000: Unsignalized Intersections Release 4.1d

TWO-WAY STOP CONTROL SUMMARY

Analyst: J.M. Mark
Agency/Co.: Mark Engineering
Date Performed: 11/17/2009
Analysis Time Period: Weekday Peak Hour
Intersection: Lindsay St. & Veterans Way
Jurisdiction: City of Kawartha Lakes
Units: U. S. Metric
Analysis Year: 2020 Total Traffic
Project ID: Fenelone Falls TIS - D20TP
East/West Street: Veterans Way
North/South Street: Lindsay Street
Intersection Orientation: NS Study period (hrs): 0.25

Vehicle Volumes and Adjustments

Major Street: Approach	Northbound			Southbound		
Movement	1	2	3	4	5	6
	L	T	R	L	T	R
Volume	143	522	12	4	405	118
Peak-Hour Factor, PHF	0.94	0.94	0.94	0.94	0.94	0.94
Hourly Flow Rate, HFR	152	555	12	4	430	125
Percent Heavy Vehicles	0	--	--	0	--	--
Median Type/Storage	Undivided /					
RT Channelized?						
Lanes	0	2	0	0	2	0
Configuration		LT	TR		LT	TR
Upstream Signal?		No			No	

Minor Street: Approach	Westbound			Eastbound		
Movement	7	8	9	10	11	12
	L	T	R	L	T	R
Volume	5	1	42	111	1	137
Peak Hour Factor, PHF	0.94	0.94	0.94	0.94	0.94	0.94
Hourly Flow Rate, HFR	5	1	44	118	1	145
Percent Heavy Vehicles	0	0	3	0	0	6
Percent Grade (%)		0			0	
Flared Approach: Exists?/Storage		No /			No /	
Lanes	0	1	0	1	1	0
Configuration		LTR			L	TR

Delay, Queue Length, and Level of Service

Approach	NB	SB	Westbound			Eastbound		
Movement	1	4	7	8	9	10	11	12
Lane Config	LT	LT		LTR		L		TR
v (vph)	152	4		50		118		146
C(m) (vph)	1026	1015		445		144		682
v/c	0.15	0.00		0.11		0.82		0.21
95% queue length	0.52	0.01		0.38		5.22		0.81
Control Delay	9.1	8.6		14.1		93.6		11.7
LOS	A	A		B		F		B
Approach Delay				14.1			48.3	
Approach LOS				B			E	

HCS2000: Unsignalized Intersections Release 4.1d

TWO-WAY STOP CONTROL SUMMARY

Analyst:	J.M. Mark
Agency/Co.:	Mark Engineering
Date Performed:	11/17/2009
Analysis Time Period:	Saturday Inbound Peak Hour
Intersection:	Lindsay St. & Veterans Way
Jurisdiction:	City of Kawartha Lakes
Units: U. S. Metric	
Analysis Year:	2020 Total Traffic
Project ID: Fenelone Falls TIS - D20TS	
East/West Street:	Veterans Way
North/South Street:	Lindsay Street
Intersection Orientation: NS	Study period (hrs): 0.25

Vehicle Volumes and Adjustments

Major Street: Approach	Northbound			Southbound		
Movement	1	2	3	4	5	6
	L	T	R	L	T	R
Volume	188	615	10	6	538	199
Peak-Hour Factor, PHF	0.94	0.94	0.94	0.94	0.94	0.94
Hourly Flow Rate, HFR	200	654	10	6	572	211
Percent Heavy Vehicles	0	--	--	0	--	--
Median Type/Storage	Undivided /					
RT Channelized?						
Lanes	0	2	0	0	2	0
Configuration	LT	TR		LT	TR	
Upstream Signal?	No			No		

Minor Street: Approach	Westbound			Eastbound		
Movement	7	8	9	10	11	12
	L	T	R	L	T	R
Volume	25	2	92	102	4	122
Peak Hour Factor, PHF	0.94	0.94	0.94	0.94	0.94	0.94
Hourly Flow Rate, HFR	26	2	97	108	4	129
Percent Heavy Vehicles	0	0	4	4	0	0
Percent Grade (%)		0			0	
Flared Approach: Exists?/Storage		No /			No /	
Lanes	0	1	0	1	1	0
Configuration		LTR		L		TR

Delay, Queue Length, and Level of Service

Approach	NB	SB	Westbound			Eastbound		
Movement	1	4	7	8	9	10	11	12
Lane Config	LT	LT		LTR		L		TR
v (vph)	200	6		125		108		133
C(m) (vph)	844	935		219		64		489
v/c	0.24	0.01		0.57		1.69		0.27
95% queue length	0.92	0.02		3.15		9.68		1.09
Control Delay	10.6	8.9		41.3		474.1		15.1
LOS	B	A		E		F		C
Approach Delay				41.3			220.8	
Approach LOS				E			F	

HCS2000: Unsignalized Intersections Release 4.1d

TWO-WAY STOP CONTROL SUMMARY

Analyst:	J.M. Mark
Agency/Co.:	Mark Engineering
Date Performed:	11/17/2009
Analysis Time Period:	Saturday Outbound Peak Hour
Intersection:	Lindsay St. & Veterans Way
Jurisdiction:	City of Kawartha Lakes
Units: U. S. Metric	
Analysis Year:	2020 Total Traffic
Project ID: Fenelone Falls TIS - D20TT	
East/West Street:	Veterans Way
North/South Street:	Lindsay Street
Intersection Orientation: NS	Study period (hrs): 0.25

Vehicle Volumes and Adjustments

Major Street: Approach	Northbound			Southbound		
Movement	1	2	3	4	5	6
	L	T	R	L	T	R
Volume	101	615	10	6	538	86
Peak-Hour Factor, PHF	0.94	0.94	0.94	0.94	0.94	0.94
Hourly Flow Rate, HFR	107	654	10	6	572	91
Percent Heavy Vehicles	0	--	--	0	--	--
Median Type/Storage	Undivided /					
RT Channelized?						
Lanes	0	2	0	0	2	0
Configuration	LT		TR	LT		TR
Upstream Signal?	No			No		

Minor Street: Approach	Westbound			Eastbound		
Movement	7	8	9	10	11	12
	L	T	R	L	T	R
Volume	25	2	92	266	4	249
Peak Hour Factor, PHF	0.94	0.94	0.94	0.94	0.94	0.94
Hourly Flow Rate, HFR	26	2	97	282	4	264
Percent Heavy Vehicles	0	0	4	4	0	0
Percent Grade (%)		0			0	
Flared Approach: Exists?/Storage		No /			No /	
Lanes	0	1	0	1	1	0
Configuration		LTR		L		TR

Delay, Queue Length, and Level of Service

Approach	NB	SB	Westbound			Eastbound		
Movement	1	4	7	8	9	10	11	12
Lane Config	LT	LT		LTR		L		TR
v (vph)	107	6		125		282		268
C(m) (vph)	935	935		254		110		621
v/c	0.11	0.01		0.49		2.56		0.43
95% queue length	0.39	0.02		2.51		25.63		2.17
Control Delay	9.3	8.9		32.2		791.5		15.1
LOS	A	A		D		F		C
Approach Delay				32.2			413.2	
Approach LOS				D			F	

HCS2000: Signalized Intersections Release 4.1d

Analyst: J.M. Mark
Agency: Mark Engineering
Date: 11/17/2009
Period: Weekday Peak Hour
Project ID: Fenelon Falls TIS - D20TPs
E/W St: Veterans Way

Inter.: Lindsay St. & Veterans Way
Area Type: All other areas
Jurisd: City of Kawartha Lakes
Year: 2020 Total Traffic
N/S St: Lindsay Street

SIGNALIZED INTERSECTION SUMMARY

	Eastbound			Westbound			Northbound			Southbound		
	L	T	R	L	T	R	L	T	R	L	T	R
No. Lanes	1	1	0	0	1	0	0	2	0	0	2	0
LGConfig	L	TR			LTR			LTR			LTR	
Volume	111	1	137	5	1	42	143	522	12	3	405	118
Lane Width	3.6	3.6			3.6			3.6			3.6	
RTOR Vol			0			0			0			0

Duration 0.25 Area Type: All other areas

Signal Operations

Phase Combination	1	2	3	4	5	6	7	8
EB Left	A				NB Left	A		
Thru	A				Thru	A		
Right	A				Right	A		
Peds	X				Peds	X		
WB Left	A				SB Left	A		
Thru	A				Thru	A		
Right	A				Right	A		
Peds	X				Peds	X		
NB Right					EB Right			
SB Right					WB Right			
Green	11.5				36.5			
Yellow	4.0				4.0			
All Red	2.0				2.0			

Cycle Length: 60.0 secs

Intersection Performance Summary

Appr/ Lane Grp	Lane Group Capacity	Adj Sat Flow Rate (s)	Ratios v/c	Ratios g/C	Lane Group Delay	Lane Group LOS	Approach Delay	Approach LOS
Eastbound								
L	264	1375	0.45	0.19	22.6	C		
TR	292	1521	0.50	0.19	23.1	C	22.9	C
Westbound								
LTR	301	1570	0.17	0.19	20.5	C	20.5	C
Northbound								
LTR	1548	2545	0.47	0.61	6.6	A	6.6	A
Southbound								
LTR	1975	3247	0.28	0.61	5.6	A	5.6	A

Intersection Delay = 9.4 (sec/veh) Intersection LOS = A

Sum of flow ratios for critical lane groups, Yc = Sum (v/s) = 0.38
Total lost time per cycle, L = 12.00 sec
Critical flow rate to capacity ratio, Xc = (Yc)(C)/(C-L) = 0.47

HCS2000: Signalized Intersections Release 4.1d

Analyst: J.M. Mark
Agency: Mark Engineering
Date: 11/17/2009
Period: Satuday Inbound Peak Hour
Project ID: Fenelon Falls TIS - D20TSs
E/W St: Veterans Way

Inter.: Lindsay St. & Veterans Way
Area Type: All other areas
Jurisd: City of Kawartha Lakes
Year: 2020 Total Traffic
N/S St: Lindsay Street

SIGNALIZED INTERSECTION SUMMARY

	Eastbound			Westbound			Northbound			Southbound		
	L	T	R	L	T	R	L	T	R	L	T	R
No. Lanes	1	1	0	0	1	0	0	2	0	0	2	0
LGConfig	L	TR			LTR			LTR			LTR	
Volume	102	4	122	25	2	92	188	615	10	6	538	199
Lane Width	3.6	3.6			3.6			3.6			3.6	
RTOR Vol			0			0			0			0

Duration 0.25 Area Type: All other areas

Signal Operations

Phase Combination	1	2	3	4	5	6	7	8
EB Left	A				NB Left	A		
Thru	A				Thru	A		
Right	A				Right	A		
Peds	X				Peds	X		
WB Left	A				SB Left	A		
Thru	A				Thru	A		
Right	A				Right	A		
Peds	X				Peds	X		
NB Right					EB Right			
SB Right					WB Right			
Green	11.7				36.3			
Yellow	4.0				4.0			
All Red	2.0				2.0			

Cycle Length: 60.0 secs

Intersection Performance Summary

Appr/ Lane Grp	Lane Group Capacity	Adj Sat Flow Rate (s)	Ratios v/c	Ratios g/C	Lane Group Delay	Lane Group LOS	Approach Delay	Approach LOS
Eastbound								
L	250	1284	0.45	0.19	22.6	C		
TR	316	1623	0.44	0.19	22.2	C	22.4	C
Westbound								
LTR	282	1447	0.46	0.19	22.6	C	22.6	C
Northbound								
LTR	1356	2241	0.66	0.60	9.0	A	9.0	A
Southbound								
LTR	1941	3208	0.42	0.60	6.4	A	6.4	A

Intersection Delay = 10.4 (sec/veh) Intersection LOS = B

Sum of flow ratios for critical lane groups, Yc = Sum (v/s) = 0.49
Total lost time per cycle, L = 12.00 sec
Critical flow rate to capacity ratio, Xc = (Yc)(C)/(C-L) = 0.61

HCS2000: Signalized Intersections Release 4.1d

Analyst: J.M. Mark
Agency: Mark Engineering
Date: 11/17/2009
Period: Satuday Outbound Peak Hour
Project ID: Fenelon Falls TIS - D20TTs
E/W St: Veterans Way

Inter.: Lindsay St. & Veterans Way
Area Type: All other areas
Jurisd: City of Kawartha Lakes
Year: 2020 Total Traffic
N/S St: Lindsay Street

SIGNALIZED INTERSECTION SUMMARY

	Eastbound			Westbound			Northbound			Southbound		
	L	T	R	L	T	R	L	T	R	L	T	R
No. Lanes	1	1	0	0	1	0	0	2	0	0	2	0
LGConfig	L	TR			LTR			LTR			LTR	
Volume	266	4	249	25	2	92	101	615	10	6	538	86
Lane Width	3.6	3.6			3.6			3.6			3.6	
RTOR Vol			0			0			0			0

Duration 0.25 Area Type: All other areas

Signal Operations

Phase Combination	1	2	3	4	5	6	7	8
EB Left	A				NB Left	A		
Thru	A				Thru	A		
Right	A				Right	A		
Peds	X				Peds	X		
WB Left	A				SB Left	A		
Thru	A				Thru	A		
Right	A				Right	A		
Peds	X				Peds	X		
NB Right					EB Right			
SB Right					WB Right			
Green	18.8				29.2			
Yellow	4.0				4.0			
All Red	2.0				2.0			

Cycle Length: 60.0 secs

Intersection Performance Summary

Appr/ Lane Grp	Lane Group Capacity	Adj Sat Flow Rate (s)	Ratios v/c	Ratios g/C	Lane Group Delay	Lane Group LOS	Approach Delay	Approach LOS
Eastbound								
L	385	1230	0.76	0.31	27.0	C		
TR	507	1619	0.55	0.31	18.3	B	22.8	C
Westbound								
LTR	462	1474	0.28	0.31	15.8	B	15.8	B
Northbound								
LTR	1295	2661	0.62	0.49	12.2	B	12.2	B
Southbound								
LTR	1602	3291	0.43	0.49	10.2	B	10.2	B

Intersection Delay = 14.5 (sec/veh) Intersection LOS = B

Sum of flow ratios for critical lane groups, Yc = Sum (v/s) = 0.54
Total lost time per cycle, L = 12.00 sec
Critical flow rate to capacity ratio, Xc = (Yc)(C)/(C-L) = 0.67

HCS2000: Unsignalized Intersections Release 4.1d

TWO-WAY STOP CONTROL SUMMARY

Analyst: J.M. Mark
Agency/Co.: Mark Engineering
Date Performed: 9/17/2009
Analysis Time Period: Weekday Peak Hour
Intersection: Lindsay St. & West St.
Jurisdiction: City of Kawartha Lakes
Units: U. S. Metric
Analysis Year: 2010 Background Traffic
Project ID: Fenelon Falls TIS - E10BP
East/West Street: West Street
North/South Street: Lindsay Street
Intersection Orientation: NS Study period (hrs): 0.25

Vehicle Volumes and Adjustments

Major Street: Approach	Northbound			Southbound		
Movement	1	2	3	4	5	6
	L	T	R	L	T	R
Volume		377	24	21	289	
Peak-Hour Factor, PHF		0.95	0.95	0.95	0.95	
Hourly Flow Rate, HFR		396	25	22	304	
Percent Heavy Vehicles		--	--	14	--	--
Median Type/Storage	Undivided		/			
RT Channelized?						
Lanes		2	0	0	2	
Configuration		T	TR	LT	T	
Upstream Signal?		No			No	

Minor Street: Approach	Westbound			Eastbound		
Movement	7	8	9	10	11	12
	L	T	R	L	T	R
Volume	12		30			
Peak Hour Factor, PHF	0.95		0.95			
Hourly Flow Rate, HFR	12		31			
Percent Heavy Vehicles	0		10			
Percent Grade (%)		0			0	
Flared Approach: Exists?/Storage			No /			/
Lanes	0		0			
Configuration		LR				

Delay, Queue Length, and Level of Service

Approach	NB	SB	Westbound			Eastbound		
Movement	1	4	7	8	9	10	11	12
Lane Config		LT		LR				
v (vph)		22		43				
C(m) (vph)		1054		629				
v/c		0.02		0.07				
95% queue length		0.06		0.22				
Control Delay		8.5		11.1				
LOS		A		B				
Approach Delay				11.1				
Approach LOS				B				

HCS2000: Unsignalized Intersections Release 4.1d

TWO-WAY STOP CONTROL SUMMARY

Analyst: J.M. Mark
Agency/Co.: Mark Engineering
Date Performed: 9/17/2009
Analysis Time Period: Saturday Peak Hour
Intersection: Lindsay St. & West St.
Jurisdiction: City of Kawartha Lakes
Units: U. S. Metric
Analysis Year: 2010 Background Traffic
Project ID: Fenelon Falls TIS - E10BS
East/West Street: West Street
North/South Street: Lindsay Street
Intersection Orientation: NS Study period (hrs): 0.25

Vehicle Volumes and Adjustments

Major Street: Approach	Northbound			Southbound		
Movement	1	2	3	4	5	6
	L	T	R	L	T	R
Volume		473	19	30	380	
Peak-Hour Factor, PHF		0.96	0.96	0.96	0.96	
Hourly Flow Rate, HFR		492	19	31	395	
Percent Heavy Vehicles		--	--	3	--	--
Median Type/Storage	Undivided		/			
RT Channelized?						
Lanes		2	0	0	2	
Configuration		T	TR	LT	T	
Upstream Signal?		No			No	

Minor Street: Approach	Westbound			Eastbound		
Movement	7	8	9	10	11	12
	L	T	R	L	T	R
Volume	20		30			
Peak Hour Factor, PHF	0.96		0.96			
Hourly Flow Rate, HFR	20		31			
Percent Heavy Vehicles	10		0			
Percent Grade (%)		0			0	
Flared Approach: Exists?/Storage			No /			/
Lanes	0		0			
Configuration		LR				

Delay, Queue Length, and Level of Service

Approach	NB	SB	Westbound			Eastbound		
Movement	1	4	7	8	9	10	11	12
Lane Config		LT		LR				
v (vph)		31		51				
C(m) (vph)		1043		485				
v/c		0.03		0.11				
95% queue length		0.09		0.35				
Control Delay		8.6		13.3				
LOS		A		B				
Approach Delay				13.3				
Approach LOS				B				

HCS2000: Unsignalized Intersections Release 4.1d

TWO-WAY STOP CONTROL SUMMARY

Analyst: J.M .Mark
Agency/Co.: Mark Engineering
Date Performed: 11/17/2009
Analysis Time Period: Weekday Peak Hour
Intersection: Lindsay St. & West St.
Jurisdiction: City of Kawartha Lakes
Units: U. S. Metric
Analysis Year: 2010 Total Traffic
Project ID: Fenelon Falls TIS - E10TP
East/West Street: West Street
North/South Street: Lindsay Street
Intersection Orientation: NS Study period (hrs): 0.25

Vehicle Volumes and Adjustments

Major Street: Approach	Northbound			Southbound		
Movement	1	2	3	4	5	6
	L	T	R	L	T	R
Volume		535	28	44	453	
Peak-Hour Factor, PHF		0.95	0.95	0.95	0.95	
Hourly Flow Rate, HFR		563	29	46	476	
Percent Heavy Vehicles		--	--	14	--	--
Median Type/Storage	Undivided		/			
RT Channelized?						
Lanes		2 0		0	2	
Configuration		T	TR		LT	T
Upstream Signal?		No			No	

Minor Street: Approach	Westbound			Eastbound		
Movement	7	8	9	10	11	12
	L	T	R	L	T	R
Volume	16		48			
Peak Hour Factor, PHF	0.95		0.95			
Hourly Flow Rate, HFR	16		50			
Percent Heavy Vehicles	0		10			
Percent Grade (%)		0			0	
Flared Approach: Exists?/Storage			No /			/
Lanes	0		0			
Configuration		LR				

Delay, Queue Length, and Level of Service

Approach	NB	SB	Westbound			Eastbound		
Movement	1	4	7	8	9	10	11	12
Lane Config		LT		LR				
v (vph)		46		66				
C(m) (vph)		902		492				
v/c		0.05		0.13				
95% queue length		0.16		0.46				
Control Delay		9.2		13.4				
LOS		A		B				
Approach Delay				13.4				
Approach LOS				B				

HCS2000: Unsignalized Intersections Release 4.1d

TWO-WAY STOP CONTROL SUMMARY

Analyst: J.M .Mark
Agency/Co.: Mark Engineering
Date Performed: 11/17/2009
Analysis Time Period: Saturday Inbound Peak Hour
Intersection: Lindsay St. & West St.
Jurisdiction: City of Kawartha Lakes
Units: U. S. Metric
Analysis Year: 2010 Total Traffic
Project ID: Fenelon Falls TIS - E10TS
East/West Street: West Street
North/South Street: Lindsay Street
Intersection Orientation: NS Study period (hrs): 0.25

Vehicle Volumes and Adjustments

Major Street: Approach	Northbound			Southbound		
Movement	1	2	3	4	5	6
	L	T	R	L	T	R
Volume		704	24	41	511	
Peak-Hour Factor, PHF		0.96	0.96	0.96	0.96	
Hourly Flow Rate, HFR		733	25	42	532	
Percent Heavy Vehicles		--	--	3	--	--
Median Type/Storage	Undivided		/			
RT Channelized?						
Lanes		2 0		0	2	
Configuration		T	TR		LT	T
Upstream Signal?		No			No	

Minor Street: Approach	Westbound			Eastbound		
Movement	7	8	9	10	11	12
	L	T	R	L	T	R
Volume	20		30			
Peak Hour Factor, PHF	0.96		0.96			
Hourly Flow Rate, HFR	20		31			
Percent Heavy Vehicles	10		0			
Percent Grade (%)		0			0	
Flared Approach: Exists?/Storage			No /			/
Lanes	0		0			
Configuration		LR				

Delay, Queue Length, and Level of Service

Approach	NB	SB	Westbound			Eastbound		
Movement	1	4	7	8	9	10	11	12
Lane Config		LT		LR				
v (vph)		42		51				
C(m) (vph)		843		323				
v/c		0.05		0.16				
95% queue length		0.16		0.55				
Control Delay		9.5		18.2				
LOS		A		C				
Approach Delay				18.2				
Approach LOS				C				

HCS2000: Unsignalized Intersections Release 4.1d

TWO-WAY STOP CONTROL SUMMARY

Analyst: J.M .Mark
Agency/Co.: Mark Engineering
Date Performed: 11/17/2009
Analysis Time Period: Saturday Outbound Peak Hour
Intersection: Lindsay St. & West St.
Jurisdiction: City of Kawartha Lakes
Units: U. S. Metric
Analysis Year: 2010 Total Traffic
Project ID: Fenelon Falls TIS - E10TT
East/West Street: West Street
North/South Street: Lindsay Street
Intersection Orientation: NS Study period (hrs): 0.25

Vehicle Volumes and Adjustments

Major Street: Approach	Northbound			Southbound		
Movement	1	2	3	4	5	6
	L	T	R	L	T	R
Volume		614	24	63	620	
Peak-Hour Factor, PHF		0.96	0.96	0.96	0.96	
Hourly Flow Rate, HFR		639	25	65	645	
Percent Heavy Vehicles		--	--	3	--	--
Median Type/Storage	Undivided		/			
RT Channelized?						
Lanes		2	0	0	2	
Configuration		T	TR	LT	T	
Upstream Signal?		No			No	

Minor Street: Approach	Westbound			Eastbound		
Movement	7	8	9	10	11	12
	L	T	R	L	T	R
Volume	20		36			
Peak Hour Factor, PHF	0.96		0.96			
Hourly Flow Rate, HFR	20		37			
Percent Heavy Vehicles	10		0			
Percent Grade (%)		0			0	
Flared Approach: Exists?/Storage			No /			/
Lanes	0		0			
Configuration		LR				

Delay, Queue Length, and Level of Service

Approach	NB	SB	Westbound			Eastbound		
Movement	1	4	7	8	9	10	11	12
Lane Config		LT		LR				
v (vph)		65		57				
C(m) (vph)		914		341				
v/c		0.07		0.17				
95% queue length		0.23		0.59				
Control Delay		9.2		17.7				
LOS		A		C				
Approach Delay				17.7				
Approach LOS				C				

HCS2000: Unsignalized Intersections Release 4.1d

TWO-WAY STOP CONTROL SUMMARY

Analyst: J.M. Mark
Agency/Co.: Mark Engineering
Date Performed: 9/17/2009
Analysis Time Period: Weekday Peak Hour
Intersection: Lindsay St. & West St.
Jurisdiction: City of Kawartha Lakes
Units: U. S. Metric
Analysis Year: 2015 Background Traffic
Project ID: Fenelon Falls TIS - E15BP
East/West Street: West Street
North/South Street: Lindsay Street
Intersection Orientation: NS Study period (hrs): 0.25

Vehicle Volumes and Adjustments

Major Street: Approach	Northbound			Southbound		
Movement	1	2	3	4	5	6
	L	T	R	L	T	R
Volume		417	27	24	319	
Peak-Hour Factor, PHF		0.95	0.95	0.95	0.95	
Hourly Flow Rate, HFR		438	28	25	335	
Percent Heavy Vehicles		--	--	14	--	--
Median Type/Storage	Undivided		/			
RT Channelized?						
Lanes		2	0	0	2	
Configuration		T	TR	LT	T	
Upstream Signal?		No			No	

Minor Street: Approach	Westbound			Eastbound		
Movement	7	8	9	10	11	12
	L	T	R	L	T	R
Volume	14		33			
Peak Hour Factor, PHF	0.95		0.95			
Hourly Flow Rate, HFR	14		34			
Percent Heavy Vehicles	0		10			
Percent Grade (%)		0			0	
Flared Approach: Exists?/Storage			No /			/
Lanes	0		0			
Configuration		LR				

Delay, Queue Length, and Level of Service

Approach	NB	SB	Westbound			Eastbound		
Movement	1	4	7	8	9	10	11	12
Lane Config		LT		LR				
v (vph)		25		48				
C(m) (vph)		1012		585				
v/c		0.02		0.08				
95% queue length		0.08		0.27				
Control Delay		8.6		11.7				
LOS		A		B				
Approach Delay				11.7				
Approach LOS				B				

HCS2000: Unsignalized Intersections Release 4.1d

TWO-WAY STOP CONTROL SUMMARY

Analyst: J.M. Mark
Agency/Co.: Mark Engineering
Date Performed: 9/17/2009
Analysis Time Period: Saturday Peak Hour
Intersection: Lindsay St. & West St.
Jurisdiction: City of Kawartha Lakes
Units: U. S. Metric
Analysis Year: 2015 Background Traffic
Project ID: Fenelon Falls TIS - E15BS
East/West Street: West Street
North/South Street: Lindsay Street
Intersection Orientation: NS Study period (hrs): 0.25

Vehicle Volumes and Adjustments

Major Street: Approach	Northbound			Southbound		
Movement	1	2	3	4	5	6
	L	T	R	L	T	R
Volume		523	21	33	420	
Peak-Hour Factor, PHF		0.96	0.96	0.96	0.96	
Hourly Flow Rate, HFR		544	21	34	437	
Percent Heavy Vehicles		--	--	3	--	--
Median Type/Storage	Undivided		/			
RT Channelized?						
Lanes		2	0	0	2	
Configuration		T	TR	LT	T	
Upstream Signal?		No			No	

Minor Street: Approach	Westbound			Eastbound		
Movement	7	8	9	10	11	12
	L	T	R	L	T	R
Volume	23		33			
Peak Hour Factor, PHF	0.96		0.96			
Hourly Flow Rate, HFR	23		34			
Percent Heavy Vehicles	10		0			
Percent Grade (%)		0			0	
Flared Approach: Exists?/Storage			No /			/
Lanes	0		0			
Configuration		LR				

Delay, Queue Length, and Level of Service

Approach	NB	SB	Westbound			Eastbound		
Movement	1	4	7	8	9	10	11	12
Lane Config		LT		LR				
v (vph)		34		57				
C(m) (vph)		996		439				
v/c		0.03		0.13				
95% queue length		0.11		0.44				
Control Delay		8.7		14.4				
LOS		A		B				
Approach Delay				14.4				
Approach LOS				B				

HCS2000: Unsignalized Intersections Release 4.1d

TWO-WAY STOP CONTROL SUMMARY

Analyst: J.M .Mark
Agency/Co.: Mark Engineering
Date Performed: 11/17/2009
Analysis Time Period: Weekday Peak Hour
Intersection: Lindsay St. & West St.
Jurisdiction: City of Kawartha Lakes
Units: U. S. Metric
Analysis Year: 2015 Total Traffic
Project ID: Fenelon Falls TIS - E15TP
East/West Street: West Street
North/South Street: Lindsay Street
Intersection Orientation: NS Study period (hrs): 0.25

Vehicle Volumes and Adjustments

Major Street: Approach	Northbound			Southbound		
Movement	1	2	3	4	5	6
	L	T	R	L	T	R
Volume		575	31	47	483	
Peak-Hour Factor, PHF		0.95	0.95	0.95	0.95	
Hourly Flow Rate, HFR		605	32	49	508	
Percent Heavy Vehicles		--	--	14	--	--
Median Type/Storage	Undivided		/			
RT Channelized?						
Lanes		2 0		0	2	
Configuration		T	TR		LT	T
Upstream Signal?		No			No	

Minor Street: Approach	Westbound			Eastbound		
Movement	7	8	9	10	11	12
	L	T	R	L	T	R
Volume	18		51			
Peak Hour Factor, PHF	0.95		0.95			
Hourly Flow Rate, HFR	18		53			
Percent Heavy Vehicles	0		10			
Percent Grade (%)		0			0	
Flared Approach: Exists?/Storage			No /			/
Lanes	0		0			
Configuration		LR				

Delay, Queue Length, and Level of Service

Approach	NB	SB	Westbound			Eastbound		
Movement	1	4	7	8	9	10	11	12
Lane Config		LT		LR				
v (vph)		49		71				
C(m) (vph)		866		454				
v/c		0.06		0.16				
95% queue length		0.18		0.55				
Control Delay		9.4		14.4				
LOS		A		B				
Approach Delay				14.4				
Approach LOS				B				

HCS2000: Unsignalized Intersections Release 4.1d

TWO-WAY STOP CONTROL SUMMARY

Analyst: J.M .Mark
Agency/Co.: Mark Engineering
Date Performed: 11/17/2009
Analysis Time Period: Saturday Inbound Peak Hour
Intersection: Lindsay St. & West St.
Jurisdiction: City of Kawartha Lakes
Units: U. S. Metric
Analysis Year: 2015 Total Traffic
Project ID: Fenelon Falls TIS - E15TS
East/West Street: West Street
North/South Street: Lindsay Street
Intersection Orientation: NS Study period (hrs): 0.25

Vehicle Volumes and Adjustments

Major Street: Approach	Northbound			Southbound		
Movement	1	2	3	4	5	6
	L	T	R	L	T	R
Volume		754	26	44	551	
Peak-Hour Factor, PHF		0.96	0.96	0.96	0.96	
Hourly Flow Rate, HFR		785	27	45	573	
Percent Heavy Vehicles		--	--	3	--	--
Median Type/Storage	Undivided		/			
RT Channelized?						
Lanes		2 0		0	2	
Configuration		T	TR		LT	T
Upstream Signal?		No			No	

Minor Street: Approach	Westbound			Eastbound		
Movement	7	8	9	10	11	12
	L	T	R	L	T	R
Volume	23		33			
Peak Hour Factor, PHF	0.96		0.96			
Hourly Flow Rate, HFR	23		34			
Percent Heavy Vehicles	10		0			
Percent Grade (%)		0			0	
Flared Approach: Exists?/Storage			No /			/
Lanes	0		0			
Configuration		LR				

Delay, Queue Length, and Level of Service

Approach	NB	SB	Westbound			Eastbound		
Movement	1	4	7	8	9	10	11	12
Lane Config		LT		LR				
v (vph)		45		57				
C(m) (vph)		804		288				
v/c		0.06		0.20				
95% queue length		0.18		0.72				
Control Delay		9.7		20.6				
LOS		A		C				
Approach Delay				20.6				
Approach LOS				C				

HCS2000: Unsignalized Intersections Release 4.1d

TWO-WAY STOP CONTROL SUMMARY

Analyst: J.M .Mark
Agency/Co.: Mark Engineering
Date Performed: 11/17/2009
Analysis Time Period: Saturday Outbound Peak Hour
Intersection: Lindsay St. & West St.
Jurisdiction: City of Kawartha Lakes
Units: U. S. Metric
Analysis Year: 2015 Total Traffic
Project ID: Fenelon Falls TIS - E15TT
East/West Street: West Street
North/South Street: Lindsay Street
Intersection Orientation: NS Study period (hrs): 0.25

Vehicle Volumes and Adjustments

Major Street: Approach	Northbound			Southbound		
Movement	1	2	3	4	5	6
	L	T	R	L	T	R
Volume		664	26	66	660	
Peak-Hour Factor, PHF		0.96	0.96	0.96	0.96	
Hourly Flow Rate, HFR		691	27	68	687	
Percent Heavy Vehicles		--	--	3	--	--
Median Type/Storage	Undivided		/			
RT Channelized?						
Lanes		2 0		0	2	
Configuration		T	TR		LT	T
Upstream Signal?		No			No	

Minor Street: Approach	Westbound			Eastbound		
Movement	7	8	9	10	11	12
	L	T	R	L	T	R
Volume	23		39			
Peak Hour Factor, PHF	0.96		0.96			
Hourly Flow Rate, HFR	23		40			
Percent Heavy Vehicles	10		0			
Percent Grade (%)		0			0	
Flared Approach: Exists?/Storage			No /			/
Lanes	0		0			
Configuration		LR				

Delay, Queue Length, and Level of Service

Approach	NB	SB	Westbound			Eastbound		
Movement	1	4	7	8	9	10	11	12
Lane Config		LT		LR				
v (vph)		68		63				
C(m) (vph)		872		303				
v/c		0.08		0.21				
95% queue length		0.25		0.77				
Control Delay		9.5		20.0				
LOS		A		C				
Approach Delay				20.0				
Approach LOS				C				

HCS2000: Unsignalized Intersections Release 4.1d

TWO-WAY STOP CONTROL SUMMARY

Analyst: J.M. Mark
Agency/Co.: Mark Engineering
Date Performed: 9/17/2009
Analysis Time Period: Weekday Peak Hour
Intersection: Lindsay St. & West St.
Jurisdiction: City of Kawartha Lakes
Units: U. S. Metric
Analysis Year: 2020 Background Traffic
Project ID: Fenelon Falls TIS - E20BP
East/West Street: West Street
North/South Street: Lindsay Street
Intersection Orientation: NS Study period (hrs): 0.25

Vehicle Volumes and Adjustments

Major Street: Approach	Northbound			Southbound		
Movement	1	2	3	4	5	6
	L	T	R	L	T	R
Volume		460	30	26	352	
Peak-Hour Factor, PHF		0.95	0.95	0.95	0.95	
Hourly Flow Rate, HFR		484	31	27	370	
Percent Heavy Vehicles		--	--	14	--	--
Median Type/Storage	Undivided		/			
RT Channelized?						
Lanes		2	0	0	2	
Configuration		T	TR	LT	T	
Upstream Signal?		No			No	

Minor Street: Approach	Westbound			Eastbound		
Movement	7	8	9	10	11	12
	L	T	R	L	T	R
Volume	15		36			
Peak Hour Factor, PHF	0.95		0.95			
Hourly Flow Rate, HFR	15		37			
Percent Heavy Vehicles	0		10			
Percent Grade (%)		0			0	
Flared Approach: Exists?/Storage			No /			/
Lanes	0		0			
Configuration		LR				

Delay, Queue Length, and Level of Service

Approach	NB	SB	Westbound			Eastbound		
Movement	1	4	7	8	9	10	11	12
Lane Config		LT		LR				
v (vph)		27		52				
C(m) (vph)		967		548				
v/c		0.03		0.09				
95% queue length		0.09		0.31				
Control Delay		8.8		12.3				
LOS		A		B				
Approach Delay				12.3				
Approach LOS				B				

HCS2000: Unsignalized Intersections Release 4.1d

TWO-WAY STOP CONTROL SUMMARY

Analyst: J.M. Mark
Agency/Co.: Mark Engineering
Date Performed: 9/17/2009
Analysis Time Period: Saturday Peak Hour
Intersection: Lindsay St. & West St.
Jurisdiction: City of Kawartha Lakes
Units: U. S. Metric
Analysis Year: 2020 Background Traffic
Project ID: Fenelon Falls TIS - E20BS
East/West Street: West Street
North/South Street: Lindsay Street
Intersection Orientation: NS Study period (hrs): 0.25

Vehicle Volumes and Adjustments

Major Street: Approach	Northbound			Southbound		
Movement	1	2	3	4	5	6
	L	T	R	L	T	R
Volume		577	24	36	464	
Peak-Hour Factor, PHF		0.96	0.96	0.96	0.96	
Hourly Flow Rate, HFR		601	25	37	483	
Percent Heavy Vehicles		--	--	3	--	--
Median Type/Storage	Undivided		/			
RT Channelized?						
Lanes		2	0	0	2	
Configuration		T	TR	LT	T	
Upstream Signal?		No			No	

Minor Street: Approach	Westbound			Eastbound		
Movement	7	8	9	10	11	12
	L	T	R	L	T	R
Volume	25		36			
Peak Hour Factor, PHF	0.96		0.96			
Hourly Flow Rate, HFR	26		37			
Percent Heavy Vehicles	10		0			
Percent Grade (%)		0			0	
Flared Approach: Exists?/Storage			No /			/
Lanes	0		0			
Configuration		LR				

Delay, Queue Length, and Level of Service

Approach	NB	SB	Westbound			Eastbound		
Movement	1	4	7	8	9	10	11	12
Lane Config		LT		LR				
v (vph)		37		63				
C(m) (vph)		945		390				
v/c		0.04		0.16				
95% queue length		0.12		0.57				
Control Delay		9.0		16.0				
LOS		A		C				
Approach Delay				16.0				
Approach LOS				C				

HCS2000: Unsignalized Intersections Release 4.1d

TWO-WAY STOP CONTROL SUMMARY

Analyst: J.M .Mark
Agency/Co.: Mark Engineering
Date Performed: 11/17/2009
Analysis Time Period: Weekday Peak Hour
Intersection: Lindsay St. & West St.
Jurisdiction: City of Kawartha Lakes
Units: U. S. Metric
Analysis Year: 2020 Total Traffic
Project ID: Fenelon Falls TIS - E20TP
East/West Street: West Street
North/South Street: Lindsay Street
Intersection Orientation: NS Study period (hrs): 0.25

Vehicle Volumes and Adjustments

Major Street: Approach	Northbound			Southbound		
Movement	1	2	3	4	5	6
	L	T	R	L	T	R
Volume		618	34	49	516	
Peak-Hour Factor, PHF		0.95	0.95	0.95	0.95	
Hourly Flow Rate, HFR		650	35	51	543	
Percent Heavy Vehicles		--	--	14	--	--
Median Type/Storage	Undivided		/			
RT Channelized?						
Lanes		2 0		0	2	
Configuration		T	TR		LT	T
Upstream Signal?		No			No	

Minor Street: Approach	Westbound			Eastbound		
Movement	7	8	9	10	11	12
	L	T	R	L	T	R
Volume	19		54			
Peak Hour Factor, PHF	0.95		0.95			
Hourly Flow Rate, HFR	20		56			
Percent Heavy Vehicles	0		10			
Percent Grade (%)		0			0	
Flared Approach: Exists?/Storage			No /			/
Lanes	0		0			
Configuration		LR				

Delay, Queue Length, and Level of Service

Approach	NB	SB	Westbound			Eastbound		
Movement	1	4	7	8	9	10	11	12
Lane Config		LT		LR				
v (vph)		51		76				
C(m) (vph)		828		418				
v/c		0.06		0.18				
95% queue length		0.20		0.66				
Control Delay		9.6		15.5				
LOS		A		C				
Approach Delay				15.5				
Approach LOS				C				

HCS2000: Unsignalized Intersections Release 4.1d

TWO-WAY STOP CONTROL SUMMARY

Analyst: J.M .Mark
Agency/Co.: Mark Engineering
Date Performed: 11/17/2009
Analysis Time Period: Saturday Inbound Peak Hour
Intersection: Lindsay St. & West St.
Jurisdiction: City of Kawartha Lakes
Units: U. S. Metric
Analysis Year: 2020 Total Traffic
Project ID: Fenelon Falls TIS - E20TS
East/West Street: West Street
North/South Street: Lindsay Street
Intersection Orientation: NS Study period (hrs): 0.25

Vehicle Volumes and Adjustments

Major Street: Approach	Northbound			Southbound		
Movement	1	2	3	4	5	6
	L	T	R	L	T	R
Volume		808	29	47	595	
Peak-Hour Factor, PHF		0.96	0.96	0.96	0.96	
Hourly Flow Rate, HFR		841	30	48	619	
Percent Heavy Vehicles		--	--	3	--	--
Median Type/Storage	Undivided		/			
RT Channelized?						
Lanes		2	0	0	2	
Configuration		T	TR	LT	T	
Upstream Signal?		No			No	

Minor Street: Approach	Westbound			Eastbound		
Movement	7	8	9	10	11	12
	L	T	R	L	T	R
Volume	25		36			
Peak Hour Factor, PHF	0.96		0.96			
Hourly Flow Rate, HFR	26		37			
Percent Heavy Vehicles	10		0			
Percent Grade (%)		0			0	
Flared Approach: Exists?/Storage			No /			/
Lanes	0		0			
Configuration		LR				

Delay, Queue Length, and Level of Service

Approach	NB	SB	Westbound			Eastbound		
Movement	1	4	7	8	9	10	11	12
Lane Config		LT		LR				
v (vph)		48		63				
C(m) (vph)		763		254				
v/c		0.06		0.25				
95% queue length		0.20		0.95				
Control Delay		10.0+		23.8				
LOS		B		C				
Approach Delay				23.8				
Approach LOS				C				

HCS2000: Unsignalized Intersections Release 4.1d

TWO-WAY STOP CONTROL SUMMARY

Analyst: J.M .Mark
Agency/Co.: Mark Engineering
Date Performed: 11/17/2009
Analysis Time Period: Saturday Outbound Peak Hour
Intersection: Lindsay St. & West St.
Jurisdiction: City of Kawartha Lakes
Units: U. S. Metric
Analysis Year: 2020 Total Traffic
Project ID: Fenelon Falls TIS - E20TT
East/West Street: West Street
North/South Street: Lindsay Street
Intersection Orientation: NS Study period (hrs): 0.25

Vehicle Volumes and Adjustments

Major Street: Approach	Northbound			Southbound		
Movement	1	2	3	4	5	6
	L	T	R	L	T	R
Volume		718	29	69	704	
Peak-Hour Factor, PHF		0.96	0.96	0.96	0.96	
Hourly Flow Rate, HFR		747	30	71	733	
Percent Heavy Vehicles		--	--	3	--	--
Median Type/Storage	Undivided		/			
RT Channelized?						
Lanes		2	0	0	2	
Configuration		T	TR	LT	T	
Upstream Signal?		No			No	

Minor Street: Approach	Westbound			Eastbound		
Movement	7	8	9	10	11	12
	L	T	R	L	T	R
Volume	25		39			
Peak Hour Factor, PHF	0.96		0.96			
Hourly Flow Rate, HFR	26		40			
Percent Heavy Vehicles	10		0			
Percent Grade (%)		0			0	
Flared Approach: Exists?/Storage			No /			/
Lanes	0		0			
Configuration		LR				

Delay, Queue Length, and Level of Service

Approach	NB	SB	Westbound			Eastbound		
Movement	1	4	7	8	9	10	11	12
Lane Config		LT		LR				
v (vph)		71		66				
C(m) (vph)		829		258				
v/c		0.09		0.26				
95% queue length		0.28		0.99				
Control Delay		9.7		23.7				
LOS		A		C				
Approach Delay				23.7				
Approach LOS				C				

HCS2000: Unsignalized Intersections Release 4.1d

TWO-WAY STOP CONTROL SUMMARY

Analyst: J.M. Mark
Agency/Co.: Mark Engineering
Date Performed: 9/17/2009
Analysis Time Period: Weekday Peak Hour
Intersection: Helen St. & Oriole Rd.
Jurisdiction: City of Kawartha Lakes
Units: U. S. Metric
Analysis Year: 2010 Background Traffic
Project ID: Fenelon Falls TIS - F10BP
East/West Street: Helen Street
North/South Street: Oriole Road
Intersection Orientation: EW Study period (hrs): 0.25

Vehicle Volumes and Adjustments

Major Street: Approach	Eastbound			Westbound		
Movement	1	2	3	4	5	6
	L	T	R	L	T	R
Volume	0	221			255	3
Peak-Hour Factor, PHF	0.93	0.93			0.93	0.93
Hourly Flow Rate, HFR	0	237			274	3
Percent Heavy Vehicles	0	--	--		--	--
Median Type/Storage	Undivided		/			
RT Channelized?						
Lanes	0	1			1	0
Configuration	LT					TR
Upstream Signal?		No			No	

Minor Street: Approach	Northbound			Southbound		
Movement	7	8	9	10	11	12
	L	T	R	L	T	R
Volume				1		10
Peak Hour Factor, PHF				0.93		0.93
Hourly Flow Rate, HFR				1		10
Percent Heavy Vehicles				0		90
Percent Grade (%)		0			0	
Flared Approach: Exists?/Storage			/			No /
Lanes				0		0
Configuration					LR	

Delay, Queue Length, and Level of Service

Approach	EB	WB	Northbound			Southbound		
Movement	1	4	7	8	9	10	11	12
Lane Config	LT						LR	
v (vph)	0						11	
C(m) (vph)	1298						585	
v/c	0.00						0.02	
95% queue length	0.00						0.06	
Control Delay	7.8						11.3	
LOS	A						B	
Approach Delay							11.3	
Approach LOS							B	

HCS2000: Unsignalized Intersections Release 4.1d

TWO-WAY STOP CONTROL SUMMARY

Analyst: J.M. Mark
Agency/Co.: Mark Engineering
Date Performed: 9/17/2009
Analysis Time Period: Saturday Peak Hour
Intersection: Helen St. & Oriole Rd.
Jurisdiction: City of Kawartha Lakes
Units: U. S. Metric
Analysis Year: 2010 Background Traffic
Project ID: Fenelon Falls TIS - F10BS
East/West Street: Helen Street
North/South Street: Oriole Road
Intersection Orientation: EW Study period (hrs): 0.25

Vehicle Volumes and Adjustments

Major Street: Approach	Eastbound			Westbound		
Movement	1	2	3	4	5	6
	L	T	R	L	T	R
Volume	5	314			358	5
Peak-Hour Factor, PHF	0.89	0.89			0.89	0.89
Hourly Flow Rate, HFR	5	352			402	5
Percent Heavy Vehicles	0	--	--		--	--
Median Type/Storage	Undivided /					
RT Channelized?						
Lanes	0	1			1	0
Configuration	LT					TR
Upstream Signal?		No			No	

Minor Street: Approach	Northbound			Southbound		
Movement	7	8	9	10	11	12
	L	T	R	L	T	R
Volume				6		4
Peak Hour Factor, PHF				0.89		0.89
Hourly Flow Rate, HFR				6		4
Percent Heavy Vehicles				0		90
Percent Grade (%)		0			0	
Flared Approach: Exists?/Storage			/			No /
Lanes				0		0
Configuration					LR	

Delay, Queue Length, and Level of Service

Approach	EB	WB	Northbound			Southbound		
Movement	1	4	7	8	9	10	11	12
Lane Config	LT						LR	
v (vph)	5						10	
C(m) (vph)	1126						395	
v/c	0.00						0.03	
95% queue length	0.01						0.08	
Control Delay	8.2						14.4	
LOS	A						B	
Approach Delay							14.4	
Approach LOS							B	

HCS2000: Unsignalized Intersections Release 4.1d

TWO-WAY STOP CONTROL SUMMARY

Analyst: J.M. Mark
Agency/Co.: Mark Engineering
Date Performed: 11/17/2009
Analysis Time Period: Weekday Peak Hour
Intersection: Helen St. & Oriole Rd.
Jurisdiction: City of Kawartha Lakes
Units: U. S. Metric
Analysis Year: 2010 Total Traffic
Project ID: Fenelon Falls TIS - F10TP
East/West Street: Helen Street
North/South Street: Oriole Road
Intersection Orientation: EW Study period (hrs): 0.25

Vehicle Volumes and Adjustments

Major Street: Approach	Eastbound			Westbound		
Movement	1	2	3	4	5	6
	L	T	R	L	T	R
Volume	0	283			362	3
Peak-Hour Factor, PHF	0.93	0.93			0.93	0.93
Hourly Flow Rate, HFR	0	304			389	3
Percent Heavy Vehicles	0	--	--		--	--
Median Type/Storage	Undivided /					
RT Channelized?						
Lanes	0	1			1	0
Configuration	LT					TR
Upstream Signal?		No			No	

Minor Street: Approach	Northbound			Southbound		
Movement	7	8	9	10	11	12
	L	T	R	L	T	R
Volume				1		10
Peak Hour Factor, PHF				0.93		0.93
Hourly Flow Rate, HFR				1		10
Percent Heavy Vehicles				0		90
Percent Grade (%)		0			0	
Flared Approach: Exists?/Storage			/			No /
Lanes				0		0
Configuration					LR	

Delay, Queue Length, and Level of Service

Approach	EB	WB	Northbound			Southbound		
Movement	1	4	7	8	9	10	11	12
Lane Config	LT						LR	
v (vph)	0						11	
C(m) (vph)	1178						493	
v/c	0.00						0.02	
95% queue length	0.00						0.07	
Control Delay	8.1						12.5	
LOS	A						B	
Approach Delay							12.5	
Approach LOS							B	

HCS2000: Unsignalized Intersections Release 4.1d

TWO-WAY STOP CONTROL SUMMARY

Analyst:	J.M. Mark
Agency/Co.:	Mark Engineering
Date Performed:	11/17/2009
Analysis Time Period:	Saturday Inbound Peak Hour
Intersection:	Helen St. & Oriole Rd.
Jurisdiction:	City of Kawartha Lakes
Units:	U. S. Metric
Analysis Year:	2010 Total Traffic
Project ID:	Fenelon Falls TIS - F10TS
East/West Street:	Helen Street
North/South Street:	Oriole Road
Intersection Orientation:	EW
Study period (hrs):	0.25

Vehicle Volumes and Adjustments

Major Street: Approach	Eastbound			Westbound		
Movement	1	2	3	4	5	6
	L	T	R	L	T	R
Volume	5	444			422	5
Peak-Hour Factor, PHF	0.89	0.89			0.89	0.89
Hourly Flow Rate, HFR	5	498			474	5
Percent Heavy Vehicles	0	--	--		--	--
Median Type/Storage	Undivided /					
RT Channelized?						
Lanes	0	1			1	0
Configuration		LT				TR
Upstream Signal?		No			No	

Minor Street: Approach	Northbound			Southbound		
Movement	7	8	9	10	11	12
	L	T	R	L	T	R
Volume				6		4
Peak Hour Factor, PHF				0.89		0.89
Hourly Flow Rate, HFR				6		4
Percent Heavy Vehicles				0		90
Percent Grade (%)		0			0	
Flared Approach: Exists?/Storage				/		No /
Lanes				0		0
Configuration					LR	

Delay, Queue Length, and Level of Service

Approach	EB	WB	Northbound			Southbound		
Movement	1	4	7	8	9	10	11	12
Lane Config	LT						LR	
v (vph)	5						10	
C(m) (vph)	1059						311	
v/c	0.00						0.03	
95% queue length	0.01						0.10	
Control Delay	8.4						17.0	
LOS	A						C	
Approach Delay							17.0	
Approach LOS							C	

HCS2000: Unsignalized Intersections Release 4.1d

TWO-WAY STOP CONTROL SUMMARY

Analyst: J.M. Mark
Agency/Co.: Mark Engineering
Date Performed: 11/17/2009
Analysis Time Period: Saturday Outbound Peak Hour
Intersection: Helen St. & Oriole Rd.
Jurisdiction: City of Kawartha Lakes
Units: U. S. Metric
Analysis Year: 2010 Total Traffic
Project ID: Fenelon Falls TIS - F10TT
East/West Street: Helen Street
North/South Street: Oriole Road
Intersection Orientation: EW Study period (hrs): 0.25

Vehicle Volumes and Adjustments

Major Street: Approach	Eastbound			Westbound		
Movement	1	2	3	4	5	6
	L	T	R	L	T	R
Volume	5	381			509	5
Peak-Hour Factor, PHF	0.89	0.89			0.89	0.89
Hourly Flow Rate, HFR	5	428			571	5
Percent Heavy Vehicles	0	--	--		--	--
Median Type/Storage	Undivided /					
RT Channelized?						
Lanes	0	1			1	0
Configuration	LT					TR
Upstream Signal?		No			No	

Minor Street: Approach	Northbound			Southbound		
Movement	7	8	9	10	11	12
	L	T	R	L	T	R
Volume				6		4
Peak Hour Factor, PHF				0.89		0.89
Hourly Flow Rate, HFR				6		4
Percent Heavy Vehicles				0		90
Percent Grade (%)		0			0	
Flared Approach: Exists?/Storage				/		No /
Lanes				0		0
Configuration					LR	

Delay, Queue Length, and Level of Service

Approach	EB	WB	Northbound			Southbound		
Movement	1	4	7	8	9	10	11	12
Lane Config	LT						LR	
v (vph)	5						10	
C(m) (vph)	975						292	
v/c	0.01						0.03	
95% queue length	0.02						0.11	
Control Delay	8.7						17.8	
LOS	A						C	
Approach Delay							17.8	
Approach LOS							C	

HCS2000: Unsignalized Intersections Release 4.1d

TWO-WAY STOP CONTROL SUMMARY

Analyst: J.M. Mark
Agency/Co.: Mark Engineering
Date Performed: 9/17/2009
Analysis Time Period: Weekday Peak Hour
Intersection: Helen St. & Oriole Rd.
Jurisdiction: City of Kawartha Lakes
Units: U. S. Metric
Analysis Year: 2015 Background Traffic
Project ID: Fenelon Falls TIS - F15BP
East/West Street: Helen Street
North/South Street: Oriole Road
Intersection Orientation: EW Study period (hrs): 0.25

Vehicle Volumes and Adjustments

Major Street: Approach	Eastbound			Westbound		
Movement	1	2	3	4	5	6
	L	T	R	L	T	R
Volume	0	244			282	3
Peak-Hour Factor, PHF	0.93	0.93			0.93	0.93
Hourly Flow Rate, HFR	0	262			303	3
Percent Heavy Vehicles	0	--	--		--	--
Median Type/Storage	Undivided /					
RT Channelized?						
Lanes	0	1			1	0
Configuration	LT					TR
Upstream Signal?		No			No	

Minor Street: Approach	Northbound			Southbound		
Movement	7	8	9	10	11	12
	L	T	R	L	T	R
Volume				1		11
Peak Hour Factor, PHF				0.93		0.93
Hourly Flow Rate, HFR				1		11
Percent Heavy Vehicles				0		90
Percent Grade (%)		0			0	
Flared Approach: Exists?/Storage				/		No /
Lanes				0		0
Configuration					LR	

Delay, Queue Length, and Level of Service

Approach	EB	WB	Northbound			Southbound		
Movement	1	4	7	8	9	10	11	12
Lane Config	LT						LR	
v (vph)	0						12	
C(m) (vph)	1266						561	
v/c	0.00						0.02	
95% queue length	0.00						0.07	
Control Delay	7.8						11.6	
LOS	A						B	
Approach Delay							11.6	
Approach LOS							B	

HCS2000: Unsignalized Intersections Release 4.1d

TWO-WAY STOP CONTROL SUMMARY

Analyst: J.M. Mark
Agency/Co.: Mark Engineering
Date Performed: 9/17/2009
Analysis Time Period: Saturday Peak Hour
Intersection: Helen St. & Oriole Rd.
Jurisdiction: City of Kawartha Lakes
Units: U. S. Metric
Analysis Year: 2015 Background Traffic
Project ID: Fenelon Falls TIS - F15BS
East/West Street: Helen Street
North/South Street: Oriole Road
Intersection Orientation: EW Study period (hrs): 0.25

Vehicle Volumes and Adjustments

Major Street: Approach	Eastbound			Westbound		
Movement	1	2	3	4	5	6
	L	T	R	L	T	R
Volume	6	347			395	6
Peak-Hour Factor, PHF	0.89	0.89			0.89	0.89
Hourly Flow Rate, HFR	6	389			443	6
Percent Heavy Vehicles	0	--	--		--	--
Median Type/Storage	Undivided /					
RT Channelized?						
Lanes	0	1			1	0
Configuration	LT					TR
Upstream Signal?		No			No	

Minor Street: Approach	Northbound			Southbound		
Movement	7	8	9	10	11	12
	L	T	R	L	T	R
Volume				7		5
Peak Hour Factor, PHF				0.89		0.89
Hourly Flow Rate, HFR				7		5
Percent Heavy Vehicles				0		90
Percent Grade (%)		0			0	
Flared Approach: Exists?/Storage				/		No /
Lanes				0		0
Configuration					LR	

Delay, Queue Length, and Level of Service

Approach	EB	WB	Northbound			Southbound		
Movement	1	4	7	8	9	10	11	12
Lane Config	LT						LR	
v (vph)	6						12	
C(m) (vph)	1087						361	
v/c	0.01						0.03	
95% queue length	0.02						0.10	
Control Delay	8.3						15.3	
LOS	A						C	
Approach Delay							15.3	
Approach LOS							C	

HCS2000: Unsignalized Intersections Release 4.1d

TWO-WAY STOP CONTROL SUMMARY

Analyst: J.M. Mark
Agency/Co.: Mark Engineering
Date Performed: 11/17/2009
Analysis Time Period: Weekday Peak Hour
Intersection: Helen St. & Oriole Rd.
Jurisdiction: City of Kawartha Lakes
Units: U. S. Metric
Analysis Year: 2015 Total Traffic
Project ID: Fenelon Falls TIS - F15TP
East/West Street: Helen Street
North/South Street: Oriole Road
Intersection Orientation: EW Study period (hrs): 0.25

Vehicle Volumes and Adjustments

Major Street: Approach	Eastbound			Westbound		
Movement	1	2	3	4	5	6
	L	T	R	L	T	R
Volume	0	306			389	3
Peak-Hour Factor, PHF	0.93	0.93			0.93	0.93
Hourly Flow Rate, HFR	0	329			418	3
Percent Heavy Vehicles	0	--	--		--	--
Median Type/Storage	Undivided /					
RT Channelized?						
Lanes	0	1			1	0
Configuration	LT					TR
Upstream Signal?		No			No	

Minor Street: Approach	Northbound			Southbound		
Movement	7	8	9	10	11	12
	L	T	R	L	T	R
Volume				1		11
Peak Hour Factor, PHF				0.93		0.93
Hourly Flow Rate, HFR				1		11
Percent Heavy Vehicles				0		90
Percent Grade (%)		0			0	
Flared Approach: Exists?/Storage			/			No /
Lanes				0		0
Configuration					LR	

Delay, Queue Length, and Level of Service

Approach	EB	WB	Northbound			Southbound		
Movement	1	4	7	8	9	10	11	12
Lane Config	LT						LR	
v (vph)	0						12	
C(m) (vph)	1149						472	
v/c	0.00						0.03	
95% queue length	0.00						0.08	
Control Delay	8.1						12.8	
LOS	A						B	
Approach Delay							12.8	
Approach LOS							B	

HCS2000: Unsignalized Intersections Release 4.1d

TWO-WAY STOP CONTROL SUMMARY

Analyst: J.M. Mark
Agency/Co.: Mark Engineering
Date Performed: 11/17/2009
Analysis Time Period: Saturday Inbound Peak Hour
Intersection: Helen St. & Oriole Rd.
Jurisdiction: City of Kawartha Lakes
Units: U. S. Metric
Analysis Year: 2015 Total Traffic
Project ID: Fenelon Falls TIS - F15TS
East/West Street: Helen Street
North/South Street: Oriole Road
Intersection Orientation: EW Study period (hrs): 0.25

Vehicle Volumes and Adjustments

Major Street: Approach	Eastbound			Westbound		
Movement	1	2	3	4	5	6
	L	T	R	L	T	R
Volume	6	477			459	6
Peak-Hour Factor, PHF	0.89	0.89			0.89	0.89
Hourly Flow Rate, HFR	6	535			515	6
Percent Heavy Vehicles	0	--	--		--	--
Median Type/Storage	Undivided /					
RT Channelized?						
Lanes	0	1			1	0
Configuration		LT				TR
Upstream Signal?		No			No	

Minor Street: Approach	Northbound			Southbound		
Movement	7	8	9	10	11	12
	L	T	R	L	T	R
Volume				7		5
Peak Hour Factor, PHF				0.89		0.89
Hourly Flow Rate, HFR				7		5
Percent Heavy Vehicles				0		90
Percent Grade (%)		0			0	
Flared Approach: Exists?/Storage				/		No /
Lanes				0		0
Configuration					LR	

Delay, Queue Length, and Level of Service

Approach	EB	WB	Northbound			Southbound		
Movement	1	4	7	8	9	10	11	12
Lane Config	LT						LR	
v (vph)	6						12	
C(m) (vph)	1019						284	
v/c	0.01						0.04	
95% queue length	0.02						0.13	
Control Delay	8.6						18.2	
LOS	A						C	
Approach Delay							18.2	
Approach LOS							C	

HCS2000: Unsignalized Intersections Release 4.1d

TWO-WAY STOP CONTROL SUMMARY

Analyst: J.M. Mark
Agency/Co.: Mark Engineering
Date Performed: 11/17/2009
Analysis Time Period: Saturday Outbound Peak Hour
Intersection: Helen St. & Oriole Rd.
Jurisdiction: City of Kawartha Lakes
Units: U. S. Metric
Analysis Year: 2015 Total Traffic
Project ID: Fenelon Falls TIS - F15TT
East/West Street: Helen Street
North/South Street: Oriole Road
Intersection Orientation: EW Study period (hrs): 0.25

Vehicle Volumes and Adjustments

Major Street: Approach	Eastbound			Westbound		
Movement	1	2	3	4	5	6
	L	T	R	L	T	R
Volume	6	414			546	6
Peak-Hour Factor, PHF	0.89	0.89			0.89	0.89
Hourly Flow Rate, HFR	6	465			613	6
Percent Heavy Vehicles	0	--	--		--	--
Median Type/Storage	Undivided /					
RT Channelized?						
Lanes	0	1			1	0
Configuration		LT				TR
Upstream Signal?		No			No	

Minor Street: Approach	Northbound			Southbound		
Movement	7	8	9	10	11	12
	L	T	R	L	T	R
Volume				7		5
Peak Hour Factor, PHF				0.89		0.89
Hourly Flow Rate, HFR				7		5
Percent Heavy Vehicles				0		90
Percent Grade (%)		0			0	
Flared Approach: Exists?/Storage				/		No /
Lanes				0		0
Configuration					LR	

Delay, Queue Length, and Level of Service

Approach	EB	WB	Northbound			Southbound		
Movement	1	4	7	8	9	10	11	12
Lane Config	LT						LR	
v (vph)	6						12	
C(m) (vph)	937						264	
v/c	0.01						0.05	
95% queue length	0.02						0.14	
Control Delay	8.9						19.3	
LOS	A						C	
Approach Delay							19.3	
Approach LOS							C	

HCS2000: Unsignalized Intersections Release 4.1d

TWO-WAY STOP CONTROL SUMMARY

Analyst: J.M. Mark
Agency/Co.: Mark Engineering
Date Performed: 9/17/2009
Analysis Time Period: Weekday Peak Hour
Intersection: Helen St. & Oriole Rd.
Jurisdiction: City of Kawartha Lakes
Units: U. S. Metric
Analysis Year: 2020 Background Traffic
Project ID: Fenelon Falls TIS - F20BP
East/West Street: Helen Street
North/South Street: Oriole Road
Intersection Orientation: EW Study period (hrs): 0.25

Vehicle Volumes and Adjustments

Major Street: Approach	Eastbound			Westbound		
Movement	1	2	3	4	5	6
	L	T	R	L	T	R
Volume	0	270			311	4
Peak-Hour Factor, PHF	0.93	0.93			0.93	0.93
Hourly Flow Rate, HFR	0	290			334	4
Percent Heavy Vehicles	0	--	--		--	--
Median Type/Storage	Undivided		/			
RT Channelized?						
Lanes	0	1			1	0
Configuration		LT				TR
Upstream Signal?		No			No	

Minor Street: Approach	Northbound			Southbound		
Movement	7	8	9	10	11	12
	L	T	R	L	T	R
Volume				1		12
Peak Hour Factor, PHF				0.93		0.93
Hourly Flow Rate, HFR				1		12
Percent Heavy Vehicles				0		90
Percent Grade (%)		0			0	
Flared Approach: Exists?/Storage			/			No /
Lanes				0		0
Configuration					LR	

Delay, Queue Length, and Level of Service

Approach	EB	WB	Northbound			Southbound		
Movement	1	4	7	8	9	10	11	12
Lane Config	LT						LR	
v (vph)	0						13	
C(m) (vph)	1232						536	
v/c	0.00						0.02	
95% queue length	0.00						0.07	
Control Delay	7.9						11.9	
LOS	A						B	
Approach Delay							11.9	
Approach LOS							B	

HCS2000: Unsignalized Intersections Release 4.1d

TWO-WAY STOP CONTROL SUMMARY

Analyst: J.M. Mark
Agency/Co.: Mark Engineering
Date Performed: 9/17/2009
Analysis Time Period: Saturday Peak Hour
Intersection: Helen St. & Oriole Rd.
Jurisdiction: City of Kawartha Lakes
Units: U. S. Metric
Analysis Year: 2020 Background Traffic
Project ID: Fenelon Falls TIS - F20BS
East/West Street: Helen Street
North/South Street: Oriole Road
Intersection Orientation: EW Study period (hrs): 0.25

Vehicle Volumes and Adjustments

Major Street: Approach	Eastbound			Westbound		
Movement	1	2	3	4	5	6
	L	T	R	L	T	R
Volume	6	383			436	6
Peak-Hour Factor, PHF	0.89	0.89			0.89	0.89
Hourly Flow Rate, HFR	6	430			489	6
Percent Heavy Vehicles	0	--	--		--	--
Median Type/Storage	Undivided /					
RT Channelized?						
Lanes	0	1			1	0
Configuration	LT					TR
Upstream Signal?		No			No	

Minor Street: Approach	Northbound			Southbound		
Movement	7	8	9	10	11	12
	L	T	R	L	T	R
Volume				7		5
Peak Hour Factor, PHF				0.89		0.89
Hourly Flow Rate, HFR				7		5
Percent Heavy Vehicles				0		90
Percent Grade (%)		0			0	
Flared Approach: Exists?/Storage			/			No /
Lanes				0		0
Configuration					LR	

Delay, Queue Length, and Level of Service

Approach	EB	WB	Northbound			Southbound		
Movement	1	4	7	8	9	10	11	12
Lane Config	LT						LR	
v (vph)	6						12	
C(m) (vph)	1036						324	
v/c	0.01						0.04	
95% queue length	0.02						0.12	
Control Delay	8.5						16.5	
LOS	A						C	
Approach Delay							16.5	
Approach LOS							C	

HCS2000: Unsignalized Intersections Release 4.1d

TWO-WAY STOP CONTROL SUMMARY

Analyst: J.M. Mark
Agency/Co.: Mark Engineering
Date Performed: 11/17/2009
Analysis Time Period: Weekday Peak Hour
Intersection: Helen St. & Oriole Rd.
Jurisdiction: City of Kawartha Lakes
Units: U. S. Metric
Analysis Year: 2020 Total Traffic
Project ID: Fenelon Falls TIS - 2020TP
East/West Street: Helen Street
North/South Street: Oriole Road
Intersection Orientation: EW Study period (hrs): 0.25

Vehicle Volumes and Adjustments

Major Street: Approach	Eastbound			Westbound		
Movement	1	2	3	4	5	6
	L	T	R	L	T	R
Volume	0	332			418	4
Peak-Hour Factor, PHF	0.93	0.93			0.93	0.93
Hourly Flow Rate, HFR	0	356			449	4
Percent Heavy Vehicles	0	--	--		--	--
Median Type/Storage	Undivided		/			
RT Channelized?						
Lanes	0	1			1	0
Configuration	LT					TR
Upstream Signal?		No			No	

Minor Street: Approach	Northbound			Southbound		
Movement	7	8	9	10	11	12
	L	T	R	L	T	R
Volume				1		12
Peak Hour Factor, PHF				0.93		0.93
Hourly Flow Rate, HFR				1		12
Percent Heavy Vehicles				0		90
Percent Grade (%)		0			0	
Flared Approach: Exists?/Storage			/			No /
Lanes				0		0
Configuration					LR	

Delay, Queue Length, and Level of Service

Approach	EB	WB	Northbound			Southbound		
Movement	1	4	7	8	9	10	11	12
Lane Config	LT						LR	
v (vph)	0						13	
C(m) (vph)	1118						450	
v/c	0.00						0.03	
95% queue length	0.00						0.09	
Control Delay	8.2						13.2	
LOS	A						B	
Approach Delay							13.2	
Approach LOS							B	

HCS2000: Unsignalized Intersections Release 4.1d

TWO-WAY STOP CONTROL SUMMARY

Analyst: J.M. Mark
Agency/Co.: Mark Engineering
Date Performed: 11/17/2009
Analysis Time Period: Saturday Inbound Peak Hour
Intersection: Helen St. & Oriole Rd.
Jurisdiction: City of Kawartha Lakes
Units: U. S. Metric
Analysis Year: 2020 Total Traffic
Project ID: Fenelon Falls TIS - F20TS
East/West Street: Helen Street
North/South Street: Oriole Road
Intersection Orientation: EW Study period (hrs): 0.25

Vehicle Volumes and Adjustments

Major Street: Approach	Eastbound			Westbound		
Movement	1	2	3	4	5	6
	L	T	R	L	T	R
Volume	6	513			500	6
Peak-Hour Factor, PHF	0.89	0.89			0.89	0.89
Hourly Flow Rate, HFR	6	576			561	6
Percent Heavy Vehicles	0	--	--		--	--
Median Type/Storage	Undivided		/			
RT Channelized?						
Lanes	0	1			1	0
Configuration		LT				TR
Upstream Signal?		No			No	

Minor Street: Approach	Northbound			Southbound		
Movement	7	8	9	10	11	12
	L	T	R	L	T	R
Volume				7		5
Peak Hour Factor, PHF				0.89		0.89
Hourly Flow Rate, HFR				7		5
Percent Heavy Vehicles				0		90
Percent Grade (%)		0			0	
Flared Approach: Exists?/Storage				/		No /
Lanes				0		0
Configuration					LR	

Delay, Queue Length, and Level of Service

Approach	EB	WB	Northbound			Southbound		
Movement	1	4	7	8	9	10	11	12
Lane Config	LT						LR	
v (vph)	6						12	
C(m) (vph)	975						253	
v/c	0.01						0.05	
95% queue length	0.02						0.15	
Control Delay	8.7						19.9	
LOS	A						C	
Approach Delay							19.9	
Approach LOS							C	

HCS2000: Unsignalized Intersections Release 4.1d

TWO-WAY STOP CONTROL SUMMARY

Analyst: J.M. Mark
Agency/Co.: Mark Engineering
Date Performed: 9/17/2009
Analysis Time Period: Saturday Outbound Peak Hour
Intersection: Helen St. & Oriole Rd.
Jurisdiction: City of Kawartha Lakes
Units: U. S. Metric
Analysis Year: 2020 Total Traffic
Project ID: Fenelon Falls TIS - F20TT
East/West Street: Helen Street
North/South Street: Oriole Road
Intersection Orientation: EW Study period (hrs): 0.25

Vehicle Volumes and Adjustments

Major Street: Approach	Eastbound			Westbound		
Movement	1	2	3	4	5	6
	L	T	R	L	T	R
Volume	6	450			587	6
Peak-Hour Factor, PHF	0.89	0.89			0.89	0.89
Hourly Flow Rate, HFR	6	505			659	6
Percent Heavy Vehicles	0	--	--		--	--
Median Type/Storage	Undivided		/			
RT Channelized?						
Lanes	0	1			1	0
Configuration	LT					TR
Upstream Signal?		No			No	

Minor Street: Approach	Northbound			Southbound		
Movement	7	8	9	10	11	12
	L	T	R	L	T	R
Volume				7		5
Peak Hour Factor, PHF				0.89		0.89
Hourly Flow Rate, HFR				7		5
Percent Heavy Vehicles				0		90
Percent Grade (%)		0			0	
Flared Approach: Exists?/Storage				/		No /
Lanes				0		0
Configuration					LR	

Delay, Queue Length, and Level of Service

Approach	EB	WB	Northbound			Southbound		
Movement	1	4	7	8	9	10	11	12
Lane Config	LT						LR	
v (vph)	6						12	
C(m) (vph)	897						238	
v/c	0.01						0.05	
95% queue length	0.02						0.16	
Control Delay	9.0						20.9	
LOS	A						C	
Approach Delay							20.9	
Approach LOS							C	

HCS2000: Unsignalized Intersections Release 4.1d

TWO-WAY STOP CONTROL SUMMARY

Analyst: J.M. Mark
Agency/Co.: Mark Engineering
Date Performed: 9/17/2009
Analysis Time Period: Weekday Peak Hour
Intersection: Helen St. & North Street
Jurisdiction: City of Kawartha Lakes
Units: U. S. Metric
Analysis Year: 2010 Background Traffic
Project ID: Fenelon Falls TIS - G10BP
East/West Street: Helen Street
North/South Street: North Street
Intersection Orientation: EW Study period (hrs): 0.25

Vehicle Volumes and Adjustments

Major Street: Approach	Eastbound			Westbound		
Movement	1	2	3	4	5	6
	L	T	R	L	T	R
Volume		199	23	13	233	
Peak-Hour Factor, PHF		0.92	0.92	0.92	0.92	
Hourly Flow Rate, HFR		216	24	14	253	
Percent Heavy Vehicles		--	--	23	--	--
Median Type/Storage	Undivided		/			
RT Channelized?						
Lanes		1	0	0	1	
Configuration			TR		LT	
Upstream Signal?		No			No	

Minor Street: Approach	Northbound			Southbound		
Movement	7	8	9	10	11	12
	L	T	R	L	T	R
Volume	28		21			
Peak Hour Factor, PHF	0.92		0.92			
Hourly Flow Rate, HFR	30		22			
Percent Heavy Vehicles	11		5			
Percent Grade (%)		0			0	
Flared Approach: Exists?/Storage			No /			/
Lanes	0		0			
Configuration		LR				

Delay, Queue Length, and Level of Service

Approach	EB	WB	Northbound			Southbound		
Movement	1	4	7	8	9	10	11	12
Lane Config		LT		LR				
v (vph)		14		52				
C(m) (vph)		1184		579				
v/c		0.01		0.09				
95% queue length		0.04		0.29				
Control Delay		8.1		11.8				
LOS		A		B				
Approach Delay				11.8				
Approach LOS				B				

HCS2000: Unsignalized Intersections Release 4.1d

TWO-WAY STOP CONTROL SUMMARY

Analyst: J.M. Mark
Agency/Co.: Mark Engineering
Date Performed: 9/17/2009
Analysis Time Period: Saturday Peak Hour
Intersection: Helen St. & North Street
Jurisdiction: City of Kawartha Lakes
Units: U. S. Metric
Analysis Year: 2010 Background Traffic
Project ID: Fenelon Falls TIS - G10BS
East/West Street: Helen Street
North/South Street: North Street
Intersection Orientation: EW Study period (hrs): 0.25

Vehicle Volumes and Adjustments

Major Street: Approach	Eastbound			Westbound		
Movement	1	2	3	4	5	6
	L	T	R	L	T	R
Volume		316	37	23	345	
Peak-Hour Factor, PHF		0.89	0.89	0.89	0.89	
Hourly Flow Rate, HFR		355	41	25	387	
Percent Heavy Vehicles		--	--	0	--	--
Median Type/Storage	Undivided		/			
RT Channelized?						
Lanes		1	0	0	1	
Configuration			TR		LT	
Upstream Signal?		No			No	

Minor Street: Approach	Northbound			Southbound		
Movement	7	8	9	10	11	12
	L	T	R	L	T	R
Volume	39		12			
Peak Hour Factor, PHF	0.89		0.89			
Hourly Flow Rate, HFR	43		13			
Percent Heavy Vehicles	0		0			
Percent Grade (%)		0			0	
Flared Approach: Exists?/Storage			No /			/
Lanes	0		0			
Configuration		LR				

Delay, Queue Length, and Level of Service

Approach	EB	WB	Northbound			Southbound		
Movement	1	4	7	8	9	10	11	12
Lane Config		LT		LR				
v (vph)		25		56				
C(m) (vph)		1150		377				
v/c		0.02		0.15				
95% queue length		0.07		0.52				
Control Delay		8.2		16.2				
LOS		A		C				
Approach Delay				16.2				
Approach LOS				C				

HCS2000: Unsignalized Intersections Release 4.1d

TWO-WAY STOP CONTROL SUMMARY

Analyst: J.M. Mark
Agency/Co.: Mark Engineering
Date Performed: 10/17/2009
Analysis Time Period: Weekday Peak Hour
Intersection: Helen St. & North Street
Jurisdiction: City of Kawartha Lakes
Units: U. S. Metric
Analysis Year: 2010 TotalTraffic
Project ID: Fenelon Falls TIS - G10TP
East/West Street: Helen Street
North/South Street: North Street
Intersection Orientation: EW Study period (hrs): 0.25

Vehicle Volumes and Adjustments

Major Street: Approach	Eastbound			Westbound		
Movement	1	2	3	4	5	6
	L	T	R	L	T	R
Volume		210	74	92	248	
Peak-Hour Factor, PHF		0.92	0.92	0.92	0.92	
Hourly Flow Rate, HFR		228	80	99	269	
Percent Heavy Vehicles		--	--	23	--	--
Median Type/Storage	Undivided		/			
RT Channelized?						
Lanes		1	0	0	1	
Configuration			TR		LT	
Upstream Signal?		No			No	

Minor Street: Approach	Northbound			Southbound		
Movement	7	8	9	10	11	12
	L	T	R	L	T	R
Volume	120		151			
Peak Hour Factor, PHF	0.92		0.92			
Hourly Flow Rate, HFR	130		164			
Percent Heavy Vehicles	11		5			
Percent Grade (%)		0			0	
Flared Approach: Exists?/Storage			No /			/
Lanes	0		0			
Configuration		LR				

Delay, Queue Length, and Level of Service

Approach	EB	WB	Northbound			Southbound		
Movement	1	4	7	8	9	10	11	12
Lane Config		LT		LR				
v (vph)		99		294				
C(m) (vph)		1116		479				
v/c		0.09		0.61				
95% queue length		0.29		4.06				
Control Delay		8.5		23.7				
LOS		A		C				
Approach Delay				23.7				
Approach LOS				C				

HCS2000: Unsignalized Intersections Release 4.1d

TWO-WAY STOP CONTROL SUMMARY

Analyst: J.M. Mark
Agency/Co.: Mark Engineering
Date Performed: 10/17/2009
Analysis Time Period: Saturday Inbound Peak Hour
Intersection: Helen St. & North Street
Jurisdiction: City of Kawartha Lakes
Units: U. S. Metric
Analysis Year: 2010 Total Traffic
Project ID: Fenelon Falls TIS - G10TS
East/West Street: Helen Street
North/South Street: North Street
Intersection Orientation: EW Study period (hrs): 0.25

Vehicle Volumes and Adjustments

Major Street: Approach	Eastbound			Westbound		
Movement	1	2	3	4	5	6
	L	T	R	L	T	R
Volume		337	146	117	364	
Peak-Hour Factor, PHF		0.89	0.89	0.89	0.89	
Hourly Flow Rate, HFR		378	164	131	408	
Percent Heavy Vehicles		--	--	0	--	--
Median Type/Storage	Undivided		/			
RT Channelized?						
Lanes		1	0	0	1	
Configuration			TR		LT	
Upstream Signal?		No			No	

Minor Street: Approach	Northbound			Southbound		
Movement	7	8	9	10	11	12
	L	T	R	L	T	R
Volume	84		55			
Peak Hour Factor, PHF	0.89		0.89			
Hourly Flow Rate, HFR	94		61			
Percent Heavy Vehicles	0		0			
Percent Grade (%)		0			0	
Flared Approach: Exists?/Storage			No /			/
Lanes	0		0			
Configuration		LR				

Delay, Queue Length, and Level of Service

Approach	EB	WB	Northbound			Southbound		
Movement	1	4	7	8	9	10	11	12
Lane Config		LT		LR				
v (vph)		131		155				
C(m) (vph)		1016		263				
v/c		0.13		0.59				
95% queue length		0.44		3.43				
Control Delay		9.1		36.6				
LOS		A		E				
Approach Delay				36.6				
Approach LOS				E				

HCS2000: Unsignalized Intersections Release 4.1d

TWO-WAY STOP CONTROL SUMMARY

Analyst: J.M. Mark
Agency/Co.: Mark Engineering
Date Performed: 10/17/2009
Analysis Time Period: Saturday Outbound Peak Hour
Intersection: Helen St. & North Street
Jurisdiction: City of Kawartha Lakes
Units: U. S. Metric
Analysis Year: 2010 Total Traffic
Project ID: Fenelon Falls TIS - G10TT
East/West Street: Helen Street
North/South Street: North Street
Intersection Orientation: EW Study period (hrs): 0.25

Vehicle Volumes and Adjustments

Major Street: Approach	Eastbound			Westbound		
Movement	1	2	3	4	5	6
	L	T	R	L	T	R
Volume		337	83	80	364	
Peak-Hour Factor, PHF		0.95	0.95	0.95	0.95	
Hourly Flow Rate, HFR		354	87	84	383	
Percent Heavy Vehicles		--	--	0	--	--
Median Type/Storage	Undivided		/			
RT Channelized?						
Lanes		1	0	0	1	
Configuration			TR		LT	
Upstream Signal?		No			No	

Minor Street: Approach	Northbound			Southbound		
Movement	7	8	9	10	11	12
	L	T	R	L	T	R
Volume	171		109			
Peak Hour Factor, PHF	0.95		0.95			
Hourly Flow Rate, HFR	180		114			
Percent Heavy Vehicles	0		0			
Percent Grade (%)		0			0	
Flared Approach: Exists?/Storage			No /			/
Lanes	0		0			
Configuration		LR				

Delay, Queue Length, and Level of Service

Approach	EB	WB	Northbound			Southbound		
Movement	1	4	7	8	9	10	11	12
Lane Config		LT		LR				
v (vph)		84		294				
C(m) (vph)		1107		341				
v/c		0.08		0.86				
95% queue length		0.25		7.97				
Control Delay		8.5		55.7				
LOS		A		F				
Approach Delay				55.7				
Approach LOS				F				

HCS2000: Unsignalized Intersections Release 4.1d

TWO-WAY STOP CONTROL SUMMARY

Analyst: J.M. Mark
Agency/Co.: Mark Engineering
Date Performed: 9/17/2009
Analysis Time Period: Weekday Peak Hour
Intersection: Helen St. & North Street
Jurisdiction: City of Kawartha Lakes
Units: U. S. Metric
Analysis Year: 2015 Background Traffic
Project ID: Fenelon Falls TIS - G15BP
East/West Street: Helen Street
North/South Street: North Street
Intersection Orientation: EW Study period (hrs): 0.25

Vehicle Volumes and Adjustments

Major Street: Approach	Eastbound			Westbound		
Movement	1	2	3	4	5	6
	L	T	R	L	T	R
Volume		220	26	15	257	
Peak-Hour Factor, PHF		0.92	0.92	0.92	0.92	
Hourly Flow Rate, HFR		239	28	16	279	
Percent Heavy Vehicles		--	--	5	--	--
Median Type/Storage	Undivided		/			
RT Channelized?						
Lanes		1	0	0	1	
Configuration			TR		LT	
Upstream Signal?		No			No	

Minor Street: Approach	Northbound			Southbound		
Movement	7	8	9	10	11	12
	L	T	R	L	T	R
Volume	30		24			
Peak Hour Factor, PHF	0.92		0.92			
Hourly Flow Rate, HFR	32		26			
Percent Heavy Vehicles	5		5			
Percent Grade (%)		0			0	
Flared Approach: Exists?/Storage			No /			/
Lanes	0		0			
Configuration		LR				

Delay, Queue Length, and Level of Service

Approach	EB	WB	Northbound			Southbound		
Movement	1	4	7	8	9	10	11	12
Lane Config		LT		LR				
v (vph)		16		58				
C(m) (vph)		1245		557				
v/c		0.01		0.10				
95% queue length		0.04		0.35				
Control Delay		7.9		12.2				
LOS		A		B				
Approach Delay				12.2				
Approach LOS				B				

HCS2000: Unsignalized Intersections Release 4.1d

TWO-WAY STOP CONTROL SUMMARY

Analyst: J.M. Mark
Agency/Co.: Mark Engineering
Date Performed: 9/17/2009
Analysis Time Period: Saturday Peak Hour
Intersection: Helen St. & North Street
Jurisdiction: City of Kawartha Lakes
Units: U. S. Metric
Analysis Year: 2015 Background Traffic
Project ID: Fenelon Falls TIS - G15BS
East/West Street: Helen Street
North/South Street: North Street
Intersection Orientation: EW Study period (hrs): 0.25

Vehicle Volumes and Adjustments

Major Street: Approach	Eastbound			Westbound		
Movement	1	2	3	4	5	6
	L	T	R	L	T	R
Volume		349	41	26	381	
Peak-Hour Factor, PHF		0.89	0.89	0.89	0.89	
Hourly Flow Rate, HFR		392	46	29	428	
Percent Heavy Vehicles		--	--	0	--	--
Median Type/Storage	Undivided		/			
RT Channelized?						
Lanes		1	0	0	1	
Configuration			TR		LT	
Upstream Signal?		No			No	

Minor Street: Approach	Northbound			Southbound		
Movement	7	8	9	10	11	12
	L	T	R	L	T	R
Volume	43		14			
Peak Hour Factor, PHF	0.89		0.89			
Hourly Flow Rate, HFR	48		15			
Percent Heavy Vehicles	0		0			
Percent Grade (%)		0			0	
Flared Approach: Exists?/Storage			No /			/
Lanes	0		0			
Configuration		LR				

Delay, Queue Length, and Level of Service

Approach	EB	WB	Northbound			Southbound		
Movement	1	4	7	8	9	10	11	12
Lane Config		LT		LR				
v (vph)		29		63				
C(m) (vph)		1106		336				
v/c		0.03		0.19				
95% queue length		0.08		0.68				
Control Delay		8.3		18.2				
LOS		A		C				
Approach Delay				18.2				
Approach LOS				C				

HCS2000: Unsignalized Intersections Release 4.1d

TWO-WAY STOP CONTROL SUMMARY

Analyst: J.M. Mark
Agency/Co.: Mark Engineering
Date Performed: 10/17/2009
Analysis Time Period: Weekday Peak Hour
Intersection: Helen St. & North Street
Jurisdiction: City of Kawartha Lakes
Units: U. S. Metric
Analysis Year: 2015 TotalTraffic
Project ID: Fenelon Falls TIS - G15TP
East/West Street: Helen Street
North/South Street: North Street
Intersection Orientation: EW Study period (hrs): 0.25

Vehicle Volumes and Adjustments

Major Street: Approach	Eastbound			Westbound		
Movement	1	2	3	4	5	6
	L	T	R	L	T	R
Volume		231	77	94	272	
Peak-Hour Factor, PHF		0.92	0.92	0.92	0.92	
Hourly Flow Rate, HFR		251	83	102	295	
Percent Heavy Vehicles		--	--	5	--	--
Median Type/Storage	Undivided		/			
RT Channelized?						
Lanes		1	0	0	1	
Configuration			TR		LT	
Upstream Signal?		No			No	

Minor Street: Approach	Northbound			Southbound		
Movement	7	8	9	10	11	12
	L	T	R	L	T	R
Volume	122		154			
Peak Hour Factor, PHF	0.92		0.92			
Hourly Flow Rate, HFR	132		167			
Percent Heavy Vehicles	5		5			
Percent Grade (%)		0			0	
Flared Approach: Exists?/Storage			No /			/
Lanes	0		0			
Configuration	LR					

Delay, Queue Length, and Level of Service

Approach	EB	WB	Northbound			Southbound		
Movement	1	4	7	8	9	10	11	12
Lane Config		LT		LR				
v (vph)		102		299				
C(m) (vph)		1176		456				
v/c		0.09		0.66				
95% queue length		0.28		4.62				
Control Delay		8.4		26.7				
LOS		A		D				
Approach Delay				26.7				
Approach LOS				D				

HCS2000: Unsignalized Intersections Release 4.1d

TWO-WAY STOP CONTROL SUMMARY

Analyst: J.M. Mark
Agency/Co.: Mark Engineering
Date Performed: 10/17/2009
Analysis Time Period: Saturday Inbound Peak Hour
Intersection: Helen St. & North Street
Jurisdiction: City of Kawartha Lakes
Units: U. S. Metric
Analysis Year: 2015 Total Traffic
Project ID: Fenelon Falls TIS - G15TS
East/West Street: Helen Street
North/South Street: North Street
Intersection Orientation: EW Study period (hrs): 0.25

Vehicle Volumes and Adjustments

Major Street: Approach	Eastbound			Westbound		
Movement	1	2	3	4	5	6
	L	T	R	L	T	R
Volume		370	150	120	400	
Peak-Hour Factor, PHF		0.89	0.89	0.89	0.89	
Hourly Flow Rate, HFR		415	168	134	449	
Percent Heavy Vehicles		--	--	0	--	--
Median Type/Storage	Undivided		/			
RT Channelized?						
Lanes		1	0	0	1	
Configuration			TR		LT	
Upstream Signal?		No			No	

Minor Street: Approach	Northbound			Southbound		
Movement	7	8	9	10	11	12
	L	T	R	L	T	R
Volume	88		57			
Peak Hour Factor, PHF	0.89		0.89			
Hourly Flow Rate, HFR	98		64			
Percent Heavy Vehicles	0		0			
Percent Grade (%)		0			0	
Flared Approach: Exists?/Storage			No /			/
Lanes	0		0			
Configuration	LR					

Delay, Queue Length, and Level of Service

Approach	EB	WB	Northbound			Southbound		
Movement	1	4	7	8	9	10	11	12
Lane Config		LT		LR				
v (vph)		134		162				
C(m) (vph)		977		233				
v/c		0.14		0.70				
95% queue length		0.47		4.53				
Control Delay		9.3		49.5				
LOS		A		E				
Approach Delay				49.5				
Approach LOS				E				

HCS2000: Unsignalized Intersections Release 4.1d

TWO-WAY STOP CONTROL SUMMARY

Analyst: J.M. Mark
Agency/Co.: Mark Engineering
Date Performed: 10/17/2009
Analysis Time Period: Saturday Outbound Peak Hour
Intersection: Helen St. & North Street
Jurisdiction: City of Kawartha Lakes
Units: U. S. Metric
Analysis Year: 2015 Total Traffic
Project ID: Fenelon Falls TIS - G15TT
East/West Street: Helen Street
North/South Street: North Street
Intersection Orientation: EW Study period (hrs): 0.25

Vehicle Volumes and Adjustments

Major Street: Approach	Eastbound			Westbound		
Movement	1	2	3	4	5	6
	L	T	R	L	T	R
Volume		370	87	83	400	
Peak-Hour Factor, PHF		1.00	1.00	1.00	1.00	
Hourly Flow Rate, HFR		370	87	83	400	
Percent Heavy Vehicles		--	--	0	--	--
Median Type/Storage	Undivided		/			
RT Channelized?						
Lanes		1	0	0	1	
Configuration			TR		LT	
Upstream Signal?		No			No	

Minor Street: Approach	Northbound			Southbound		
Movement	7	8	9	10	11	12
	L	T	R	L	T	R
Volume	175		111			
Peak Hour Factor, PHF	1.00		1.00			
Hourly Flow Rate, HFR	175		111			
Percent Heavy Vehicles	0		0			
Percent Grade (%)		0			0	
Flared Approach: Exists?/Storage			No /			/
Lanes	0		0			
Configuration	LR					

Delay, Queue Length, and Level of Service

Approach	EB	WB	Northbound			Southbound		
Movement	1	4	7	8	9	10	11	12
Lane Config		LT		LR				
v (vph)		83		286				
C(m) (vph)		1092		328				
v/c		0.08		0.87				
95% queue length		0.25		8.06				
Control Delay		8.6		58.8				
LOS		A		F				
Approach Delay				58.8				
Approach LOS				F				

HCS2000: Unsignalized Intersections Release 4.1d

TWO-WAY STOP CONTROL SUMMARY

Analyst: J.M. Mark
Agency/Co.: Mark Engineering
Date Performed: 9/17/2009
Analysis Time Period: Weekday Peak Hour
Intersection: Helen St. & North Street
Jurisdiction: City of Kawartha Lakes
Units: U. S. Metric
Analysis Year: 2020 Background Traffic
Project ID: Fenelon Falls TIS - G20BP
East/West Street: Helen Street
North/South Street: North Street
Intersection Orientation: EW Study period (hrs): 0.25

Vehicle Volumes and Adjustments

Major Street: Approach	Eastbound			Westbound		
Movement	1	2	3	4	5	6
	L	T	R	L	T	R
Volume		242	29	16	283	
Peak-Hour Factor, PHF		0.92	0.92	0.92	0.92	
Hourly Flow Rate, HFR		263	31	17	307	
Percent Heavy Vehicles		--	--	23	--	--
Median Type/Storage	Undivided		/			
RT Channelized?						
Lanes		1	0	0	1	
Configuration			TR		LT	
Upstream Signal?		No			No	

Minor Street: Approach	Northbound			Southbound		
Movement	7	8	9	10	11	12
	L	T	R	L	T	R
Volume	34		26			
Peak Hour Factor, PHF	0.92		0.92			
Hourly Flow Rate, HFR	36		28			
Percent Heavy Vehicles	11		5			
Percent Grade (%)		0			0	
Flared Approach: Exists?/Storage			No /			/
Lanes	0		0			
Configuration		LR				

Delay, Queue Length, and Level of Service

Approach	EB	WB	Northbound			Southbound		
Movement	1	4	7	8	9	10	11	12
Lane Config		LT		LR				
v (vph)		17		64				
C(m) (vph)		1124		511				
v/c		0.02		0.13				
95% queue length		0.05		0.43				
Control Delay		8.3		13.1				
LOS		A		B				
Approach Delay				13.1				
Approach LOS				B				

HCS2000: Unsignalized Intersections Release 4.1d

TWO-WAY STOP CONTROL SUMMARY

Analyst: J.M. Mark
Agency/Co.: Mark Engineering
Date Performed: 9/17/2009
Analysis Time Period: Saturday Peak Hour
Intersection: Helen St. & North Street
Jurisdiction: City of Kawartha Lakes
Units: U. S. Metric
Analysis Year: 2020 Background Traffic
Project ID: Fenelon Falls TIS - G20BS
East/West Street: Helen Street
North/South Street: North Street
Intersection Orientation: EW Study period (hrs): 0.25

Vehicle Volumes and Adjustments

Major Street: Approach	Eastbound			Westbound		
Movement	1	2	3	4	5	6
	L	T	R	L	T	R
Volume		385	45	29	420	
Peak-Hour Factor, PHF		0.89	0.89	0.89	0.89	
Hourly Flow Rate, HFR		432	50	32	471	
Percent Heavy Vehicles		--	--	0	--	--
Median Type/Storage	Undivided		/			
RT Channelized?						
Lanes		1	0	0	1	
Configuration			TR		LT	
Upstream Signal?		No			No	

Minor Street: Approach	Northbound			Southbound		
Movement	7	8	9	10	11	12
	L	T	R	L	T	R
Volume	47		15			
Peak Hour Factor, PHF	0.89		0.89			
Hourly Flow Rate, HFR	52		16			
Percent Heavy Vehicles	0		0			
Percent Grade (%)		0			0	
Flared Approach: Exists?/Storage			No /			/
Lanes	0		0			
Configuration		LR				

Delay, Queue Length, and Level of Service

Approach	EB	WB	Northbound			Southbound		
Movement	1	4	7	8	9	10	11	12
Lane Config		LT		LR				
v (vph)		32		68				
C(m) (vph)		1064		297				
v/c		0.03		0.23				
95% queue length		0.09		0.86				
Control Delay		8.5		20.7				
LOS		A		C				
Approach Delay				20.7				
Approach LOS				C				

HCS2000: Unsignalized Intersections Release 4.1d

TWO-WAY STOP CONTROL SUMMARY

Analyst: J.M. Mark
Agency/Co.: Mark Engineering
Date Performed: 10/17/2009
Analysis Time Period: Weekday Peak Hour
Intersection: Helen St. & North Street
Jurisdiction: City of Kawartha Lakes
Units: U. S. Metric
Analysis Year: 2020 Total Traffic
Project ID: Fenelon Falls TIS - G20TP
East/West Street: Helen Street
North/South Street: North Street
Intersection Orientation: EW Study period (hrs): 0.25

Vehicle Volumes and Adjustments

Major Street: Approach	Eastbound			Westbound		
Movement	1	2	3	4	5	6
	L	T	R	L	T	R
Volume		253	80	95	298	
Peak-Hour Factor, PHF		0.92	0.92	0.92	0.92	
Hourly Flow Rate, HFR		274	86	103	323	
Percent Heavy Vehicles		--	--	5	--	--
Median Type/Storage	Undivided		/			
RT Channelized?						
Lanes		1	0	0	1	
Configuration			TR		LT	
Upstream Signal?		No			No	

Minor Street: Approach	Northbound			Southbound		
Movement	7	8	9	10	11	12
	L	T	R	L	T	R
Volume	126		156			
Peak Hour Factor, PHF	0.92		0.92			
Hourly Flow Rate, HFR	136		169			
Percent Heavy Vehicles	5		5			
Percent Grade (%)		0			0	
Flared Approach: Exists?/Storage			No /			/
Lanes	0		0			
Configuration		LR				

Delay, Queue Length, and Level of Service

Approach	EB	WB	Northbound			Southbound		
Movement	1	4	7	8	9	10	11	12
Lane Config		LT		LR				
v (vph)		103		305				
C(m) (vph)		1148		426				
v/c		0.09		0.72				
95% queue length		0.30		5.54				
Control Delay		8.4		32.0				
LOS		A		D				
Approach Delay				32.0				
Approach LOS				D				

HCS2000: Unsignalized Intersections Release 4.1d

TWO-WAY STOP CONTROL SUMMARY

Analyst: J.M. Mark
Agency/Co.: Mark Engineering
Date Performed: 10/17/2009
Analysis Time Period: Saturday Inbound Peak Hour
Intersection: Helen St. & North Street
Jurisdiction: City of Kawartha Lakes
Units: U. S. Metric
Analysis Year: 2020 Total Traffic
Project ID: Fenelon Falls TIS - G20TS
East/West Street: Helen Street
North/South Street: North Street
Intersection Orientation: EW Study period (hrs): 0.25

Vehicle Volumes and Adjustments

Major Street: Approach	Eastbound			Westbound		
Movement	1	2	3	4	5	6
	L	T	R	L	T	R
Volume		406	154	123	439	
Peak-Hour Factor, PHF		0.90	0.90	0.90	0.90	
Hourly Flow Rate, HFR		451	171	136	487	
Percent Heavy Vehicles		--	--	0	--	--
Median Type/Storage	Undivided		/			
RT Channelized?						
Lanes		1	0	0	1	
Configuration			TR		LT	
Upstream Signal?		No			No	

Minor Street: Approach	Northbound			Southbound		
Movement	7	8	9	10	11	12
	L	T	R	L	T	R
Volume	92		58			
Peak Hour Factor, PHF	0.90		0.90			
Hourly Flow Rate, HFR	102		64			
Percent Heavy Vehicles	0		0			
Percent Grade (%)		0			0	
Flared Approach: Exists?/Storage			No /			/
Lanes	0		0			
Configuration		LR				

Delay, Queue Length, and Level of Service

Approach	EB	WB	Northbound			Southbound		
Movement	1	4	7	8	9	10	11	12
Lane Config		LT		LR				
v (vph)		136		166				
C(m) (vph)		944		207				
v/c		0.14		0.80				
95% queue length		0.50		5.73				
Control Delay		9.5		68.7				
LOS		A		F				
Approach Delay				68.7				
Approach LOS				F				

HCS2000: Unsignalized Intersections Release 4.1d

TWO-WAY STOP CONTROL SUMMARY

Analyst: J.M. Mark
Agency/Co.: Mark Engineering
Date Performed: 10/17/2009
Analysis Time Period: Saturday Outbound Peak Hour
Intersection: Helen St. & North Street
Jurisdiction: City of Kawartha Lakes
Units: U. S. Metric
Analysis Year: 2020 Total Traffic
Project ID: Fenelon Falls TIS - G20TT
East/West Street: Helen Street
North/South Street: North Street
Intersection Orientation: EW Study period (hrs): 0.25

Vehicle Volumes and Adjustments

Major Street: Approach	Eastbound			Westbound		
Movement	1	2	3	4	5	6
	L	T	R	L	T	R
Volume		406	91	86	439	
Peak-Hour Factor, PHF		1.00	1.00	1.00	1.00	
Hourly Flow Rate, HFR		406	91	86	439	
Percent Heavy Vehicles		--	--	0	--	--
Median Type/Storage	Undivided		/			
RT Channelized?						
Lanes		1	0	0	1	
Configuration		TR		LT		
Upstream Signal?		No			No	

Minor Street: Approach	Northbound			Southbound		
Movement	7	8	9	10	11	12
	L	T	R	L	T	R
Volume	179		112			
Peak Hour Factor, PHF	1.00		1.00			
Hourly Flow Rate, HFR	179		112			
Percent Heavy Vehicles	0		0			
Percent Grade (%)		0			0	
Flared Approach: Exists?/Storage			No /			/
Lanes	0		0			
Configuration	LR					

Delay, Queue Length, and Level of Service

Approach	EB	WB	Northbound			Southbound		
Movement	1	4	7	8	9	10	11	12
Lane Config		LT		LR				
v (vph)		86		291				
C(m) (vph)		1051		292				
v/c		0.08		1.00				
95% queue length		0.27		10.38				
Control Delay		8.7		90.9				
LOS		A		F				
Approach Delay				90.9				
Approach LOS				F				

HCS2000: Unsignalized Intersections Release 4.1d

TWO-WAY STOP CONTROL SUMMARY

Analyst: J.M. Mark
Agency/Co.: Mark Engineering
Date Performed: 10/17/2009
Analysis Time Period: Weekday Peak Hour
Intersection: Veterans Way & North St.
Jurisdiction: City of Kawartha Lakes
Units: U. S. Customary
Analysis Year: 2010 Total Traffic
Project ID: Fenelon Falls TIS - H10TP
East/West Street: Veterans Way
North/South Street: North Street
Intersection Orientation: NS Study period (hrs): 0.25

Vehicle Volumes and Adjustments

Major Street: Approach	Northbound			Southbound		
Movement	1	2	3	4	5	6
	L	T	R	L	T	R
Volume	182	74			72	68
Peak-Hour Factor, PHF	0.90	0.90			0.90	0.90
Hourly Flow Rate, HFR	202	82			80	75
Percent Heavy Vehicles	0	--	--		--	--
Median Type/Storage	Undivided		/			
RT Channelized?						
Lanes	0	1			1	0
Configuration	LT					TR
Upstream Signal?		No			No	

Minor Street: Approach	Westbound			Eastbound		
Movement	7	8	9	10	11	12
	L	T	R	L	T	R
Volume				85		167
Peak Hour Factor, PHF				0.90		0.90
Hourly Flow Rate, HFR				94		185
Percent Heavy Vehicles				0		0
Percent Grade (%)		0			0	
Flared Approach: Exists?/Storage			/			No /
Lanes				0		0
Configuration					LR	

Delay, Queue Length, and Level of Service

Approach	NB	SB	Westbound			Eastbound		
Movement	1	4	7	8	9	10	11	12
Lane Config	LT						LR	
v (vph)	202						279	
C(m) (vph)	1438						646	
v/c	0.14						0.43	
95% queue length	0.49						2.18	
Control Delay	7.9						14.7	
LOS	A						B	
Approach Delay							14.7	
Approach LOS							B	

HCS2000: Unsignalized Intersections Release 4.1d

TWO-WAY STOP CONTROL SUMMARY

Analyst: J.M. Mark
Agency/Co.: Mark Engineering
Date Performed: 10/17/2009
Analysis Time Period: Saturday Inbound Peak Hour
Intersection: Veterans Way & North St.
Jurisdiction: City of Kawartha Lakes
Units: U. S. Customary
Analysis Year: 2010 Total Traffic
Project ID: Fenelon Falls TIS - H10TS
East/West Street: Veterans Way
North/South Street: North Street
Intersection Orientation: NS Study period (hrs): 0.25

Vehicle Volumes and Adjustments

Major Street: Approach	Northbound			Southbound		
Movement	1	2	3	4	5	6
	L	T	R	L	T	R
Volume	319	64			50	153
Peak-Hour Factor, PHF	0.90	0.90			0.90	0.90
Hourly Flow Rate, HFR	354	71			55	170
Percent Heavy Vehicles	0	--	--		--	--
Median Type/Storage	Undivided		/			
RT Channelized?						
Lanes	0	1			1	0
Configuration		LT				TR
Upstream Signal?		No			No	

Minor Street: Approach	Westbound			Eastbound		
Movement	7	8	9	10	11	12
	L	T	R	L	T	R
Volume				60		127
Peak Hour Factor, PHF				0.90		0.90
Hourly Flow Rate, HFR				66		141
Percent Heavy Vehicles				0		0
Percent Grade (%)		0			0	
Flared Approach: Exists?/Storage			/			No /
Lanes				0		0
Configuration					LR	

Delay, Queue Length, and Level of Service

Approach	NB	SB	Westbound			Eastbound		
Movement	1	4	7	8	9	10	11	12
Lane Config	LT						LR	
v (vph)	354						207	
C(m) (vph)	1356						462	
v/c	0.26						0.45	
95% queue length	1.05						2.27	
Control Delay	8.6						19.0	
LOS	A						C	
Approach Delay							19.0	
Approach LOS							C	

HCS2000: Unsignalized Intersections Release 4.1d

TWO-WAY STOP CONTROL SUMMARY

Analyst: J.M. Mark
Agency/Co.: Mark Engineering
Date Performed: 10/17/2009
Analysis Time Period: Saturday Outbound Peak Hour
Intersection: Veterans Way & North St.
Jurisdiction: City of Kawartha Lakes
Units: U. S. Customary
Analysis Year: 2010 Total Traffic
Project ID: Fenelon Falls TIS - H10TT
East/West Street: Veterans Way
North/South Street: North Street
Intersection Orientation: NS Study period (hrs): 0.25

Vehicle Volumes and Adjustments

Major Street: Approach	Northbound			Southbound		
Movement	1	2	3	4	5	6
	L	T	R	L	T	R
Volume	119	64			50	53
Peak-Hour Factor, PHF	0.90	0.90			0.90	0.90
Hourly Flow Rate, HFR	132	71			55	58
Percent Heavy Vehicles	0	--	--		--	--
Median Type/Storage	Undivided /					
RT Channelized?						
Lanes	0	1			1	0
Configuration		LT				TR
Upstream Signal?		No			No	

Minor Street: Approach	Westbound			Eastbound		
Movement	7	8	9	10	11	12
	L	T	R	L	T	R
Volume				201		418
Peak Hour Factor, PHF				0.90		0.90
Hourly Flow Rate, HFR				223		464
Percent Heavy Vehicles				0		0
Percent Grade (%)		0			0	
Flared Approach: Exists?/Storage			/			No /
Lanes				0		0
Configuration					LR	

Delay, Queue Length, and Level of Service

Approach	NB	SB	Westbound			Eastbound		
Movement	1	4	7	8	9	10	11	12
Lane Config	LT						LR	
v (vph)	132						687	
C(m) (vph)	1489						777	
v/c	0.09						0.88	
95% queue length	0.29						11.38	
Control Delay	7.7						33.8	
LOS	A						D	
Approach Delay							33.8	
Approach LOS							D	

HCS2000: Unsignalized Intersections Release 4.1d

TWO-WAY STOP CONTROL SUMMARY

Analyst: J.M. Mark
Agency/Co.: Mark Engineering
Date Performed: 10/17/2009
Analysis Time Period: Weekday Peak Hour
Intersection: Veterans Way & North St.
Jurisdiction: City of Kawartha Lakes
Units: U. S. Customary
Analysis Year: 2015 Total Traffic
Project ID: Fenelon Falls TIS - H15TP
East/West Street: Veterans Way
North/South Street: North Street
Intersection Orientation: NS Study period (hrs): 0.25

Vehicle Volumes and Adjustments

Major Street: Approach	Northbound			Southbound		
Movement	1	2	3	4	5	6
	L	T	R	L	T	R
Volume	182	78			75	68
Peak-Hour Factor, PHF	0.90	0.90			0.90	0.90
Hourly Flow Rate, HFR	202	86			83	75
Percent Heavy Vehicles	0	--	--		--	--
Median Type/Storage	Undivided		/			
RT Channelized?						
Lanes	0	1			1	0
Configuration	LT					TR
Upstream Signal?		No			No	

Minor Street: Approach	Westbound			Eastbound		
Movement	7	8	9	10	11	12
	L	T	R	L	T	R
Volume				85		167
Peak Hour Factor, PHF				0.90		0.90
Hourly Flow Rate, HFR				94		185
Percent Heavy Vehicles				0		0
Percent Grade (%)		0			0	
Flared Approach: Exists?/Storage				/		No /
Lanes				0		0
Configuration					LR	

Delay, Queue Length, and Level of Service

Approach	NB	SB	Westbound			Eastbound		
Movement	1	4	7	8	9	10	11	12
Lane Config	LT						LR	
v (vph)	202						279	
C(m) (vph)	1434						642	
v/c	0.14						0.43	
95% queue length	0.49						2.20	
Control Delay	7.9						14.8	
LOS	A						B	
Approach Delay							14.8	
Approach LOS							B	

HCS2000: Unsignalized Intersections Release 4.1d

TWO-WAY STOP CONTROL SUMMARY

Analyst: J.M. Mark
Agency/Co.: Mark Engineering
Date Performed: 10/17/2009
Analysis Time Period: Saturday Inbound Peak Hour
Intersection: Veterans Way & North St.
Jurisdiction: City of Kawartha Lakes
Units: U. S. Customary
Analysis Year: 2015 Total Traffic
Project ID: Fenelon Falls TIS - H15TS
East/West Street: Veterans Way
North/South Street: North Street
Intersection Orientation: NS Study period (hrs): 0.25

Vehicle Volumes and Adjustments

Major Street: Approach	Northbound			Southbound		
Movement	1	2	3	4	5	6
	L	T	R	L	T	R
Volume	319	68			53	153
Peak-Hour Factor, PHF	0.90	0.90			0.90	0.90
Hourly Flow Rate, HFR	354	75			58	170
Percent Heavy Vehicles	0	--	--		--	--
Median Type/Storage	Undivided		/			
RT Channelized?						
Lanes	0	1			1	0
Configuration		LT				TR
Upstream Signal?		No			No	

Minor Street: Approach	Westbound			Eastbound		
Movement	7	8	9	10	11	12
	L	T	R	L	T	R
Volume				60		127
Peak Hour Factor, PHF				0.90		0.90
Hourly Flow Rate, HFR				66		141
Percent Heavy Vehicles				0		0
Percent Grade (%)		0			0	
Flared Approach: Exists?/Storage			/			No /
Lanes				0		0
Configuration					LR	

Delay, Queue Length, and Level of Service

Approach	NB	SB	Westbound			Eastbound		
Movement	1	4	7	8	9	10	11	12
Lane Config	LT						LR	
v (vph)	354						207	
C(m) (vph)	1352						458	
v/c	0.26						0.45	
95% queue length	1.06						2.30	
Control Delay	8.6						19.2	
LOS	A						C	
Approach Delay							19.2	
Approach LOS							C	

HCS2000: Unsignalized Intersections Release 4.1d

TWO-WAY STOP CONTROL SUMMARY

Analyst: J.M. Mark
Agency/Co.: Mark Engineering
Date Performed: 9/17/2009
Analysis Time Period: Saturday Outbound Peak Hour
Intersection: Veterans Way & North St.
Jurisdiction: City of Kawartha Lakes
Units: U. S. Customary
Analysis Year: 2015 Total Traffic
Project ID: Fenelon Falls TIS - H15TT
East/West Street: Veterans Way
North/South Street: North Street
Intersection Orientation: NS Study period (hrs): 0.25

Vehicle Volumes and Adjustments

Major Street: Approach	Northbound			Southbound		
Movement	1	2	3	4	5	6
	L	T	R	L	T	R
Volume	119	68			53	53
Peak-Hour Factor, PHF	0.90	0.90			0.90	0.90
Hourly Flow Rate, HFR	132	75			58	58
Percent Heavy Vehicles	0	--	--		--	--
Median Type/Storage	Undivided		/			
RT Channelized?						
Lanes	0	1			1	0
Configuration		LT				TR
Upstream Signal?		No			No	

Minor Street: Approach	Westbound			Eastbound		
Movement	7	8	9	10	11	12
	L	T	R	L	T	R
Volume				201		418
Peak Hour Factor, PHF				0.90		0.90
Hourly Flow Rate, HFR				223		464
Percent Heavy Vehicles				0		0
Percent Grade (%)		0			0	
Flared Approach: Exists?/Storage			/			No /
Lanes				0		0
Configuration					LR	

Delay, Queue Length, and Level of Service

Approach	NB	SB	Westbound			Eastbound		
Movement	1	4	7	8	9	10	11	12
Lane Config	LT						LR	
v (vph)	132						687	
C(m) (vph)	1485						772	
v/c	0.09						0.89	
95% queue length	0.29						11.59	
Control Delay	7.7						34.7	
LOS	A						D	
Approach Delay							34.7	
Approach LOS							D	

HCS2000: Unsignalized Intersections Release 4.1d

TWO-WAY STOP CONTROL SUMMARY

Analyst:	J.M. Mark
Agency/Co.:	Mark Engineering
Date Performed:	10/17/2009
Analysis Time Period:	Weekday Peak Hour
Intersection:	Veterans Way & North St.
Jurisdiction:	City of Kawartha Lakes
Units: U. S. Customary	
Analysis Year:	2020 Total Traffic
Project ID: Fenelon Falls TIS - H20TP	
East/West Street:	Veterans Way
North/South Street:	North Street
Intersection Orientation: NS	Study period (hrs): 0.25

Vehicle Volumes and Adjustments

Major Street: Approach	Northbound			Southbound		
Movement	1	2	3	4	5	6
	L	T	R	L	T	R
Volume	182	82			78	68
Peak-Hour Factor, PHF	0.90	0.90			0.90	0.90
Hourly Flow Rate, HFR	202	91			86	75
Percent Heavy Vehicles	0	--	--		--	--
Median Type/Storage	Undivided /					
RT Channelized?						
Lanes	0	1			1	0
Configuration		LT				TR
Upstream Signal?		No			No	

Minor Street: Approach	Westbound			Eastbound		
Movement	7	8	9	10	11	12
	L	T	R	L	T	R
Volume				85		167
Peak Hour Factor, PHF				0.90		0.90
Hourly Flow Rate, HFR				94		185
Percent Heavy Vehicles				0		0
Percent Grade (%)		0			0	
Flared Approach: Exists?/Storage				/		No /
Lanes				0		0
Configuration					LR	

Delay, Queue Length, and Level of Service

Approach	NB	SB	Westbound			Eastbound		
Movement	1	4	7	8	9	10	11	12
Lane Config	LT						LR	
v (vph)	202						279	
C(m) (vph)	1430						636	
v/c	0.14						0.44	
95% queue length	0.49						2.23	
Control Delay	7.9						15.0+	
LOS	A						C	
Approach Delay							15.0+	
Approach LOS							C	

HCS2000: Unsignalized Intersections Release 4.1d

TWO-WAY STOP CONTROL SUMMARY

Analyst: J.M. Mark
Agency/Co.: Mark Engineering
Date Performed: 10/17/2009
Analysis Time Period: Saturday Inbound Peak Hour
Intersection: Veterans Way & North St.
Jurisdiction: City of Kawartha Lakes
Units: U. S. Customary
Analysis Year: 2020 Total Traffic
Project ID: Fenelon Falls TIS - H20TS
East/West Street: Veterans Way
North/South Street: North Street
Intersection Orientation: NS Study period (hrs): 0.25

Vehicle Volumes and Adjustments

Major Street: Approach	Northbound			Southbound		
Movement	1	2	3	4	5	6
	L	T	R	L	T	R
Volume	319	73			58	153
Peak-Hour Factor, PHF	0.90	0.90			0.90	0.90
Hourly Flow Rate, HFR	354	81			64	170
Percent Heavy Vehicles	0	--	--		--	--
Median Type/Storage	Undivided		/			
RT Channelized?						
Lanes	0	1			1	0
Configuration		LT				TR
Upstream Signal?		No			No	

Minor Street: Approach	Westbound			Eastbound		
Movement	7	8	9	10	11	12
	L	T	R	L	T	R
Volume				60		127
Peak Hour Factor, PHF				0.90		0.90
Hourly Flow Rate, HFR				66		141
Percent Heavy Vehicles				0		0
Percent Grade (%)		0			0	
Flared Approach: Exists?/Storage			/			No /
Lanes				0		0
Configuration					LR	

Delay, Queue Length, and Level of Service

Approach	NB	SB	Westbound			Eastbound		
Movement	1	4	7	8	9	10	11	12
Lane Config	LT						LR	
v (vph)	354						207	
C(m) (vph)	1345						451	
v/c	0.26						0.46	
95% queue length	1.06						2.36	
Control Delay	8.6						19.6	
LOS	A						C	
Approach Delay							19.6	
Approach LOS							C	

HCS2000: Unsignalized Intersections Release 4.1d

TWO-WAY STOP CONTROL SUMMARY

Analyst: J.M. Mark
Agency/Co.: Mark Engineering
Date Performed: 10/17/2009
Analysis Time Period: Saturday Outbound Peak Hour
Intersection: Veterans Way & North St.
Jurisdiction: City of Kawartha Lakes
Units: U. S. Customary
Analysis Year: 2020 Total Traffic
Project ID: Fenelon Falls TIS - H20TT
East/West Street: Veterans Way
North/South Street: North Street
Intersection Orientation: NS Study period (hrs): 0.25

Vehicle Volumes and Adjustments

Major Street: Approach	Northbound			Southbound		
Movement	1	2	3	4	5	6
	L	T	R	L	T	R
Volume	119	73			58	53
Peak-Hour Factor, PHF	0.90	0.90			0.90	0.90
Hourly Flow Rate, HFR	132	81			64	58
Percent Heavy Vehicles	0	--	--		--	--
Median Type/Storage	Undivided		/			
RT Channelized?						
Lanes	0	1			1	0
Configuration		LT				TR
Upstream Signal?		No			No	

Minor Street: Approach	Westbound			Eastbound		
Movement	7	8	9	10	11	12
	L	T	R	L	T	R
Volume				201		418
Peak Hour Factor, PHF				0.90		0.90
Hourly Flow Rate, HFR				223		464
Percent Heavy Vehicles				0		0
Percent Grade (%)		0			0	
Flared Approach: Exists?/Storage			/			No /
Lanes				0		0
Configuration					LR	

Delay, Queue Length, and Level of Service

Approach	NB	SB	Westbound			Eastbound		
Movement	1	4	7	8	9	10	11	12
Lane Config	LT						LR	
v (vph)	132						687	
C(m) (vph)	1478						763	
v/c	0.09						0.90	
95% queue length	0.29						11.99	
Control Delay	7.7						36.4	
LOS	A						E	
Approach Delay							36.4	
Approach LOS							E	

HCS2000: Unsignalized Intersections Release 4.1d

ALL-WAY STOP CONTROL(AWSC) ANALYSIS

Analyst: J.M. Mark
Agency/Co.: Mark Engineering
Date Performed: 10/17/2009
Analysis Time Period: Weekday Peak Hour
Intersection: Veterans Way & North St.
Jurisdiction: City of Kawartha Lakes
Units: U. S. Metric
Analysis Year: 2010 Total Traffic
Project ID: Fenelon Falls TIS - H10TPa
East/West Street: Veterans Way
North/South Street: North Street

Worksheet 2 - Volume Adjustments and Site Characteristics

	Eastbound			Westbound			Northbound			Southbound		
	L	T	R	L	T	R	L	T	R	L	T	R
Volume	85	167	0	0	182	74	0	0	0	72	0	68

% Thrus Left Lane

	Eastbound		Westbound		Northbound		Southbound	
	L1	L2	L1	L2	L1	L2	L1	L2
Configuration	LT		TR				LR	
PHF	0.90		0.90				0.90	
Flow Rate	279		284				155	
% Heavy Veh	0		0				0	
No. Lanes	1		1				1	
Opposing-Lanes	1		1				0	
Conflicting-lanes	1		1				1	
Geometry group	1		1				1	

Duration, T 0.25 hrs.

Worksheet 4 - Departure Headway and Service Time

	Eastbound		Westbound		Northbound		Southbound	
	L1	L2	L1	L2	L1	L2	L1	L2
Flow rate	279		284				155	
hd, initial value	3.20	3.20	3.20	3.20	3.20	3.20	3.20	3.20
x, initial	0.25		0.25				0.14	
hd, final value	4.72		4.49				5.01	
x, final value	0.37		0.35				0.22	
Move-up time, m	2.0		2.0				2.0	
Service Time	2.7		2.5				3.0	

Worksheet 5 - Capacity and Level of Service

	Eastbound		Westbound		Northbound		Southbound	
	L1	L2	L1	L2	L1	L2	L1	L2
Flow Rate	279		284				155	
Service Time	2.7		2.5				3.0	
Utilization, x	0.37		0.35				0.22	
Dep. headway, hd	4.72		4.49				5.01	
Capacity	529		534				405	
Delay	10.41		9.92				9.39	
LOS	B		A				A	
Approach:								
Delay	10.41		9.92				9.39	
LOS	B		A				A	

Intersection Delay 10.00- Intersection LOS A

HCS2000: Unsignalized Intersections Release 4.1d

ALL-WAY STOP CONTROL(AWSC) ANALYSIS

Analyst: J.M. Mark
Agency/Co.: Mark Engineering
Date Performed: 10/17/2009
Analysis Time Period: Saturday Inbound Peak Hour
Intersection: Veterans Way & North St.
Jurisdiction: City of Kawartha Lakes
Units: U. S. Metric
Analysis Year: 2010 Total Traffic
Project ID: Fenelon Falls TIS - H10TSa
East/West Street: Veterans Way
North/South Street: North Street

Worksheet 2 - Volume Adjustments and Site Characteristics

	Eastbound			Westbound			Northbound			Southbound		
	L	T	R	L	T	R	L	T	R	L	T	R
Volume	60	127	0	0	319	64	0	0	0	50	0	153

% Thrus Left Lane

	Eastbound		Westbound		Northbound		Southbound	
	L1	L2	L1	L2	L1	L2	L1	L2
Configuration	LT		TR				LR	
PHF	0.90		0.90				0.90	
Flow Rate	207		425				225	
% Heavy Veh	0		0				0	
No. Lanes	1		1				1	
Opposing-Lanes	1		1				0	
Conflicting-lanes	1		1				1	
Geometry group	1		1				1	

Duration, T 0.25 hrs.

Worksheet 4 - Departure Headway and Service Time

	Eastbound		Westbound		Northbound		Southbound	
	L1	L2	L1	L2	L1	L2	L1	L2
Flow rate	207		425				225	
hd, initial value	3.20	3.20	3.20	3.20	3.20	3.20	3.20	3.20
x, initial	0.18		0.38				0.20	
hd, final value	5.12		4.70				5.02	
x, final value	0.29		0.55				0.31	
Move-up time, m	2.0		2.0				2.0	
Service Time	3.1		2.7				3.0	

Worksheet 5 - Capacity and Level of Service

	Eastbound		Westbound		Northbound		Southbound	
	L1	L2	L1	L2	L1	L2	L1	L2
Flow Rate	207		425				225	
Service Time	3.1		2.7				3.0	
Utilization, x	0.29		0.55				0.31	
Dep. headway, hd	5.12		4.70				5.02	
Capacity	457		675				475	
Delay	10.23		13.39				10.30	
LOS	B		B				B	
Approach:								
Delay	10.23		13.39				10.30	
LOS	B		B				B	

Intersection Delay 11.81 Intersection LOS B

HCS2000: Unsignalized Intersections Release 4.1d

ALL-WAY STOP CONTROL(AWSC) ANALYSIS

Analyst: J.M. Mark
Agency/Co.: Mark Engineering
Date Performed: 10/17/2009
Analysis Time Period: Saturday Outbound Peak Hour
Intersection: Veterans Way & North St.
Jurisdiction: City of Kawartha Lakes
Units: U. S. Metric
Analysis Year: 2010 Total Traffic
Project ID: Fenelon Falls TIS - H10TTa
East/West Street: Veterans Way
North/South Street: North Street

Worksheet 2 - Volume Adjustments and Site Characteristics

	Eastbound			Westbound			Northbound			Southbound		
	L	T	R	L	T	R	L	T	R	L	T	R
Volume	201	418	0	0	119	64	0	0	0	50	0	53

% Thrus Left Lane

	Eastbound		Westbound		Northbound		Southbound	
	L1	L2	L1	L2	L1	L2	L1	L2
Configuration	LT		TR				LR	
PHF	0.90		0.90				0.90	
Flow Rate	687		203				113	
% Heavy Veh	0		0				0	
No. Lanes	1		1				1	
Opposing-Lanes	1		1				0	
Conflicting-lanes	1		1				1	
Geometry group	1		1				1	

Duration, T 0.25 hrs.

Worksheet 4 - Departure Headway and Service Time

	Eastbound		Westbound		Northbound		Southbound	
	L1	L2	L1	L2	L1	L2	L1	L2
Flow rate	687		203				113	
hd, initial value	3.20	3.20	3.20	3.20	3.20	3.20	3.20	3.20
x, initial	0.61		0.18				0.10	
hd, final value	4.56		4.83				5.73	
x, final value	0.87		0.27				0.18	
Move-up time, m	2.0		2.0				2.0	
Service Time	2.6		2.8				3.7	

Worksheet 5 - Capacity and Level of Service

	Eastbound		Westbound		Northbound		Southbound	
	L1	L2	L1	L2	L1	L2	L1	L2
Flow Rate	687		203				113	
Service Time	2.6		2.8				3.7	
Utilization, x	0.87		0.27				0.18	
Dep. headway, hd	4.56		4.83				5.73	
Capacity	785		453				363	
Delay	29.86		9.63				9.99	
LOS	D		A				A	
Approach:								
Delay	29.86		9.63				9.99	
LOS	D		A				A	

Intersection Delay 23.52 Intersection LOS C

HCS2000: Unsignalized Intersections Release 4.1d

ALL-WAY STOP CONTROL(AWSC) ANALYSIS

Analyst: J.M. Mark
Agency/Co.: Mark Engineering
Date Performed: 10/17/2009
Analysis Time Period: Weekday Peak Hour
Intersection: Veterans Way & North St.
Jurisdiction: City of Kawartha Lakes
Units: U. S. Metric
Analysis Year: 2015 Total Traffic
Project ID: Fenelon Falls TIS - H15TPa
East/West Street: Veterans Way
North/South Street: North Street

Worksheet 2 - Volume Adjustments and Site Characteristics

	Eastbound			Westbound			Northbound			Southbound		
	L	T	R	L	T	R	L	T	R	L	T	R
Volume	85	167	0	0	182	78	0	0	0	75	0	68

% Thrus Left Lane

	Eastbound		Westbound		Northbound		Southbound	
	L1	L2	L1	L2	L1	L2	L1	L2
Configuration	LT		TR				LR	
PHF	0.90		0.90				0.90	
Flow Rate	279		288				158	
% Heavy Veh	0		0				0	
No. Lanes	1		1				1	
Opposing-Lanes	1		1				0	
Conflicting-lanes	1		1				1	
Geometry group	1		1				1	

Duration, T 0.25 hrs.

Worksheet 4 - Departure Headway and Service Time

	Eastbound		Westbound		Northbound		Southbound	
	L1	L2	L1	L2	L1	L2	L1	L2
Flow rate	279		288				158	
hd, initial value	3.20	3.20	3.20	3.20	3.20	3.20	3.20	3.20
x, initial	0.25		0.26				0.14	
hd, final value	4.73		4.49				5.03	
x, final value	0.37		0.36				0.22	
Move-up time, m	2.0		2.0				2.0	
Service Time	2.7		2.5				3.0	

Worksheet 5 - Capacity and Level of Service

	Eastbound		Westbound		Northbound		Southbound	
	L1	L2	L1	L2	L1	L2	L1	L2
Flow Rate	279		288				158	
Service Time	2.7		2.5				3.0	
Utilization, x	0.37		0.36				0.22	
Dep. headway, hd	4.73		4.49				5.03	
Capacity	529		538				408	
Delay	10.45		9.99				9.45	
LOS	B		A				A	
Approach:								
Delay	10.45		9.99				9.45	
LOS	B		A				A	

Intersection Delay 10.05 Intersection LOS B

HCS2000: Unsignalized Intersections Release 4.1d

ALL-WAY STOP CONTROL(AWSC) ANALYSIS

Analyst: J.M. Mark
Agency/Co.: Mark Engineering
Date Performed: 10/17/2009
Analysis Time Period: Saturday Inbound Peak Hour
Intersection: Veterans Way & North St.
Jurisdiction: City of Kawartha Lakes
Units: U. S. Metric
Analysis Year: 2015 Total Traffic
Project ID: Fenelon Falls TIS - H15TSa
East/West Street: Veterans Way
North/South Street: North Street

Worksheet 2 - Volume Adjustments and Site Characteristics

	Eastbound			Westbound			Northbound			Southbound		
	L	T	R	L	T	R	L	T	R	L	T	R
Volume	60	127	0	0	319	68	0	0	0	53	0	153

% Thrus Left Lane

	Eastbound		Westbound		Northbound		Southbound	
	L1	L2	L1	L2	L1	L2	L1	L2
Configuration	LT		TR				LR	
PHF	0.90		0.90				0.90	
Flow Rate	207		429				228	
% Heavy Veh	0		0				0	
No. Lanes	1		1				1	
Opposing-Lanes	1		1				0	
Conflicting-lanes	1		1				1	
Geometry group	1		1				1	

Duration, T 0.25 hrs.

Worksheet 4 - Departure Headway and Service Time

	Eastbound		Westbound		Northbound		Southbound	
	L1	L2	L1	L2	L1	L2	L1	L2
Flow rate	207		429				228	
hd, initial value	3.20	3.20	3.20	3.20	3.20	3.20	3.20	3.20
x, initial	0.18		0.38				0.20	
hd, final value	5.13		4.71				5.04	
x, final value	0.30		0.56				0.32	
Move-up time, m	2.0		2.0				2.0	
Service Time	3.1		2.7				3.0	

Worksheet 5 - Capacity and Level of Service

	Eastbound		Westbound		Northbound		Southbound	
	L1	L2	L1	L2	L1	L2	L1	L2
Flow Rate	207		429				228	
Service Time	3.1		2.7				3.0	
Utilization, x	0.30		0.56				0.32	
Dep. headway, hd	5.13		4.71				5.04	
Capacity	457		679				478	
Delay	10.27		13.54				10.38	
LOS	B		B				B	
Approach:								
Delay	10.27		13.54				10.38	
LOS	B		B				B	

Intersection Delay 11.92 Intersection LOS B

HCS2000: Unsignalized Intersections Release 4.1d

ALL-WAY STOP CONTROL(AWSC) ANALYSIS

Analyst: J.M. Mark
Agency/Co.: Mark Engineering
Date Performed: 10/17/2009
Analysis Time Period: Saturday Outbound Peak Hour
Intersection: Veterans Way & North St.
Jurisdiction: City of Kawartha Lakes
Units: U. S. Metric
Analysis Year: 2015 Total Traffic
Project ID: Fenelon Falls TIS - H15TTa
East/West Street: Veterans Way
North/South Street: North Street

Worksheet 2 - Volume Adjustments and Site Characteristics

	Eastbound			Westbound			Northbound			Southbound		
	L	T	R	L	T	R	L	T	R	L	T	R
Volume	201	418	0	0	119	68	0	0	0	53	0	53

% Thrus Left Lane

	Eastbound		Westbound		Northbound		Southbound	
	L1	L2	L1	L2	L1	L2	L1	L2
Configuration	LT		TR				LR	
PHF	0.90		0.90				0.90	
Flow Rate	687		207				116	
% Heavy Veh	0		0				0	
No. Lanes	1		1				1	
Opposing-Lanes	1		1				0	
Conflicting-lanes	1		1				1	
Geometry group	1		1				1	

Duration, T 0.25 hrs.

Worksheet 4 - Departure Headway and Service Time

	Eastbound		Westbound		Northbound		Southbound	
	L1	L2	L1	L2	L1	L2	L1	L2
Flow rate	687		207				116	
hd, initial value	3.20	3.20	3.20	3.20	3.20	3.20	3.20	3.20
x, initial	0.61		0.18				0.10	
hd, final value	4.58		4.84				5.76	
x, final value	0.87		0.28				0.19	
Move-up time, m	2.0		2.0				2.0	
Service Time	2.6		2.8				3.8	

Worksheet 5 - Capacity and Level of Service

	Eastbound		Westbound		Northbound		Southbound	
	L1	L2	L1	L2	L1	L2	L1	L2
Flow Rate	687		207				116	
Service Time	2.6		2.8				3.8	
Utilization, x	0.87		0.28				0.19	
Dep. headway, hd	4.58		4.84				5.76	
Capacity	782		457				366	
Delay	30.32		9.69				10.07	
LOS	D		A				B	
Approach:								
Delay	30.32		9.69				10.07	
LOS	D		A				B	

Intersection Delay 23.77 Intersection LOS C

HCS2000: Unsignalized Intersections Release 4.1d

ALL-WAY STOP CONTROL(AWSC) ANALYSIS

Analyst: J.M. Mark
Agency/Co.: Mark Engineering
Date Performed: 10/17/2009
Analysis Time Period: Weekday Peak Hour
Intersection: Veterans Way & North St.
Jurisdiction: City of Kawartha Lakes
Units: U. S. Metric
Analysis Year: 2020 Total Traffic
Project ID: Fenelon Falls TIS - H20TPa
East/West Street: Veterans Way
North/South Street: North Street

Worksheet 2 - Volume Adjustments and Site Characteristics

	Eastbound			Westbound			Northbound			Southbound		
	L	T	R	L	T	R	L	T	R	L	T	R
Volume	85	167	0	0	182	82	0	0	0	78	0	68

% Thrus Left Lane

	Eastbound		Westbound		Northbound		Southbound	
	L1	L2	L1	L2	L1	L2	L1	L2
Configuration	LT		TR				LR	
PHF	0.90		0.90				0.90	
Flow Rate	279		293				161	
% Heavy Veh	0		0				0	
No. Lanes	1		1				1	
Opposing-Lanes	1		1				0	
Conflicting-lanes	1		1				1	
Geometry group	1		1				1	

Duration, T 0.25 hrs.

Worksheet 4 - Departure Headway and Service Time

	Eastbound		Westbound		Northbound		Southbound	
	L1	L2	L1	L2	L1	L2	L1	L2
Flow rate	279		293				161	
hd, initial value	3.20	3.20	3.20	3.20	3.20	3.20	3.20	3.20
x, initial	0.25		0.26				0.14	
hd, final value	4.75		4.50				5.05	
x, final value	0.37		0.37				0.23	
Move-up time, m	2.0		2.0				2.0	
Service Time	2.8		2.5				3.1	

Worksheet 5 - Capacity and Level of Service

	Eastbound		Westbound		Northbound		Southbound	
	L1	L2	L1	L2	L1	L2	L1	L2
Flow Rate	279		293				161	
Service Time	2.8		2.5				3.1	
Utilization, x	0.37		0.37				0.23	
Dep. headway, hd	4.75		4.50				5.05	
Capacity	529		543				411	
Delay	10.49		10.07				9.52	
LOS	B		B				A	
Approach:								
Delay	10.49		10.07				9.52	
LOS	B		B				A	

Intersection Delay 10.11 Intersection LOS B

HCS2000: Unsignalized Intersections Release 4.1d

ALL-WAY STOP CONTROL(AWSC) ANALYSIS

Analyst: J.M. Mark
Agency/Co.: Mark Engineering
Date Performed: 10/17/2009
Analysis Time Period: Saturday Inbound Peak Hour
Intersection: Veterans Way & North St.
Jurisdiction: City of Kawartha Lakes
Units: U. S. Metric
Analysis Year: 2020 Total Traffic
Project ID: Fenelon Falls TIS - H20TSa
East/West Street: Veterans Way
North/South Street: North Street

Worksheet 2 - Volume Adjustments and Site Characteristics

	Eastbound			Westbound			Northbound			Southbound		
	L	T	R	L	T	R	L	T	R	L	T	R
Volume	60	127	0	0	319	73	0	0	0	58	0	153

% Thrus Left Lane

	Eastbound		Westbound		Northbound		Southbound	
	L1	L2	L1	L2	L1	L2	L1	L2
Configuration	LT		TR				LR	
PHF	0.90		0.90				0.90	
Flow Rate	207		435				234	
% Heavy Veh	0		0				0	
No. Lanes	1		1				1	
Opposing-Lanes	1		1				0	
Conflicting-lanes	1		1				1	
Geometry group	1		1				1	

Duration, T 0.25 hrs.

Worksheet 4 - Departure Headway and Service Time

	Eastbound		Westbound		Northbound		Southbound	
	L1	L2	L1	L2	L1	L2	L1	L2
Flow rate	207		435				234	
hd, initial value	3.20	3.20	3.20	3.20	3.20	3.20	3.20	3.20
x, initial	0.18		0.39				0.21	
hd, final value	5.17		4.72				5.07	
x, final value	0.30		0.57				0.33	
Move-up time, m	2.0		2.0				2.0	
Service Time	3.2		2.7				3.1	

Worksheet 5 - Capacity and Level of Service

	Eastbound		Westbound		Northbound		Southbound	
	L1	L2	L1	L2	L1	L2	L1	L2
Flow Rate	207		435				234	
Service Time	3.2		2.7				3.1	
Utilization, x	0.30		0.57				0.33	
Dep. headway, hd	5.17		4.72				5.07	
Capacity	457		685				484	
Delay	10.34		13.81				10.55	
LOS	B		B				B	
Approach:								
Delay	10.34		13.81				10.55	
LOS	B		B				B	

Intersection Delay 12.12 Intersection LOS B

HCS2000: Unsignalized Intersections Release 4.1d

ALL-WAY STOP CONTROL(AWSC) ANALYSIS

Analyst: J.M. Mark
Agency/Co.: Mark Engineering
Date Performed: 10/17/2009
Analysis Time Period: Saturday Outbound Peak Hour
Intersection: Veterans Way & North St.
Jurisdiction: City of Kawartha Lakes
Units: U. S. Metric
Analysis Year: 2020 Total Traffic
Project ID: Fenelon Falls TIS - H20TTa
East/West Street: Veterans Way
North/South Street: North Street

Worksheet 2 - Volume Adjustments and Site Characteristics

	Eastbound			Westbound			Northbound			Southbound		
	L	T	R	L	T	R	L	T	R	L	T	R
Volume	201	418	0	0	119	73	0	0	0	58	0	53

% Thrus Left Lane

	Eastbound		Westbound		Northbound		Southbound	
	L1	L2	L1	L2	L1	L2	L1	L2
Configuration	LT		TR				LR	
PHF	0.90		0.90				0.90	
Flow Rate	687		213				122	
% Heavy Veh	0		0				0	
No. Lanes	1		1				1	
Opposing-Lanes	1		1				0	
Conflicting-lanes	1		1				1	
Geometry group	1		1				1	

Duration, T 0.25 hrs.

Worksheet 4 - Departure Headway and Service Time

	Eastbound		Westbound		Northbound		Southbound	
	L1	L2	L1	L2	L1	L2	L1	L2
Flow rate	687		213				122	
hd, initial value	3.20	3.20	3.20	3.20	3.20	3.20	3.20	3.20
x, initial	0.61		0.19				0.11	
hd, final value	4.61		4.86				5.80	
x, final value	0.88		0.29				0.20	
Move-up time, m	2.0		2.0				2.0	
Service Time	2.6		2.9				3.8	

Worksheet 5 - Capacity and Level of Service

	Eastbound		Westbound		Northbound		Southbound	
	L1	L2	L1	L2	L1	L2	L1	L2
Flow Rate	687		213				122	
Service Time	2.6		2.9				3.8	
Utilization, x	0.88		0.29				0.20	
Dep. headway, hd	4.61		4.86				5.80	
Capacity	777		463				372	
Delay	31.22		9.81				10.22	
LOS	D		A				B	
Approach:								
Delay	31.22		9.81				10.22	
LOS	D		A				B	

Intersection Delay 24.25 Intersection LOS C

HCS2000: Unsignalized Intersections Release 4.1d

ROUNDABOUT ANALYSIS

Analyst: J.M. Mark
Agency/Co.: Mark Engineering
Date Performed: 10/17/2009
Analysis Time Period: Weekday Peak Hour
Intersection: Veterans Way & North St.
Jurisdiction: City of Kawartha Lanes
Units: U. S. Metric
Analysis Year: 2010 Total Traffic
Project ID: Fenelon Falls TIS H10TPr
East/West Street: Veterans Way
North/South Street: North Street

Volumes and Adjustment

	Eastbound			Westbound			Northbound			Southbound		
	L	T	R	L	T	R	L	T	R	L	T	R
Volume	85	167	0	0	182	74	0	0	0	72	0	68
PHF	0.90	0.90	0.90	0.90	0.90	0.90	0.90	0.90	0.90	0.90	0.90	0.90
Flow Rate	94	185	0	0	202	82	0	0	0	80	0	75

	Eastbound	Westbound	Northbound	Southbound
Approach Flow Rate	279	284	0	155
Conflicting Circulating Flow	80	94	359	202

Critical Gap and Follow-up Time

Critical Gap (sec):				
Upper bound	4.10	4.10	4.10	4.10
Lower bound	4.60	4.60	4.60	4.60
Follow-up Time (sec):				
Upper bound	2.60	2.60	2.60	2.60
Lower bound	3.10	3.10	3.10	3.10

Results: Capacity and v/c Ratio

Capacity (Eq. 10-124):				
Upper bound	1300	1286	1044	1182
Lower bound	1084	1072	853	977
v/c Ratio:				
Upper bound	0.21	0.22	0.00	0.13
Lower bound	0.26	0.26	0.00	0.16

HCS2000: Unsignalized Intersections Release 4.1d

ROUNDABOUT ANALYSIS

Analyst: J.M. Mark
Agency/Co.: Mark Engineering
Date Performed: 10/17/2009
Analysis Time Period: Saturday Inbound Peak Hour
Intersection: Veterans Way & North St.
Jurisdiction: City of Kawartha Lanes
Units: U. S. Metric
Analysis Year: 2010 Total Traffic
Project ID: Fenelon Falls TIS H10TSr
East/West Street: Veterans Way
North/South Street: North Street

Volumes and Adjustment

	Eastbound			Westbound			Northbound			Southbound		
	L	T	R	L	T	R	L	T	R	L	T	R
Volume	60	127	0	0	319	64	0	0	0	50	0	153
PHF	0.90	0.90	0.90	0.90	0.90	0.90	0.90	0.90	0.90	0.90	0.90	0.90
Flow Rate	66	141	0	0	354	71	0	0	0	55	0	170

	Eastbound	Westbound	Northbound	Southbound
Approach Flow Rate	207	425	0	225
Conflicting Circulating Flow	55	66	262	354

Critical Gap and Follow-up Time

	Eastbound	Westbound	Northbound	Southbound
Critical Gap (sec):				
Upper bound	4.10	4.10	4.10	4.10
Lower bound	4.60	4.60	4.60	4.60
Follow-up Time (sec):				
Upper bound	2.60	2.60	2.60	2.60
Lower bound	3.10	3.10	3.10	3.10

Results: Capacity and v/c Ratio

	Eastbound	Westbound	Northbound	Southbound
Capacity (Eq. 10-124):				
Upper bound	1326	1315	1127	1048
Lower bound	1108	1097	928	857
v/c Ratio:				
Upper bound	0.16	0.32	0.00	0.21
Lower bound	0.19	0.39	0.00	0.26

HCS2000: Unsignalized Intersections Release 4.1d

ROUNDABOUT ANALYSIS

Analyst: J.M. Mark
Agency/Co.: Mark Engineering
Date Performed: 10/17/2009
Analysis Time Period: Saturday Outbound Peak Hour
Intersection: Veterans Way & North St.
Jurisdiction: City of Kawartha Lanes
Units: U. S. Metric
Analysis Year: 2010 Total Traffic
Project ID: Fenelon Falls TIS H10TTr
East/West Street: Veterans Way
North/South Street: North Street

Volumes and Adjustment

	Eastbound			Westbound			Northbound			Southbound		
	L	T	R	L	T	R	L	T	R	L	T	R
Volume	201	418	0	0	119	64	0	0	0	50	0	53
PHF	0.90	0.90	0.90	0.90	0.90	0.90	0.90	0.90	0.90	0.90	0.90	0.90
Flow Rate	223	464	0	0	132	71	0	0	0	55	0	58

	Eastbound	Westbound	Northbound	Southbound
Approach Flow Rate	687	203	0	113
Conflicting Circulating Flow	55	223	742	132

Critical Gap and Follow-up Time

Critical Gap (sec):				
Upper bound	4.10	4.10	4.10	4.10
Lower bound	4.60	4.60	4.60	4.60
Follow-up Time (sec):				
Upper bound	2.60	2.60	2.60	2.60
Lower bound	3.10	3.10	3.10	3.10

Results: Capacity and v/c Ratio

Capacity (Eq. 10-124):				
Upper bound	1326	1162	768	1249
Lower bound	1108	959	608	1037
v/c Ratio:				
Upper bound	0.52	0.17	0.00	0.09
Lower bound	0.62	0.21	0.00	0.11

HCS2000: Unsignalized Intersections Release 4.1d

ROUNDABOUT ANALYSIS

Analyst: J.M. Mark
Agency/Co.: Mark Engineering
Date Performed: 10/17/2009
Analysis Time Period: Weekday Peak Hour
Intersection: Veterans Way & North St.
Jurisdiction: City of Kawartha Lanes
Units: U. S. Metric
Analysis Year: 2015 Total Traffic
Project ID: Fenelon Falls TIS H15TPr
East/West Street: Veterans Way
North/South Street: North Street

Volumes and Adjustment

	Eastbound			Westbound			Northbound			Southbound		
	L	T	R	L	T	R	L	T	R	L	T	R
Volume	85	167	0	0	182	78	0	0	0	75	0	68
PHF	0.90	0.90	0.90	0.90	0.90	0.90	0.90	0.90	0.90	0.90	0.90	0.90
Flow Rate	94	185	0	0	202	86	0	0	0	83	0	75

	Eastbound	Westbound	Northbound	Southbound
Approach Flow Rate	279	288	0	158
Conflicting Circulating Flow	83	94	362	202

Critical Gap and Follow-up Time

Critical Gap (sec):				
Upper bound	4.10	4.10	4.10	4.10
Lower bound	4.60	4.60	4.60	4.60
Follow-up Time (sec):				
Upper bound	2.60	2.60	2.60	2.60
Lower bound	3.10	3.10	3.10	3.10

Results: Capacity and v/c Ratio

Capacity (Eq. 10-124):				
Upper bound	1297	1286	1041	1182
Lower bound	1082	1072	851	977
v/c Ratio:				
Upper bound	0.22	0.22	0.00	0.13
Lower bound	0.26	0.27	0.00	0.16

HCS2000: Unsignalized Intersections Release 4.1d

ROUNDABOUT ANALYSIS

Analyst: J.M. Mark
Agency/Co.: Mark Engineering
Date Performed: 10/17/2009
Analysis Time Period: Saturday Inbound Peak Hour
Intersection: Veterans Way & North St.
Jurisdiction: City of Kawartha Lanes
Units: U. S. Metric
Analysis Year: 2015 Total Traffic
Project ID: Fenelon Falls TIS H15TSr
East/West Street: Veterans Way
North/South Street: North Street

Volumes and Adjustment

	Eastbound			Westbound			Northbound			Southbound		
	L	T	R	L	T	R	L	T	R	L	T	R
Volume	60	127	0	0	319	68	0	0	0	53	0	153
PHF	0.90	0.90	0.90	0.90	0.90	0.90	0.90	0.90	0.90	0.90	0.90	0.90
Flow Rate	66	141	0	0	354	75	0	0	0	58	0	170

	Eastbound	Westbound	Northbound	Southbound
Approach Flow Rate	207	429	0	228
Conflicting Circulating Flow	58	66	265	354

Critical Gap and Follow-up Time

Critical Gap (sec):				
Upper bound	4.10	4.10	4.10	4.10
Lower bound	4.60	4.60	4.60	4.60
Follow-up Time (sec):				
Upper bound	2.60	2.60	2.60	2.60
Lower bound	3.10	3.10	3.10	3.10

Results: Capacity and v/c Ratio

Capacity (Eq. 10-124):				
Upper bound	1323	1315	1125	1048
Lower bound	1105	1097	925	857
v/c Ratio:				
Upper bound	0.16	0.33	0.00	0.22
Lower bound	0.19	0.39	0.00	0.27

HCS2000: Unsignalized Intersections Release 4.1d

ROUNDABOUT ANALYSIS

Analyst: J.M. Mark
Agency/Co.: Mark Engineering
Date Performed: 10/17/2009
Analysis Time Period: Saturday Outbound Peak Hour
Intersection: Veterans Way & North St.
Jurisdiction: City of Kawartha Lanes
Units: U. S. Metric
Analysis Year: 2015 Total Traffic
Project ID: Fenelon Falls TIS H15TTr
East/West Street: Veterans Way
North/South Street: North Street

Volumes and Adjustment

	Eastbound			Westbound			Northbound			Southbound		
	L	T	R	L	T	R	L	T	R	L	T	R
Volume	201	418	0	0	119	68	0	0	0	53	0	53
PHF	0.90	0.90	0.90	0.90	0.90	0.90	0.90	0.90	0.90	0.90	0.90	0.90
Flow Rate	223	464	0	0	132	75	0	0	0	58	0	58

	Eastbound	Westbound	Northbound	Southbound
Approach Flow Rate	687	207	0	116
Conflicting Circulating Flow	58	223	745	132

Critical Gap and Follow-up Time

Critical Gap (sec):				
Upper bound	4.10	4.10	4.10	4.10
Lower bound	4.60	4.60	4.60	4.60
Follow-up Time (sec):				
Upper bound	2.60	2.60	2.60	2.60
Lower bound	3.10	3.10	3.10	3.10

Results: Capacity and v/c Ratio

Capacity (Eq. 10-124):				
Upper bound	1323	1162	766	1249
Lower bound	1105	959	607	1037
v/c Ratio:				
Upper bound	0.52	0.18	0.00	0.09
Lower bound	0.62	0.22	0.00	0.11

HCS2000: Unsignalized Intersections Release 4.1d

ROUNDABOUT ANALYSIS

Analyst: J.M. Mark
Agency/Co.: Mark Engineering
Date Performed: 10/17/2009
Analysis Time Period: Weekday Peak Hour
Intersection: Veterans Way & North St.
Jurisdiction: City of Kawartha Lanes
Units: U. S. Metric
Analysis Year: 2020 Total Traffic
Project ID: Fenelon Falls TIS H20TPr
East/West Street: Veterans Way
North/South Street: North Street

Volumes and Adjustment

	Eastbound			Westbound			Northbound			Southbound		
	L	T	R	L	T	R	L	T	R	L	T	R
Volume	85	167	0	0	182	82	0	0	0	78	0	68
PHF	0.90	0.90	0.90	0.90	0.90	0.90	0.90	0.90	0.90	0.90	0.90	0.90
Flow Rate	94	185	0	0	202	91	0	0	0	86	0	75

	Eastbound	Westbound	Northbound	Southbound
Approach Flow Rate	279	293	0	161
Conflicting Circulating Flow	86	94	365	202

Critical Gap and Follow-up Time

Critical Gap (sec):				
Upper bound	4.10	4.10	4.10	4.10
Lower bound	4.60	4.60	4.60	4.60
Follow-up Time (sec):				
Upper bound	2.60	2.60	2.60	2.60
Lower bound	3.10	3.10	3.10	3.10

Results: Capacity and v/c Ratio

Capacity (Eq. 10-124):				
Upper bound	1294	1286	1039	1182
Lower bound	1079	1072	848	977
v/c Ratio:				
Upper bound	0.22	0.23	0.00	0.14
Lower bound	0.26	0.27	0.00	0.16

HCS2000: Unsignalized Intersections Release 4.1d

ROUNDABOUT ANALYSIS

Analyst: J.M. Mark
Agency/Co.: Mark Engineering
Date Performed: 10/17/2009
Analysis Time Period: Saturday Inbound Peak Hour
Intersection: Veterans Way & North St.
Jurisdiction: City of Kawartha Lanes
Units: U. S. Metric
Analysis Year: 2020 Total Traffic
Project ID: Fenelon Falls TIS H20TSr
East/West Street: Veterans Way
North/South Street: North Street

Volumes and Adjustment

	Eastbound			Westbound			Northbound			Southbound		
	L	T	R	L	T	R	L	T	R	L	T	R
Volume	60	127	0	0	319	73	0	0	0	58	0	153
PHF	0.90	0.90	0.90	0.90	0.90	0.90	0.90	0.90	0.90	0.90	0.90	0.90
Flow Rate	66	141	0	0	354	81	0	0	0	64	0	170

	Eastbound	Westbound	Northbound	Southbound
Approach Flow Rate	207	435	0	234
Conflicting Circulating Flow	64	66	271	354

Critical Gap and Follow-up Time

Critical Gap (sec):				
Upper bound	4.10	4.10	4.10	4.10
Lower bound	4.60	4.60	4.60	4.60
Follow-up Time (sec):				
Upper bound	2.60	2.60	2.60	2.60
Lower bound	3.10	3.10	3.10	3.10

Results: Capacity and v/c Ratio

Capacity (Eq. 10-124):				
Upper bound	1317	1315	1119	1048
Lower bound	1099	1097	920	857
v/c Ratio:				
Upper bound	0.16	0.33	0.00	0.22
Lower bound	0.19	0.40	0.00	0.27

HCS2000: Unsignalized Intersections Release 4.1d

ROUNDABOUT ANALYSIS

Analyst: J.M. Mark
Agency/Co.: Mark Engineering
Date Performed: 10/17/2009
Analysis Time Period: Saturday Outbound Peak Hour
Intersection: Veterans Way & North St.
Jurisdiction: City of Kawartha Lanes
Units: U. S. Metric
Analysis Year: 2020 Total Traffic
Project ID: Fenelon Falls TIS H20TTr
East/West Street: Veterans Way
North/South Street: North Street

Volumes and Adjustment

	Eastbound			Westbound			Northbound			Southbound		
	L	T	R	L	T	R	L	T	R	L	T	R
Volume	201	418	0	0	119	73	0	0	0	58	0	53
PHF	0.90	0.90	0.90	0.90	0.90	0.90	0.90	0.90	0.90	0.90	0.90	0.90
Flow Rate	223	464	0	0	132	81	0	0	0	64	0	58

	Eastbound	Westbound	Northbound	Southbound
Approach Flow Rate	687	213	0	122
Conflicting Circulating Flow	64	223	751	132

Critical Gap and Follow-up Time

Critical Gap (sec):				
Upper bound	4.10	4.10	4.10	4.10
Lower bound	4.60	4.60	4.60	4.60
Follow-up Time (sec):				
Upper bound	2.60	2.60	2.60	2.60
Lower bound	3.10	3.10	3.10	3.10

Results: Capacity and v/c Ratio

Capacity (Eq. 10-124):				
Upper bound	1317	1162	762	1249
Lower bound	1099	959	604	1037
v/c Ratio:				
Upper bound	0.52	0.18	0.00	0.10
Lower bound	0.63	0.22	0.00	0.12

Appendix B
Study Terms of Reference

Fenelon Falls Flood Plain Mapping Project
Terms of Reference (January 2016)

Overview

The City of Kawartha Lakes in partnership with Kawartha Conservation has identified the need to undertake floodplain studies for a number of subwatersheds within the City of Kawartha Lakes in order to generate Regulatory floodlines. Ten (10) flood-prone watersheds have been identified which require new or updated mapping. The Regulatory analysis (greater of Timmins or 1: 100 events) is needed to facilitate planning activities for future growth where development pressures exist associated with the regulatory flood plain and to protect public health and existing property.

Objectives

This Terms of Reference is intended to refine and streamline the completion of the flood plain studies with the experience gained through the completion of the Sinister and Ops #1 Drain/Jennings Creek Flood Plain Mapping Studies. In the summer of 2013 the Technical Committee had a number of documents peer reviewed to assist in project direction and deliverables.

Flood plain mapping studies consist of four major components:

- hydrologic analysis: A computer model calculates the response of a watershed to major climatic events. Peak flows at key nodes along the river/creek for specified probabilities, are input to the hydraulic model.
- hydraulic analysis: A computer model defines the depth and width of flow in the river for the hydrologic input and/or other pertinent factors.
- topographic mapping: The output from the hydraulic studies in the form of water surface profiles for the 1:100 year and Regional floods is applied to a detailed topographic map to delineate the extent of flood water levels on the flood plain.
- public information: A minimum of one open house or Public Information Session is held to create public awareness about the project and address any questions that may arise. The purpose of public consultation is to ensure that concerns and issues are identified and addressed appropriately.

The specific objectives for the projects are as follows:

- generate runoff hydrographs for each catchment within the watershed
- determine the peak flows at key nodes along the watercourse
- identify and map the Regulatory flood line extents using a one dimensional static model in a technically defendable manner
- identify high risk areas within the flood line
- appropriately communicate the results of the study with the general public and stakeholders
- provide high level recommendations that can be used to develop flood plain policies

- Note: the recommendations provided will inform the development of flood plain policies, however, policy development is not an outcome of the technical committee specifically. A separate sub-committee or group may be required to develop specific floodplain policies.

Tasks Required for Study Completion

Task 1: Project Initiation Meeting (#1):

- Meet with the Technical Team for project initiation
- Review all available existing background material
- Determine the final project requirements including survey requirements
- Review and approve project schedules
- If, following the meeting, there are any substantial changes to the scope of the study, staff will submit a revised work plan and schedule for review and approval.

Task 2: Background data review and windshield survey

- Collect all available background data from KRCA and CKL files (i.e. reports, hydraulic models, mapping, etc.).
- Carry out thorough review: summarize findings and note data gaps
- Windshield survey of the study area to:
  - gain understanding of the existing hydrologic/hydraulic conditions
  - discover any data gaps for survey
- Acquire GIS base layers
  - Vendor-derived DEM
  - Creek centreline
  - Road layout
  - Land use
  - Soil type
  - Survey data
  - Building footprints
  - Secondary Plan
  - Official Plan
  - LiDAR air photos
  - LiDAR data collection limit
  - SCOOP photos and data (if required)
- Create survey reports (structures and cross-sections)

Task 3: Second technical committee meeting

- Discuss:
  - progress to date
  - project Terms of Reference
  - project timelines
  - resolve any possible problems

Task 4: Digital Elevation Model (DEM) verification & creation

- Carry out Quality Control (Q/C) check of the vendor-derived DEM, using Q/C survey data
- Create hydro-enforced DEM using structure survey data

Task 5: Process hydrologic data

- Place key flow nodes as directed by engineer
- Delineate sub-catchments

Task 6: Excel calculations

- Modify look-up tables (if req'd)
- Define sub-catchment flowpaths
- Extract data from GIS to fill Excel spreadsheets that calculate hydrology model input parameters

Task 7: Draft hydrology model

- Code in Visual Ott-HYMO 3.0
- Run 2-100 and Timmins storms for varying time lengths (6-, 12-, and 24-hour) AES, SCS, and Chicago design storms
- Create technical memo summarizing draft model results

Task 8: Third technical committee meeting

- Discuss results of draft hydrology model
- Review project progress and revise project schedule, if required

Task 9: Draft Hydrology peer review

- Revise model as per technical committee comments, if required
- Write draft hydrology report
- Submit model and draft hydrology report to peer reviewer
- Revise model & report as per peer reviewer comments

Task 10: Draft Hydraulic model

- Create DEM, if required
- Create new model using HEC-RAS 4.0
    - Cut cross-sections from GIS base
    - Incorporate survey data into cross-sections
    - Code culverts and bridges
    - Create input flow files
    - Define boundary conditions
- Create flood figures/maps
- Create technical memo summarizing draft model results

Task 11: Fourth technical committee meeting

- Discuss results of draft hydraulic model
- Review project progress and revise project schedule, if required

Task 12: Draft Hydraulic peer review

- Revise model as per technical committee comments, if required
- Write draft hydraulic report with draft flood maps
- Submit model and draft hydraulic report to peer reviewer
- Revise model & report as per peer reviewer comments

Task 13: Final consolidated report

- Consolidate the hydrology and hydraulic reports into one
- Carry out sensitivity analyses for hydrology and hydraulic models
- Create final draft flood maps
- Submit model and report to peer reviewer
- Revise models & report as per peer reviewer comments

Task 14: Fifth technical meeting

- Review all peer review comments and resulting changes
- Review final flood plain maps
- Discuss public meeting requirements

Task 15: KRCA Board meeting

- Prepare PowerPoint presentation for meeting
- Brief the KRCA board as to outcomes of study

Task 16: CKL Council meeting (if required)

- Prepare PowerPoint presentation for meeting
- Brief the council as to outcomes of study

Task 17: Public consultation

- Prepare boards for meeting
- Prepare presentations
- Explain to the public as to outcomes of study

Task 18: Project wrap-up meeting with Technical Committee (if required)

- Discuss

Specific Deliverables

The following deliverables will be presented to the City of Kawartha Lakes upon completion of each study area:

- 1 hard copy DEM Q/C report
- Five (5) hard copies of the final flood plain study report and two (2) hard copies of the technical appendices
- Regulatory flood plain mapping in accordance with KRCA specifications (2 hard copies; all *.shp files and *.pdf map sheets on CD or DVD)
- Final peer review report, and
- Public consultation report

RECEIVED
JAN 15 2016
Kawartha Conservation

HYDROLOGY AND HYDRAULICS ASSESSMENTS PEER REVIEW

PROFESSIONAL SERVICES PROPOSAL

Prepared for:

KAWARTHA CONSERVATION
277 Kenrei Road
Lindsay, ON K9V 4R1

GRECK AND ASSOCIATES LIMITED
WATER RESOURCES AND ENVIRONMENTAL ENGINEERING

Prepared by:

57 Mill Street North, Suite 208
Brampton, Ontario
L6X 1S9

January 2016
Project: 369P

1 CONTENTS

2 INTRODUCTION 1

3 QUALIFICATIONS AND CAPABILITIES 2

3.1 Project Firm 2

3.2 Project Team 2

3.3 Project Experience 4

4 PEER REVIEW METHODOLOGY 6

4.1 Methodology 6

4.2 Deliverables 7

5 PROPOSED SCHEDULE AND MEETINGS 7

6 FEE PROPOSAL 7

7 APPENDIX 11

HYDROLOGY AND HYDRAULICS ASSESSMENTS PEER REVIEW

2 INTRODUCTION

Kawartha Conservation is currently working on the Flood Plain Mapping Study within the City of Kawartha Lakes. This study is undertaking a number of hydrological and hydraulic assessments within the City of Kawartha Lakes region to ensure that all municipal and watershed planning initiatives have a reliable framework on which to prepare and implement their solutions for the protection of the community from flooding hazards. Hydrological and hydraulic assessments include the calculation of existing and future high flows in defined streams and rivers and routing of those flows through the flood plains.

Currently the Kawartha Conservation is working on two main project areas; Fenelon Falls North (Fenelon Creek) and Omemee (Omemee East Tributary) which are the third and fourth study areas out of ten designated flood damage centers. A draft Hydrologic Report and corresponding Hydraulic Model for Fenelon Creek has been completed. A draft Hydraulic Report and Hydraulic Model for the Omemee East Tributary is expected to be completed by Kawartha Conservation in early 2016. The Omemee Flood Plain Mapping Study will commence upon creation and finalization of QA/QC of the Omemee DEM.

Kawartha Conservation is requesting that a peer review of the Fenelon Falls North and Omemee flood mapping studies be undertaken by a suitably qualified professional.

The goals of the peer review are:

- Ensure consistency with standards and generally accepted approaches;
- Validate the work plan/planned deliverables;
- Ensure scientifically defensible results.

The following document presents our proposal to provide professional engineering services to undertake and support the Kawartha Conservation in achieving these objectives. Our proposal has been prepared based on the Terms of Reference and previous work experience with several similar projects.

Greck and Associates Limited have no known conflicts of interest in completing any component of this project. We do not anticipate a conflict of interest with the proposed study and will ensure that no potential or actual conflicts of interest arise over the course of the study.

3 QUALIFICATIONS AND CAPABILITIES

3.1 PROJECT FIRM

GRECK AND ASSOCIATES LIMITED specializes in the provision of professional water resources services to public and private industries. The size, location and specialization of our firm allow us to offer personalized services conveniently and efficiently. The company brings staff with more than 35 years experience in the field of water resources and environmental engineering.

Specific areas of expertise include:

- Watershed hydrology, river hydraulics and floodplain mapping;
- Natural channel design, stabilization, erosion control and watercourse rehabilitation;
- Urban stormwater best management planning, design and retrofit;
- Hydraulic analysis and design of dams, culverts, weirs, sewers and fishways;
- Fish barrier mitigation and fishways;
- Hydraulic assessment of municipal sewer infrastructure, and flood relief projects.

We provide services in project planning, research, systems analysis, environmental assessment, detail design, approvals and construction inspection. We are proud to have been relied on by municipalities, regulatory agencies, NGO's and private organizations for over 15 years. We are dedicated to meeting and exceeding our clients' needs while providing high quality and reliable services on time and on budget.

Greck and Associates Limited have prepared floodline mapping for a variety of small and large scale projects in the Greater Toronto Area (GTA). We have been retained by several conservation authorities including and municipalities including the City of Kawartha Lakes to provided new and updated floodline mapping as well as address complex flood hazard situations. We have been retained to provide peer review services to the KRCA and Credit Valley Conservation.

Further details can be found in the enclosed corporate brochure.

3.2 PROJECT TEAM

Greck and Associates Limited will provide an experienced and capable project team. Each member of the project team has had direct local and international experience on similar projects. A brief description of each member is presented below. Resumes presenting the academic and professional history of the team members are attached.

Mr. Brian Greck, P. Eng. **Project Manager/Senior Water Resources Engineer**

Mr. Greck is President of Greck and Associates Limited and has more than 35 years of experience in water resources and environmental engineering. He will be responsible for overseeing all aspects of the peer review. Mr. Greck has considerable hydrologic and hydraulic modeling and floodline mapping experience gained with projects for public agencies and private firms.

Mr. Greck has completed several studies which have required an in depth understanding of flood hazard regulations in Ontario. This experience is important to understanding the applications and limitations with defining regulatory flood hazard areas.

Of particular value to this project is Mr. Greck's recent experience with the completion of over 100 map sheets for the TRCA on the Upper Humber River, Upper Duffins Creek, Etobicoke Creek and Mimico Creek watersheds. In these assignments Mr. Greck completed hydraulic model conversions, prepared new hydraulic models, field inspections, and floodline maps in digital format.

Furthermore, over the past 18 years Mr. Greck has completed numerous hydraulic analyses of stream systems and floodlines throughout Ontario as part of various urban developments, floodplain mapping and environmental restoration projects. Studies include:

- Jennings Creek Floodline mapping, Woods of Jennings Creek (KRCA).
- Corbett Creek Watershed Hydrology and Floodline Mapping Update (CLOCA).
- Empire Communities, Mimico Creek Spill Hazard Mitigation Plan (SCRACA).
- Goodman and Oshawa Creek Two Zone Flood Plain Study (CLOCA).
- Errol Creek Hydrology and Floodline Mapping (SCRCA).

Mr. Greck recently provided peer review services to for Credit Valley Conservation. These services included review of hydrologic modelling for twelve small tributaries of Lake Ontario and review of floodline mapping for a reach of the Credit River.

Richard Brunton, BEng (Hons), E.I.T. **Water Resources and Design Engineer**

Mr. Brunton of Greck and Associates Limited has six years of experience in water resources engineering, with specific experience in hydrology, channel hydraulics, flood hazard assessment, watershed and stormwater management, channel stabilisation and remediation and hydraulic structure design. Mr. Brunton will provide technical assistance with peer review including review of the hydrological and hydraulic models and input data. Mr. Brunton has experience in floodline mapping and hazard assessment including one and two-dimensional steady and unsteady state flood modeling using a range of software including Visual Otthymo and HEC-Ras.

Over the past six years Mr. Brunton has completed numerous floodline mapping analyses of stream systems and throughout Ontario and New Zealand as part of various urban developments and restoration projects. Studies include:

- Bookbanks Park: Deerlick Creek Floodline Mapping, Toronto, TRCA;
- Wilson Avenue Flood Hazard Assessment, Toronto, Time Development Group;
- Stormwater Management Study Northwood Industrial Park, City of Oshawa;
- 2D Flood Hazard Mapping of Avoca and Heathcote Catchments, Christchurch City Council (New Zealand);
- Wai-iti Stream Earthquake Rehabilitation, Christchurch City Council (New Zealand).

3.3 PROJECT EXPERIENCE

Relevant projects completed by members of the project team are presented in this section.

Peer Review Services
Client: Credit Valley Conservation

Greck and Associates Limited have on several occasions been retained by CVC to provide peer review services. These services have included review of hydrologic and hydraulic models and floodline mapping. We were also asked to provide our professional opinion on hydraulic analysis as they pertain to flood hazard protection policy.

OPS#1 Drain Peer Review and Flood Hazard Management Guidelines
Client: City of Kawartha Lakes

Greck and Associates Limited were retained by the City of Kawartha Lakes to conduct a peer review of floodline mapping prepared for the OPS#1 Municipal Drain. The firm was subsequently retained to develop Flood Hazard Management Guidelines for the Ops#1 Drain watershed. These guidelines were approved an adopted for use by the Kawartha Lakes Region Conservation Authority and the City of Kawartha Lakes.

Jennings Creek Floodplain Mapping and Flood Relief Analysis
Client: Dunster Investments

Greck and Associates Limited prepared floodline mapping for Jennings Creek located in the City of Kawartha Lakes. The approved mapping is being used to regulate urban developments. The work also examined alternative flood relief measures to reduce current hazards brought about by severally undersized culverts.

Etobicoke Creek and Mimico Creek Watersheds Floodline Mapping Update
Client: Toronto Region Conservation Authority

Greck and Associates Limited recently completed updated floodline mapping for the Etobicoke Creek and Mimico Creek watersheds. The tasks completed included developing a new georeferenced HEC RAS hydraulic model from existing digital topographic mapping in the municipalities of Toronto, Mississauga and Brampton, field inspection of all bridge, culvert and weir structures, preparation of digital floodlines, preparation of summary tables and a summary report.

Upper Duffins Creek and Upper Humber River Floodline Mapping Update
Client: Toronto Region Conservation Authority

Greck and Associates Limited completed the update for 25 map sheets on the Duffins Creek Watershed. The tasks in this assignment included converting existing Hec 2 files to HEC RAS format, updating and validating the HEC RAS model, field inspection of all bridge structures, preparation of digital floodlines, preparation of summary tables and preparation of a summary report. The same tasks were completed for 28 map sheets on the upper Humber River watershed.

Corbett Creek Watershed Hydrology and Floodline Mapping Update
Client: Central Lake Ontario Conservation Authority

Greck and Associates Limited prepared an updated watershed hydrology and river hydraulics models for the Corbett Creek Watershed for the purpose of preparing new floodline mapping. A new hydrology model was prepared using VO2 software and a new HEC RAS model was developed. New floodline mapping was prepared on 1:2000 mapping in AutoCAD format.

Two Zone Flood Plain Study for Portions of the Goodman and Oshawa Creeks
Client: Central Lake Ontario Conservation Authority

Greck and Associates Limited completed a two-zone flood plain study for the Phase 2 area of the Goodman Creek and Oshawa Creek flood hazard area in the City of Oshawa. The study was used to develop special policy for this flood hazard area. The assignment included review of existing hydraulic models, conversion of Hec 2 models to HEC RAS format, delineation of floodway and flood fringe areas, establishment of minimum floodway limits, encroachment analyses, assessment of downstream impacts, assessment of flood fringe egress and ingress, floodline mapping, public consultation and reporting.

Turtle Creek Floodline Mapping Update
Client: Credit Valley Conservation

Based on the finding of unsteady flow analyses, flood hazards were redefined for the flood susceptible area upstream of the CNR crossing on Turtle Creek. The analyses revealed that flood hazards associated with the storage of water from the regional storm event were a more appropriate definition of the flood hazard limit compared to the original flood hazard defined by 100 year storm peak flows upstream of the railway crossing.

4 PEER REVIEW METHODOLOGY

This section presents our understanding of the project, list of deliverables, and scope of work. The following sections outlines our understanding of the methodology required for a successful peer review. At this time we see no need for any revisions or additions to the proposed scope of work as described in the Terms of Reference.

4.1 METHODOLOGY

Our scope of work has been organized into two phases as suggested in the Terms of Reference as follows:

Phase One

- Ensure consistency with standards and generally accepted approaches (project design);
- Validate the work plan/planned deliverables.

Phase Two

- Ensure consistency with standards and generally accepted approaches (product);
- Ensure scientifically defensible results.

Each phase will address certain aspects of four areas. Each of the four areas of review have key questions to be addressed as outline in the Terms of Reference. The four areas of review are:

1. Statement of Peer Review Work - Lidar, Air photography and DEM Creation
2. Statement of Peer Review Work - RTK GPS Survey
3. Statement of Peer Review Work - Hydrology
4. Statement of Peer Review Work - Hydraulics

Greck and Associates Limited has at its disposal a range of the latest software in hydrology and hydraulics that enables efficient processing of hydrological and hydraulic data. We will use this software to assist in providing an accurate and cost efficient review of technical aspects of the peer review. For example we may use various Geographical Information System (GIS) software to review watershed discretization.

Based on information provided by Kawartha Conservation, the Fenelon Creek hydrological model has a catchment area of approximately 646ha including 14 sub-catchments. The Fenelon Creek hydraulic model is approximately 1.6km in length with 45 cross sections and 7 river crossings. The Omemee hydrological model has not yet been developed. We have assumed that based on estimates provided by Kawartha Conservation the hydrological model will have a catchment area of less than 650ha and include around 10 sub-catchments. The Omemee hydraulic model is less than 1km in length with around 20 cross sections and 1 river crossing.

4.2 DELIVERABLES

The deliverables of this project include a written statement of work to the Peer Review Leader for incorporating into the Peer Review Record. This statement of work will include a detailed overview of our peer review process and comments directed to the Peer Review Leader.

5 PROPOSED SCHEDULE AND MEETINGS

Our proposed work schedule is based on a late January 2016 start. Our proposed schedule indicates that we can complete both phases of the model review within three weeks of receiving all required information. The schedule for each phase of the review is:

1. Phase one review and comments: One week from receiving required information;
2. Phase two review and comments: Two weeks from receiving model files and other relevant information.

6 FEE PROPOSAL

Cost estimates, exclusive of the HST are summarized in Table 1 (Fenelon Creek) and Table 2 (Omemee). Included is the cost for peer review of each major project task, hourly rates and disbursements. Disbursements are charged at cost and include travel mileage, long distance telephone charges, courier fees, printing and photocopying.

The total estimated cost for the Fenelon Creek project site is $3,540 (excluding HST) and the Omemee site $2,750 (excluding HST). These costs include professional time

and disbursements. This amount represents the lump sum or stipulated sum beyond which no additional charges may be levied against the project. Under no circumstances will the project budget be exceeded without written approval from the client. Billings for the project are monthly and due 30 days upon receipt.

No time has been budgeted for a meeting with KRCA staff. Should this be required it will be charged at the billing rates specified for the person participating in the meeting plus expenses.

TABLE 1: Project Cost Fenelon Falls North

Tasks and Services	Professional Time (Hours)		Total Task Time (Hours)	Professional Time Cost	Disbursements	Total Task Cost
	Brian Greck, P. Eng.	Richard Brunton, E.I.T.				
	Project Manager and Senior Engineer	Water Resource Engineer				
	$160	$105				
Phase 1						
Lidar, Air photography and DEM Creation	0.5	1.0	2	$ 185		$ 185
RTK GPS Survey	0.5	1.0	2	$ 185		$ 185
Hydrology	1	2.0	3	$ 370		$ 370
Hydraulics	1	2.0	3	$ 370		$ 370
Phase 2						
Lidar, Air photography and DEM Creation	0.5	1.0	2	$ 185		$ 185
RTK GPS Survey	0.5	1.0	2	$ 185		$ 185
Hydrology	1	5.0	6	$ 685		$ 685
Hydraulics	1	8.0	9	$ 1,000		$ 1,000
Provide review comments and discussion	3	2.0	5	$ 690		$ 690
	9	23	32			
	$1,440	$2,415		$ 3,655	$ 0	
TOTAL						$ 3,855

TABLE 2: Project Cost Omemee

Tasks and Services	Professional Time (Hours)		Total Task Time (Hours)	Professional Time Cost	Disbursements	Total Task Cost
	Brian Greck, P. Eng. Project Manager and Senior	Richard Brunton, E.I.T. Water Resource Engineer				
	$160	$105				
Phase 1						$ 0
Lidar, Air photography and DEM Creation	0.50	1.0	2	$ 185		$ 185
RTK GPS Survey	0.50	1.0	2	$ 185		$ 185
Hydrology	1.00	2.0	3	$ 370		$ 370
Hydraulics	1.00	2.0	3	$ 370		$ 370
Phase 2						
Lidar, Air photography and DEM Creation	0.50	1.0	2	$ 185		$ 185
RTK GPS Survey	0.50	1.0	2	$ 185		$ 185
Hydrology	1.00	2.0	3	$ 370		$ 370
Hydraulics	1.00	2.0	3	$ 370		$ 370
Provide review comments and discussion	2.00	2.0	4	$ 530		$ 530
	8	14	22			
	$1,280	$1,470		$ 2,750	$ 0	
TOTAL						**$ 2,750**

7 APPENDIX

Brian Greck, P. Eng.

PRESIDENT
SENIOR WATER RESOURCES / ENVIRONMENTAL ENGINEER

GRECK AND ASSOCIATES LIMITED
WATER RESOURCES AND ENVIRONMENTAL ENGINEERING

Profile

Mr. Greck established Greck and Associates Limited in 2000. He has over 35 years of experience in water resources, civil and environmental engineering. Mr. Greck provides management and design services in:

- Natural channel design, stabilization, erosion control and watercourse rehabilitation,
- Urban stormwater best management planning, design and retrofit,
- Hydraulic analysis and design of dams, culverts, bridges, weirs, sewers and fishways,
- Erosion and sediment control planning, design and monitoring,
- Hydraulic assessment of infrastructure, combined sewer overflow and flood relief projects
- Watershed hydrology and floodplain hydraulics

Education

- McMaster University – Hamilton, Ontario Bachelor of Engineering (Civil), 1980
- Course on Rivers and Applied Fluvial Geomorphology, David Rosgen, Guelph University, 1992
- Drainage Superintendent Course, Ontario Ministry of Food and Agriculture, 1998

Professional Affiliation

- Professional Engineers of Ontario
- Canadian Water Resources Association

Work Experience

Greck and Associates Limited ***Brampton, Ontario***	President / Senior Water Resources / Environmental Engineer, *2000 to Present*
Aquafor Beach Limited ***Brampton, Ontario***	Partner / Project Manager Water Resources / Environmental Engineer, *1990 to 2000*
Paul Theil Associates ***Brampton, Ontario***	Water Resources Engineer *1986 to 1990*
Ontario Ministry of the Environment ***Toronto, Ontario***	Water Resources / Environmental Engineer *1980 to 1982 and 1984 to 1986*
Environment Canada, National Water Research Institute ***Burlington, Ontario***	Water Resources / Environmental Engineer *1982 to 1984*

Experience Summary Examples

Municipal Infrastructure Assessment, Improvements and Flood Relief
- City of Mississauga, Cooksville Creek Storm Trunk Sewer Replacement Project
- City of Oshawa, Britannia Avenue Bridge and Culvert Crossing Structures Over Oshawa Creek
- City of Mississauga, Balsam Avenue Flood Relief Project.
- City of Oshawa, Wilson Road North and Oshawa Creek Crossing Culvert Design, City of Oshawa.
- Municipality of Halton Hill, 4th line culverts replacements
- York Region, Highway 9 Improvements, Culvert Hydraulics.
- City of Mississauga, Hindhead and Huron Park Drainage Improvements Study Class EA and Detail Design.
- Greater Toronto Airport Groundside Association, parking lot storm sewer system hydraulic analysis
- Highway 34 Improvements Drainage and Hydrology Study.
- Basement flood relief studies for the Cities of Scarborough, York, North York, Windsor, Thunder Bay, and Sarnia.
- Combined sewer studies for the municipalities of Sarnia, Thunder Bay and Toronto.
- Environment Canada, research and experiments on energy losses associated with sewer pipe junctions.

Watershed Hydrologic and Hydraulic Studies
- City of Kawartha Lakes, Ops#1 Drain Flood Hazard Management Guidelines.
- Mason Homes, Flood Hazard Policies Development for Commercial Development.
- Central Lake Ontario Conservation Authority, Corbett Creek Watershed Hydrology and Floodline Mapping.
- Private Clients, Errol Creek, Sawmill Creek and Cow Creek Hydrology and Floodline Mapping.
- Toronto and Region Conservation Authority, Flood Plain Mapping Updates for the upper Humber River, upper Duffins Creek, Etobicoke Creek, and Mimico Creek watersheds.
- City of Oshawa, Northwood Industrial Park Master Stormwater Management Plan.
- Bright's Grove Golf Club, Cow Creek Floodline Mapping.

Natural Channel Design, Channel Stabilization, Watercourse Crossing Structures, Erosion Control Works and Watercourse Rehabilitation Projects
- City of Mississauga, Sheridan Creek Channel Stabilization Project,
- Toronto Region Conservation, Atwood Place Erosion Control Project Toronto, Humber River,
- City of Mississauga, Hindhead Road Culvert Replacement, Turtle Creek
- Region of Peel, Sanitary Sewer Rehabilitation Project, Credit River Restoration
- York Region, Holland Landing Road and Yonge Street Natural Environmental Assessment and Culvert Replacement and Natural Channel Design.
- Infrastructure Protection and Site restoration Projects with Toronto Region Conservation: West Don River, Snelgrove Drain, Albion Creek, and Bradwick Drive.
- Highland Creek Detail Design of Replacement Bank Stabilization and Erosion Control Works, Toronto Region Conservation.
- Toronto Region Conservation, Albion Hills Dam Hydraulic and Fluvial Geomorphology Assessment,.
- Newbrook Creek Bank Erosion Assessment, Toronto Region Conservation.
- Palmer Environmental, Brynelson Creek Yukon Hydrologic and Hydraulic Engineering.

Fish Passage and Barrier Mitigation Projects
- Valleys 2000, Bowmanville Creek, New Goodyear Dam Bypass Channel Fishway.
- Ignatius Jesuit Centre Guelph, Marden Creek dam removal for brook trout habitat restoration.
- Ministry of Natural Resources, Private Dam Owners Guide to Dam Decommissioning.
- Kinto Brook Fishways and White Lake Fish Barrier Migration Design, IOCC, Labrador.

- Agrium Inc., Cargill Lake Pike Habitat and Fishway Design, Kapuskasing, Ontario.
- Ontario Ministry of Natural Resources and Credit Valley Conservation, Credit River Fish Barrier Study.
- Denil fishway designs on the Humber River for Raymore Park and the Toronto Board of Trade Woodbridge, Toronto Region Conservation Authority.

Urban Stormwater Management Water Quality and Quantity Control Planning, Design and Retrofit

- Project Engineer for the preparation and implementation of many stormwater management plans for new urban communities throughout Ontario including the detail design of source control measures and end of pipe Best Management Practices such as quality and quantity control ponds, infiltration and filtration facilities, wetlands, channel stabilization works, and culvert upgrades.
- Municipality of Kawartha Lake, Fenelon Falls Drainage Review and Analysis Study.
- City of Oshawa, Simcoe Street North Stormwater Management Plan Update and SWM Pond Retrofit Study.
- City of Barrie, Drainage and Storm Water Management Guidelines update, Consulting Team Senior Advisor.
- City of Oshawa, Taunton Harmony Corridor Study, Stormwater Management Review.
- City of Oshawa, Goodman Creek Pond Retrofit, Flood Relief and Erosion Control Studies.
- Example projects experience, Markham BMP Demonstration pond retrofit, City of Toronto Bloor West. Village Non Structural Stormwater Management Plan, Terraview Park Restoration and Stormwater BMP Project, MOE MISA Stormwater Management Study protocol, and City of Toronto Wet Weather Flow Study.
- Contribution to urban sewer design and stormwater management documents and guidelines including the AISI "Modern Sewer Design", MOE "Stormwater Management Planning and Design", MOE MISA Protocol for Conducting a Stormwater Control Study".
- Urban Best Management Practices Demonstration Project, Town of Markham, Environment Canada and Ontario Ministry of the Environment.
- City of Toronto Wet Weather Flow Study II, Study Area 2, watershed hydrology.

Environmental Restoration and Water Taking Permit, Studies and Projects

- Massey Creek Regeneration in Terraview Park and Willowfield Gardens Park, City of Scarborough.
- Stormwater wetlands and filtration system.
- Cootes Paradise Wetland Creation and Pike Spawning Habitat, Grindstone Creek, Hamilton. Harbour/Cootes Paradise Wetland Regeneration Project.
- St. Clair Region Conservation Authority, Strathroy Reservoir Management Study and Class EA.
- Conservation Halton, Upper Grindstone Creek Rehabilitation Study.
- Private landowner, Jancal dam, hydraulic analysis of bottom draw facilities.
- Small Dam Decommission Manual for Private Landowners, Ontario Ministry of Natural Resources .

Township of Mariposa, Drainage Superintendent

- Provide services for the maintenance of drains as required under the Drainage Act of Ontario.

Expert Testimony

- Public Hearings to obtain a Certificate of Approval under the Water Resources Act.
- Expert testimony In Provincial Court on erosion and sediment control planning.
- Tribunal Hearing under the Drainage Act of Ontario.
- Expert Testimony In Provincial Ontario Municipal Board Hearings.

Municipal Design Projects

- Church Down Gardens Stormwater Management Pond Assumption and Retrofit.
- Woods of Jennings Creek Subdivision Design, servicing, grading, SWM, Kawartha Lakes.

Richard Brunton.

WATER RESOURCES ENGINEER

GRECK AND ASSOCIATES LIMITED
WATER RESOURCES AND ENVIRONMENTAL ENGINEERING

Profile

Mr. Brunton is a water resources engineer who has gained 6 years of experience working in the consulting sector of water resources engineering. Richard began working for Greck and Associates Limited in 2015. Prior to this he has gained experience in water resource engineering within New Zealand focusing predominately on hydrology, 1D and 2D hydraulics and stormwater infrastructure design. Mr. Brunton provides technical and design services in:

- Hydrological and hydraulic analysis for the purpose of 1D and 2D flood line mapping for Conservation Authorities, Municipalities and private development;
- Hydrological watershed assessments for the purpose of floodplain mapping and management and stormwater design;
- Natural channel design, erosion control and watercourse ecological rehabilitation,
- Urban stormwater infrastructure planning and design;
- Hydraulic analysis and design of SWM ponds, culverts, inlet/outlet structures and weirs and;
- Erosion and sediment control planning, design and monitoring.

Education

University of Canterbury – Christchurch, New Zealand

- Bachelor of Engineering (Natural Resources) 1st Class Honours, 2009

Work Experience

Greck and Associates Limited — Water Resources Engineer (E.I.T.)
Brampton, Ontario — *2015 to Present*

Mr. Brunton has recently relocated to Ontario from New Zealand to join Greck and Associates Limited. His role is as a water resources engineer and works predominantly in the fields of hydrology, channel hydraulics, channel restoration and floodline mapping.

Pattle Delamore Partners Limited — Civil/Water Resources Engineer
Christchurch, New Zealand — *2009 to 2014*

Mr. Brunton worked for approximately 5 years at PDP as a civil/water resource engineer undertaking predominately hydrology, hydraulic and urban stormwater infrastructure design. He has experience in developing complex 1D and 2D coupled hydraulic models using a range of software including the MIKE and HEC packages. He was also responsible for undertaking a number of combined restoration and urban flooding projects.

Mr. Brunton was also a co-op student for three summers and was contracted after graduation. This experience included working within a local authority council, sewer construction and engineering consultancies.

Technical Training

- Visual Otthymo
- HEC-RAS and HEC-HMS
- MIKE Urban, MIKE11, MIKE 21 and MIKE Flood
- GIS (ArcMap, Saga, Quantum)
- Matlab and Visual Basic
- Microsoft Word, Microsoft Excel

Experience Summary Examples

Watershed Hydraulics and Floodplain Studies

- TRCA, Brookbanks Park Channel Restoration: Regulatory floodplain mapping for Deerlick Creek, Ontario.
- Time Development Group, Wilson Avenue Flood Hazard Assessment, Toronto. Work involved detailed hydrological (Visual Otthymo) and hydraulic assessment (HEC-Ras) to demine flood hazard levels for proposed development.
- City of Oshawa, Stormwater Management Study Northwood Industrial Park: Hydrological (Visual Otthymo) and hydraulic (HEC-Ras) assessment in to develop best management practices for future industrial development related to flood hazard management;
- Christchurch City Council, Heathcote and Avoca Watersheds Urban Flood Mapping Study: Coupled 1D – 2D flood model using MIKE software of existing and future flood conditions and conceptual flood protection design for a proposed 300 ha urban development. The project area included both existing and future urban and rural floodplain areas. The modeling involved preprocessing of LiDAR data, assessing the interaction between hydrology, low flow drainage system, riverine flooding, 2D overland flow and tidal variations;
- Silverstream Estates Limited, Flood Hazard and Floor Levels Assessment: Coupled 1D – 2D flood model in MIKE to assess filling effects and floor level planning for a large (>1000 lots) residential subdivision. Components of the model included assessing riverine flooding, stop bank break out scenarios, urban hydrology, stormwater system flow, overland flow and tidal variations;
- Christchurch City Council, Wairarapa Stream Capacity Assessment. Channel capacity model using MIKE11 developed to assist in the bankfull and flood conveyance capacity assessment of a high profile urban stream network. The capacity assessment and subsequent floodplain mapping was used to form part of a wider study that lead to restoration and flood protection design;
- Ravenswood Developments Ltd, Floor Level Mapping for Proposed Residential Subdivision: 2D floodplain mapping for large commercial and residential subdivision. Project involved using 2D TUFLOW flood mapping software to calculate floor levels and concept design of flood protection options;
- Whangarei District Council, Whangarei Floodplain Modelling: Assessment of stormwater system capacity and identification of overland flow paths using MIKE Urban;

- Wellington Regional Council, Huia Pipeline Flushing: Capacity assessment using MIKE Urban of a critical sewer pipeline to determine flushing volumes, velocities and surcharging manhole locations.

Watershed Hydrology Studies

- Calder Stewart Limited, Industrial Development Hydrology Study. Hydrology assessment for a 100 ha industrial development. Work involved catchment delineation, watershed modelling, flow route modeling in Mike Urban and conceptual stormwater pond design;
- Hurunui Water Project, Irrigation Feasibility Study: Complex hydrology study for a proposed 60,000 ha irrigation scheme within New Zealand. Responsible for riverine hydrology assessment including watershed characterisation, river flow regression analysis, flood frequency analysis and transposing watershed hydrology;
- Selwyn District Council, Rainfall and Runoff Standardisation Report: Detailed hydrology study to assist local municipality in developing standardised modelling parameters for future development assessment;
- Christchurch City Council, Stormwater Hydrological Study: Detailed hydrological study investigating long term rainfall data and treatment performance of various City stormwater management facilities.

Natural Channel Design, Channel Stabilization, Watercourse Crossing Structures, Erosion Control Works and Watercourse Rehabilitation Projects

- TRCA, Bercy (Wycliff) Park Sewer Protection Study: Conceptual design of sewer protection works within the Municipality of York, Ontario;
- TRCA, Brookbanks Park Channel Restoration: Conceptual design of channel restoration and floodplain mapping for the Deerlick Creek, Ontario.
- Christchurch City Council, Wai-iti Stream Earthquake Rehabilitation: Rehabilitation and erosion protection conceptual and detailed design for high profile urban stream network;

Urban Stormwater Management and Design

- Silverstream Estates Limited, Storm Sewer Design, Detailed design and hydrological and hydraulic 1D modeling using MIKE Urban of a large residential subdivision storm sewer and multiple SWM ponds and outlet structures;
- Southern Institute of Technology Ltd, Stormwater conveyance and disposal. Detailed design and hydrological and hydraulic 1D modeling of educational facility stormwater system;
- Preston Downs Developments, Hydrology Investigation: Hydrological assessment for proposed residential subdivision and conceptual stormwater management design;
- Ravenswood Developments Ltd, Stormwater Management Design: Stormwater piped network design and SWM facilities for large residential subdivision.
- Hurunui District Council, Amberley flood mitigation: Conceptual and detailed design of flood mitigation works in rural watershed including culvert upgrades, channel widening and weir design.

Appendix C
Rainfall Data

Rainfall Distribution Table - Timmins

Time (minute)	Rainfall Intensity (mm/hr)
0	15
60	20
120	10
180	3
240	5
300	20
360	43
420	20
480	23
540	13
600	13
660	8
720	0

Rainfall Distribution Table - 100y 24h Chicago

Time (minute)	Rainfall Intensity (mm/hr)
0	0.523
10	0.532
20	0.542
30	0.552
40	0.562
50	0.573
60	0.585
70	0.596
80	0.609
90	0.622
100	0.635
110	0.649
120	0.664
130	0.679
140	0.695
150	0.712
160	0.73
170	0.749
180	0.77
190	0.791
200	0.813
210	0.837
220	0.863
230	0.89
240	0.919
250	0.95
260	0.983
270	1.019
280	1.058
290	1.1
300	1.146
310	1.196
320	1.25
330	1.311
340	1.377
350	1.451
360	1.534
370	1.628
380	1.733
390	1.855
400	1.995
410	2.159
420	2.353
430	2.587
440	2.873

Rainfall Distribution Table - 100y 24h Chicago

450	3.231
460	3.692
470	4.305
480	5.157
490	6.416
500	8.436
510	12.119
520	20.489
530	51.447
540	157.288
550	62.45
560	31.096
570	19.701
580	14.089
590	10.835
600	8.743
610	7.3
620	6.251
630	5.458
640	4.84
650	4.345
660	3.941
670	3.605
680	3.322
690	3.08
700	2.871
710	2.689
720	2.529
730	2.387
740	2.26
750	2.147
760	2.044
770	1.952
780	1.867
790	1.79
800	1.719
810	1.653
820	1.593
830	1.537
840	1.485
850	1.436
860	1.391
870	1.348
880	1.308
890	1.271
900	1.236
910	1.202

Rainfall Distribution Table - 100y 24h Chicago

920	1.171
930	1.141
940	1.113
950	1.086
960	1.061
970	1.036
980	1.013
990	0.991
1000	0.97
1010	0.95
1020	0.93
1030	0.912
1040	0.894
1050	0.877
1060	0.861
1070	0.845
1080	0.83
1090	0.816
1100	0.802
1110	0.788
1120	0.775
1130	0.762
1140	0.75
1150	0.738
1160	0.727
1170	0.716
1180	0.705
1190	0.695
1200	0.685
1210	0.675
1220	0.666
1230	0.656
1240	0.648
1250	0.639
1260	0.631
1270	0.622
1280	0.614
1290	0.607
1300	0.599
1310	0.592
1320	0.585
1330	0.578
1340	0.571
1350	0.564
1360	0.558
1370	0.551
1380	0.545

Rainfall Distribution Table - 100y 24h Chicago

1390	0.539
1400	0.533
1410	0.528
1420	0.522
1430	0.516

Rainfall Distribution Table - 50y 24h Chicago

Time (minute)	Rainfall Intensity (mm/hr)
0	0.521
10	0.53
20	0.539
30	0.549
40	0.559
50	0.57
60	0.581
70	0.592
80	0.604
90	0.616
100	0.629
110	0.643
120	0.657
130	0.672
140	0.688
150	0.704
160	0.721
170	0.74
180	0.759
190	0.779
200	0.801
210	0.824
220	0.848
230	0.874
240	0.902
250	0.931
260	0.963
270	0.997
280	1.034
290	1.074
300	1.117
310	1.164
320	1.215
330	1.272
340	1.334
350	1.404
360	1.481
370	1.568
380	1.666
390	1.778
400	1.908
410	2.059
420	2.237
430	2.45
440	2.71

Rainfall Distribution Table - 50y 24h Chicago

450	3.034
460	3.448
470	3.996
480	4.754
490	5.865
500	7.636
510	10.844
520	18.103
530	45.301
540	143.342
550	55.042
560	27.323
570	17.419
580	12.554
590	9.728
600	7.905
610	6.642
620	5.721
630	5.021
640	4.473
650	4.032
660	3.671
670	3.37
680	3.115
690	2.897
700	2.708
710	2.543
720	2.397
730	2.267
740	2.152
750	2.047
760	1.953
770	1.868
780	1.79
790	1.718
800	1.652
810	1.592
820	1.536
830	1.483
840	1.435
850	1.389
860	1.347
870	1.307
880	1.27
890	1.235
900	1.202
910	1.17

Rainfall Distribution Table - 50y 24h Chicago

920	1.14
930	1.112
940	1.086
950	1.06
960	1.036
970	1.013
980	0.991
990	0.97
1000	0.95
1010	0.931
1020	0.913
1030	0.895
1040	0.878
1050	0.862
1060	0.846
1070	0.831
1080	0.817
1090	0.803
1100	0.789
1110	0.777
1120	0.764
1130	0.752
1140	0.74
1150	0.729
1160	0.718
1170	0.707
1180	0.697
1190	0.687
1200	0.678
1210	0.668
1220	0.659
1230	0.65
1240	0.642
1250	0.633
1260	0.625
1270	0.617
1280	0.609
1290	0.602
1300	0.595
1310	0.588
1320	0.581
1330	0.574
1340	0.567
1350	0.561
1360	0.555
1370	0.549
1380	0.543

Rainfall Distribution Table - 50y 24h Chicago

1390	0.537
1400	0.531
1410	0.525
1420	0.52
1430	0.515

Rainfall Distribution Table - 25y 24h Chicago

Time (minute)	Rainfall Intensity (mm/hr)
0	0.461
10	0.469
20	0.478
30	0.486
40	0.495
50	0.504
60	0.514
70	0.524
80	0.535
90	0.546
100	0.557
110	0.569
120	0.582
130	0.595
140	0.609
150	0.624
160	0.639
170	0.655
180	0.672
190	0.69
200	0.709
210	0.729
220	0.751
230	0.774
240	0.799
250	0.825
260	0.853
270	0.883
280	0.916
290	0.951
300	0.989
310	1.031
320	1.076
330	1.126
340	1.182
350	1.243
360	1.311
370	1.388
380	1.475
390	1.575
400	1.689
410	1.823
420	1.98
430	2.169
440	2.399

Rainfall Distribution Table - 25y 24h Chicago

450	2.686
460	3.053
470	3.538
480	4.209
490	5.192
500	6.761
510	9.605
520	16.06
530	40.452
540	130.089
550	49.22
560	24.287
570	15.449
580	11.123
590	8.615
600	6.999
610	5.881
620	5.064
630	4.445
640	3.96
650	3.57
660	3.25
670	2.984
680	2.758
690	2.565
700	2.398
710	2.251
720	2.122
730	2.008
740	1.905
750	1.813
760	1.73
770	1.654
780	1.585
790	1.522
800	1.463
810	1.41
820	1.36
830	1.314
840	1.271
850	1.23
860	1.193
870	1.158
880	1.125
890	1.094
900	1.064
910	1.036

Rainfall Distribution Table - 25y 24h Chicago

920	1.01
930	0.985
940	0.961
950	0.939
960	0.918
970	0.897
980	0.878
990	0.859
1000	0.842
1010	0.825
1020	0.808
1030	0.793
1040	0.778
1050	0.763
1060	0.75
1070	0.736
1080	0.724
1090	0.711
1100	0.699
1110	0.688
1120	0.677
1130	0.666
1140	0.656
1150	0.646
1160	0.636
1170	0.627
1180	0.617
1190	0.609
1200	0.6
1210	0.592
1220	0.584
1230	0.576
1240	0.568
1250	0.561
1260	0.554
1270	0.547
1280	0.54
1290	0.533
1300	0.527
1310	0.52
1320	0.514
1330	0.508
1340	0.502
1350	0.497
1360	0.491
1370	0.486
1380	0.48

Rainfall Distribution Table - 25y 24h Chicago

1390	0.475
1400	0.47
1410	0.465
1420	0.46
1430	0.456

Rainfall Distribution Table - 10y 24h Chicago

Time (minute)	Rainfall Intensity (mm/hr)
0	0.433
10	0.44
20	0.448
30	0.455
40	0.464
50	0.472
60	0.481
70	0.49
80	0.5
90	0.51
100	0.52
110	0.531
120	0.543
130	0.554
140	0.567
150	0.58
160	0.594
170	0.609
180	0.624
190	0.64
200	0.658
210	0.676
220	0.695
230	0.716
240	0.738
250	0.761
260	0.786
270	0.813
280	0.842
290	0.873
300	0.907
310	0.944
320	0.985
330	1.029
340	1.077
350	1.131
360	1.191
370	1.258
380	1.334
390	1.421
400	1.52
410	1.635
420	1.77
430	1.932
440	2.127

Rainfall Distribution Table - 10y 24h Chicago

450	2.37
460	2.679
470	3.084
480	3.641
490	4.451
500	5.731
510	8.034
520	13.233
530	33.236
540	112.803
550	40.503
560	19.88
570	12.741
580	9.259
590	7.235
600	5.925
610	5.014
620	4.346
630	3.836
640	3.435
650	3.111
660	2.844
670	2.621
680	2.431
690	2.268
700	2.126
710	2.002
720	1.892
730	1.794
740	1.706
750	1.627
760	1.555
770	1.489
780	1.429
790	1.375
800	1.324
810	1.277
820	1.234
830	1.193
840	1.156
850	1.12
860	1.087
870	1.056
880	1.027
890	1
900	0.974
910	0.949

Rainfall Distribution Table - 10y 24h Chicago

920	0.926
930	0.904
940	0.883
950	0.863
960	0.844
970	0.826
980	0.808
990	0.792
1000	0.776
1010	0.761
1020	0.746
1030	0.732
1040	0.719
1050	0.706
1060	0.694
1070	0.682
1080	0.67
1090	0.659
1100	0.648
1110	0.638
1120	0.628
1130	0.618
1140	0.609
1150	0.6
1160	0.591
1170	0.583
1180	0.575
1190	0.567
1200	0.559
1210	0.551
1220	0.544
1230	0.537
1240	0.53
1250	0.523
1260	0.517
1270	0.51
1280	0.504
1290	0.498
1300	0.492
1310	0.486
1320	0.481
1330	0.475
1340	0.47
1350	0.465
1360	0.46
1370	0.455
1380	0.45

Rainfall Distribution Table - 10y 24h Chicago

1390	0.445
1400	0.441
1410	0.436
1420	0.432
1430	0.427

Rainfall Distribution Table - 5y 24h Chicago

Time (minute)	Rainfall Intensity (mm/hr)
0	0.409
10	0.416
20	0.423
30	0.43
40	0.438
50	0.446
60	0.454
70	0.463
80	0.471
90	0.481
100	0.49
110	0.5
120	0.511
130	0.522
140	0.533
150	0.545
160	0.558
170	0.572
180	0.586
190	0.601
200	0.616
210	0.633
220	0.651
230	0.669
240	0.69
250	0.711
260	0.734
270	0.758
280	0.785
290	0.813
300	0.844
310	0.877
320	0.914
330	0.954
340	0.998
350	1.046
360	1.1
370	1.16
380	1.228
390	1.305
400	1.393
410	1.495
420	1.614
430	1.756
440	1.928

Rainfall Distribution Table - 5y 24h Chicago

450	2.14
460	2.408
470	2.758
480	3.236
490	3.927
500	5.01
510	6.943
520	11.279
530	28.163
540	100.257
550	34.347
560	16.826
570	10.869
580	7.966
590	6.274
600	5.174
610	4.405
620	3.838
630	3.403
640	3.06
650	2.781
660	2.551
670	2.358
680	2.193
690	2.051
700	1.927
710	1.818
720	1.721
730	1.635
740	1.557
750	1.487
760	1.424
770	1.366
780	1.312
790	1.263
800	1.218
810	1.176
820	1.138
830	1.101
840	1.068
850	1.036
860	1.006
870	0.979
880	0.952
890	0.927
900	0.904
910	0.882

Rainfall Distribution Table - 5y 24h Chicago

920	0.861
930	0.841
940	0.822
950	0.804
960	0.786
970	0.77
980	0.754
990	0.739
1000	0.725
1010	0.711
1020	0.698
1030	0.685
1040	0.673
1050	0.661
1060	0.65
1070	0.639
1080	0.628
1090	0.618
1100	0.608
1110	0.599
1120	0.59
1130	0.581
1140	0.572
1150	0.564
1160	0.556
1170	0.548
1180	0.54
1190	0.533
1200	0.526
1210	0.519
1220	0.512
1230	0.506
1240	0.499
1250	0.493
1260	0.487
1270	0.481
1280	0.475
1290	0.47
1300	0.464
1310	0.459
1320	0.454
1330	0.449
1340	0.444
1350	0.439
1360	0.435
1370	0.43
1380	0.425

Rainfall Distribution Table - 5y 24h Chicago

1390	0.421
1400	0.417
1410	0.413
1420	0.408
1430	0.404

Rainfall Distribution Table - 2y 24h Chicago

Time (minute)	Rainfall Intensity (mm/hr)
0	0.399
10	0.405
20	0.412
30	0.419
40	0.426
50	0.433
60	0.441
70	0.449
80	0.457
90	0.465
100	0.474
110	0.484
120	0.493
130	0.503
140	0.514
150	0.525
160	0.537
170	0.549
180	0.562
190	0.576
200	0.59
210	0.606
220	0.622
230	0.639
240	0.657
250	0.676
260	0.697
270	0.719
280	0.743
290	0.768
300	0.796
310	0.826
320	0.858
330	0.894
340	0.933
350	0.975
360	1.023
370	1.075
380	1.134
390	1.201
400	1.277
410	1.365
420	1.466
430	1.587
440	1.731

Rainfall Distribution Table - 2y 24h Chicago

450	1.907
460	2.128
470	2.414
480	2.798
490	3.345
500	4.187
510	5.66
520	8.896
530	21.598
540	84.388
550	26.303
560	13.004
570	8.593
580	6.431
590	5.155
600	4.314
610	3.719
620	3.275
630	2.931
640	2.657
650	2.432
660	2.246
670	2.087
680	1.951
690	1.833
700	1.73
710	1.638
720	1.557
730	1.484
740	1.418
750	1.358
760	1.304
770	1.254
780	1.208
790	1.165
800	1.126
810	1.09
820	1.056
830	1.024
840	0.994
850	0.966
860	0.94
870	0.916
880	0.892
890	0.87
900	0.85
910	0.83

Rainfall Distribution Table - 2y 24h Chicago

920	0.811
930	0.793
940	0.776
950	0.76
960	0.744
970	0.73
980	0.715
990	0.702
1000	0.689
1010	0.676
1020	0.664
1030	0.653
1040	0.642
1050	0.631
1060	0.621
1070	0.611
1080	0.601
1090	0.592
1100	0.583
1110	0.574
1120	0.566
1130	0.558
1140	0.55
1150	0.542
1160	0.535
1170	0.527
1180	0.521
1190	0.514
1200	0.507
1210	0.501
1220	0.495
1230	0.489
1240	0.483
1250	0.477
1260	0.471
1270	0.466
1280	0.461
1290	0.455
1300	0.45
1310	0.445
1320	0.441
1330	0.436
1340	0.431
1350	0.427
1360	0.423
1370	0.418
1380	0.414

Rainfall Distribution Table - 2y 24h Chicago

1390	0.41
1400	0.406
1410	0.402
1420	0.398
1430	0.394

Rainfall Distribution Table - 100y 24h AES

Time (minute)	Rainfall Intensity (mm/hr)
0	0
120	0.491
240	1.472
360	3.926
480	7.362
600	13.742
720	7.362
840	5.89
960	3.926
1080	2.454
1200	1.472
1320	0.491
1440	0.491

Rainfall Distribution Table - 100y 12h AES

Time (minute)	Rainfall Intensity (mm/hr)
0	0
60	0.898
120	2.693
180	7.181
240	13.464
300	25.133
360	13.464
420	10.771
480	7.181
540	4.488
600	2.693
660	0.898
720	0.898

Rainfall Distribution Table - 100y 6h AES

Time (minute)	Rainfall Intensity (mm/hr)
0	0
30	1.628
60	4.885
90	13.027
120	24.426
150	45.595
180	24.426
210	19.541
240	13.027
270	8.142
300	4.885
330	1.628
360	1.628

Rainfall Distribution Table - 100y 24h SCS

Time (minute)	Rainfall Intensity (mm/hr)
0	0
15	1.08
30	1.08
45	1.08
60	1.08
75	1.08
90	1.08
105	1.08
120	1.08
135	1.277
150	1.277
165	1.277
180	1.277
195	1.277
210	1.277
225	1.277
240	1.277
255	1.571
270	1.571
285	1.571
300	1.571
315	1.571
330	1.571
345	1.571
360	1.571
375	1.768
390	1.768
405	1.768
420	1.768
435	2.16
450	2.16
465	2.16
480	2.16
495	2.553
510	2.553
525	2.75
540	2.75
555	3.142
570	3.142
585	3.535
600	3.535
615	4.517
630	4.517
645	6.088
660	6.088

Rainfall Distribution Table - 100y 24h SCS

675	9.427
690	9.427
705	29.067
720	120.197
735	14.141
750	14.141
765	7.267
780	7.267
795	5.303
810	5.303
825	4.124
840	4.124
855	2.946
870	2.946
885	2.946
900	2.946
915	2.946
930	2.946
945	2.946
960	2.946
975	1.768
990	1.768
1005	1.768
1020	1.768
1035	1.768
1050	1.768
1065	1.768
1080	1.768
1095	1.768
1110	1.768
1125	1.768
1140	1.768
1155	1.768
1170	1.768
1185	1.768
1200	1.768
1215	1.178
1230	1.178
1245	1.178
1260	1.178
1275	1.178
1290	1.178
1305	1.178
1320	1.178
1335	1.178
1350	1.178
1365	1.178

Rainfall Distribution Table - 100y 24h SCS

1380	1.178
1395	1.178
1410	1.178
1425	1.178
1440	1.178

Rainfall Distribution Table - 100y 12h SCS

Time (minute)	Rainfall Intensity (mm/hr)
0	0
15	2.244
30	2.244
45	2.244
60	2.244
75	2.244
90	2.244
105	2.244
120	2.244
135	2.693
150	2.693
165	2.693
180	2.693
195	3.591
210	3.591
225	3.591
240	3.591
255	5.386
270	5.386
285	7.182
300	7.182
315	10.772
330	10.772
345	43.09
360	118.496
375	16.159
390	16.159
405	7.182
420	7.182
435	5.386
450	5.386
465	5.386
480	5.386
495	3.142
510	3.142
525	3.142
540	3.142
555	3.142
570	3.142
585	3.142
600	3.142
615	1.795
630	1.795
645	1.795
660	1.795

Rainfall Distribution Table - 100y 12h SCS

675	1.795
690	1.795
705	1.795
720	1.795

Rainfall Distribution Table - 100y 6h SCS

Time (minute)	Rainfall Intensity (mm/hr)
0	0
15	3.257
30	3.257
45	4.885
60	4.885
75	4.885
90	4.885
105	8.142
120	8.142
135	9.77
150	9.77
165	48.852
180	127.015
195	17.912
210	17.912
225	8.142
240	8.142
255	6.514
270	6.514
285	4.885
300	4.885
315	3.257
330	3.257
345	3.257
360	3.257

Rainfall Distribution Table - 100y 12h Chicago

Time (minute)	Rainfall Intensity (mm/hr)
0	1.058
10	1.1
20	1.146
30	1.196
40	1.25
50	1.311
60	1.377
70	1.451
80	1.534
90	1.628
100	1.733
110	1.855
120	1.995
130	2.159
140	2.353
150	2.587
160	2.873
170	3.231
180	3.692
190	4.305
200	5.157
210	6.416
220	8.436
230	12.119
240	20.489
250	51.447
260	157.288
270	62.45
280	31.096
290	19.701
300	14.089
310	10.835
320	8.743
330	7.3
340	6.251
350	5.458
360	4.84
370	4.345
380	3.941
390	3.605
400	3.322
410	3.08
420	2.871
430	2.689
440	2.529

Rainfall Distribution Table - 100y 12h Chicago

450	2.387
460	2.26
470	2.147
480	2.044
490	1.952
500	1.867
510	1.79
520	1.719
530	1.653
540	1.593
550	1.537
560	1.485
570	1.436
580	1.391
590	1.348
600	1.308
610	1.271
620	1.236
630	1.202
640	1.171
650	1.141
660	1.113
670	1.086
680	1.061
690	1.036
700	1.013
710	0.991

Rainfall Distribution Table - 100y 6h Chicago

Time (minute)	Rainfall Intensity (mm/hr)
0	2.159
10	2.353
20	2.587
30	2.873
40	3.231
50	3.692
60	4.305
70	5.157
80	6.416
90	8.436
100	12.119
110	20.489
120	51.447
130	157.288
140	62.45
150	31.096
160	19.701
170	14.089
180	10.835
190	8.743
200	7.3
210	6.251
220	5.458
230	4.84
240	4.345
250	3.941
260	3.605
270	3.322
280	3.08
290	2.871
300	2.689
310	2.529
320	2.387
330	2.26
340	2.147
350	2.044

Appendix D
Subcatchment Map

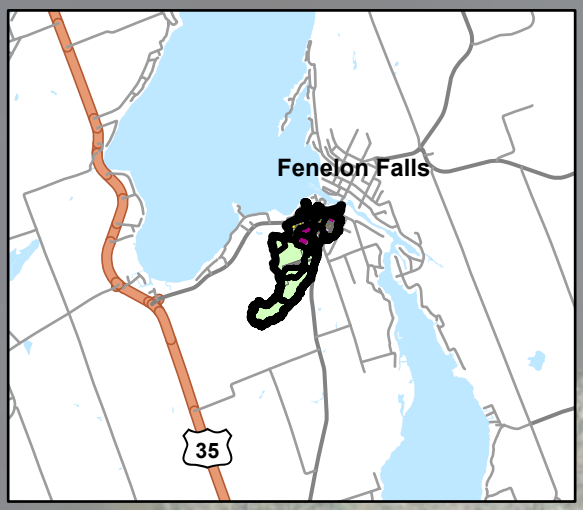

1000 1100 1101 1200 1201 1300 1400 1500 1600 1700 1800 1801 1802 1902 2200 2202 2205 2207 2300 2201 2203 2206 2204 2400 1601 1501 1701 1001 2401 2500 2501 2600 2601 2700 2701 2800 2900

Land Use

- Agriculture
- Commercial
- Insitutional
- Low Density Residential
- Medium Density Residential
- Industrial
- Environmental Constraint
- Woods
- Meadow
- Open Water
- Parks and Open Space

Fenelon Falls South
Land Use

0 40 80 160 240 320
Meters

1:10,000

N

Fenelon Falls Watershed
Subcatchments

Road Classification

- Highway
- County Road
- Local Street

KAWARTHA CONSERVATION

City of KAWARTHA LAKES

This map is for information purposes only and the Kawartha Conservation takes no responsibility for, nor guarantees, the accuracy of the information contained within the map. Prepared by Kawartha Conservation: April 2023. Produced using information provided by the Ministry of Natural Resources, Kawartha Conservation and other municipal sources. Copyright (c) Queen's Printer, 2023.

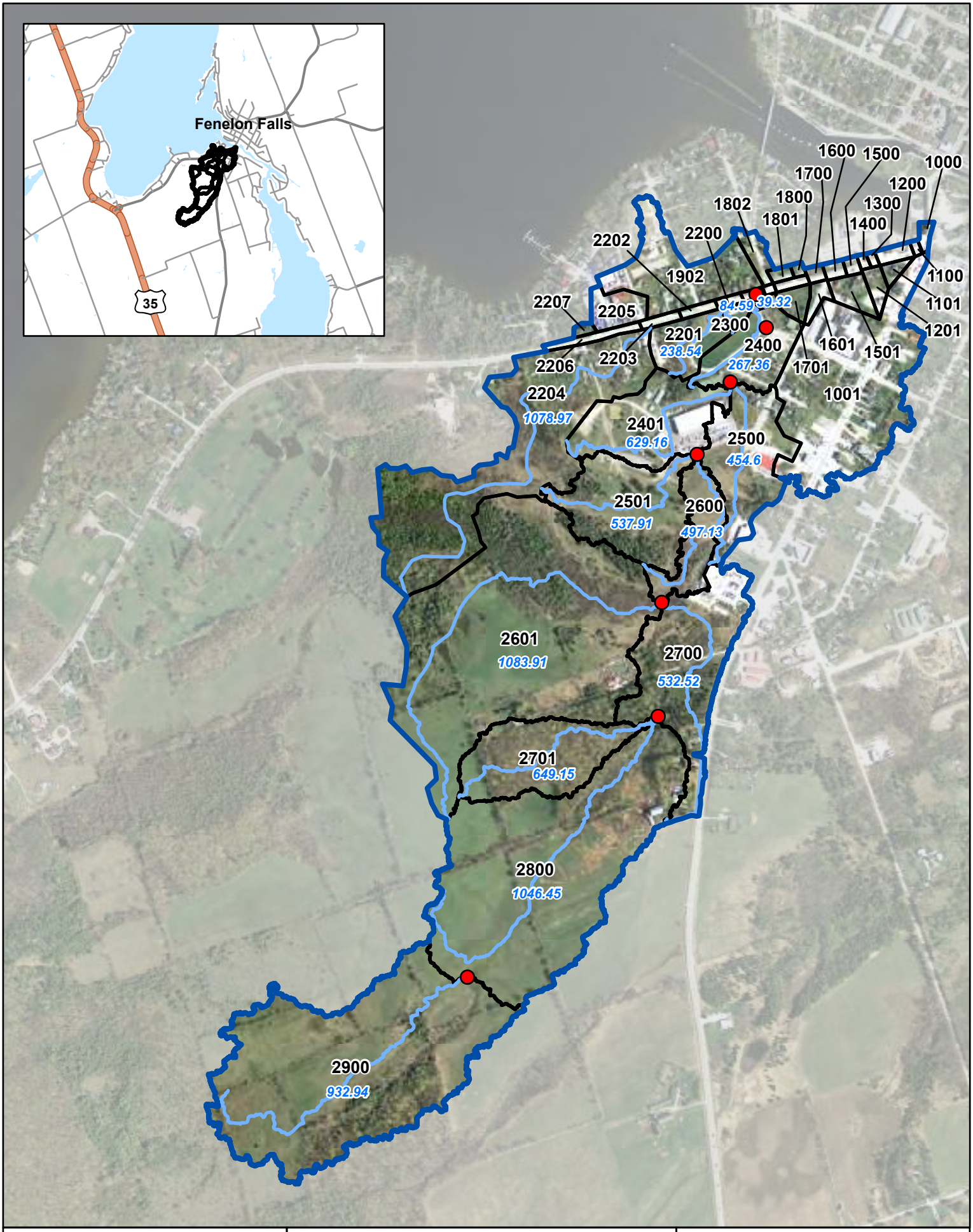

Fenelon Falls South
Longest Flowpath

0 40 80 160 240 320
Meters

1:10,000

N

Fenelon Falls Watershed
Subcatchments
Hydrology Nodes
Longest Flowpath
932.94 Flow Length

Road Classification
Highway
County Road
Local Street

KAWARTHA CONSERVATION

City of KAWARTHA LAKES

This map is for information purposes only and the Kawartha Conservation takes no responsibility for, nor guarantees, the accuracy of the information contained within the map. Prepared by Kawartha Conservation: April 2023. Produced using information provided by the Ministry of Natural Resources, Kawartha Conservation and other municipal sources. Copyright (c) Queen's Printer, 2023.

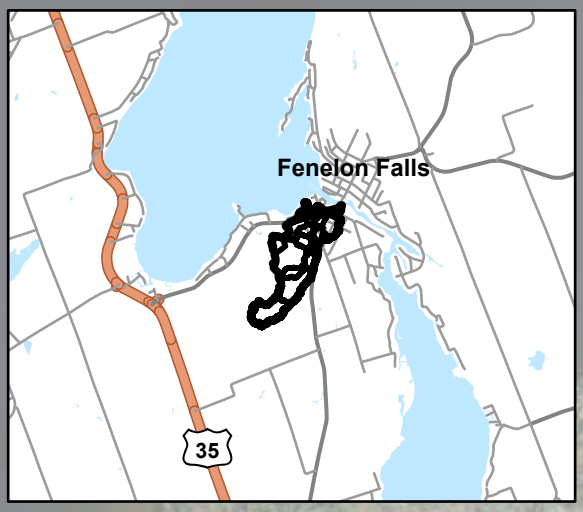

1600 1500 1000 1700 1200 1800 1300 1802 1400 1801 2200 2202 1902 1100 2207 2205 1101 2300 2201 1201 2400 1601 2203 1501 2206 1701 2204 1001 2401 2500 2501 2600 2601 2700 2701 2800 2900

Fenelon Falls South
Soil Type

0 40 80 160 240 320
Meters

1:10,000

N

Fenelon Falls Watershed
Subcatchments

Road Classification
Highway
County Road
Local Street

KAWARTHA CONSERVATION

City of KAWARTHA LAKES

This map is for information purposes only and the Kawartha Conservation takes no responsibility for, nor guarantees, the accuracy of the information contained within the map. Prepared by Kawartha Conservation: April 2023. Produced using information provided by the Ministry of Natural Resources, Kawartha Conservation and other municipal sources. Copyright (c) Queen's Printer, 2023.

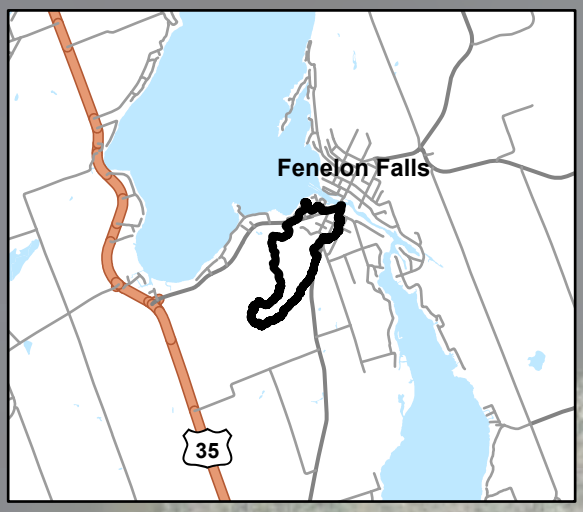

Fenelon Falls South Watershed

0 40 80 160 240 320
Meters

1:10,000

N

Fenelon Falls Watershed

Road Classification

Local Street

Highway

County Road

KAWARTHA CONSERVATION

City of KAWARTHA LAKES

This map is for information purposes only and the Kawartha Conservation takes no responsibility for, nor guarantees, the accuracy of the information contained within the map. Prepared by Kawartha Conservation: April 2023. Produced using information provided by the Ministry of Natural Resources, Kawartha Conservation and other municipal sources. Copyright (c) Queen's Printer, 2023.

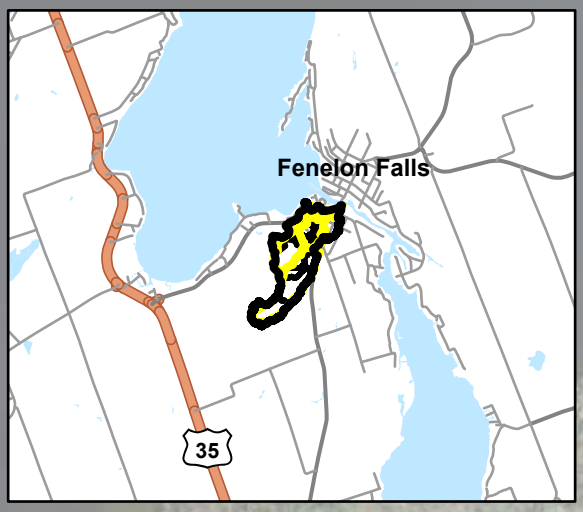

Fenelon Falls South
Subcatchment Comparison

0 40 80 160 240 320
Meters

1:10,000

N

Fenelon Falls Watershed
Subcatchments
Drainage Area - 2010

Road Classification
Highway
County Road
Local Street

KAWARTHA CONSERVATION

City of KAWARTHA LAKES

This map is for information purposes only and the Kawartha Conservation takes no responsibility for, nor guarantees, the accuracy of the information contained within the map. Prepared by Kawartha Conservation: April 2023. Produced using information provided by the Ministry of Natural Resources, Kawartha Conservation and other municipal sources. Copyright (c) Queen's Printer, 2023.

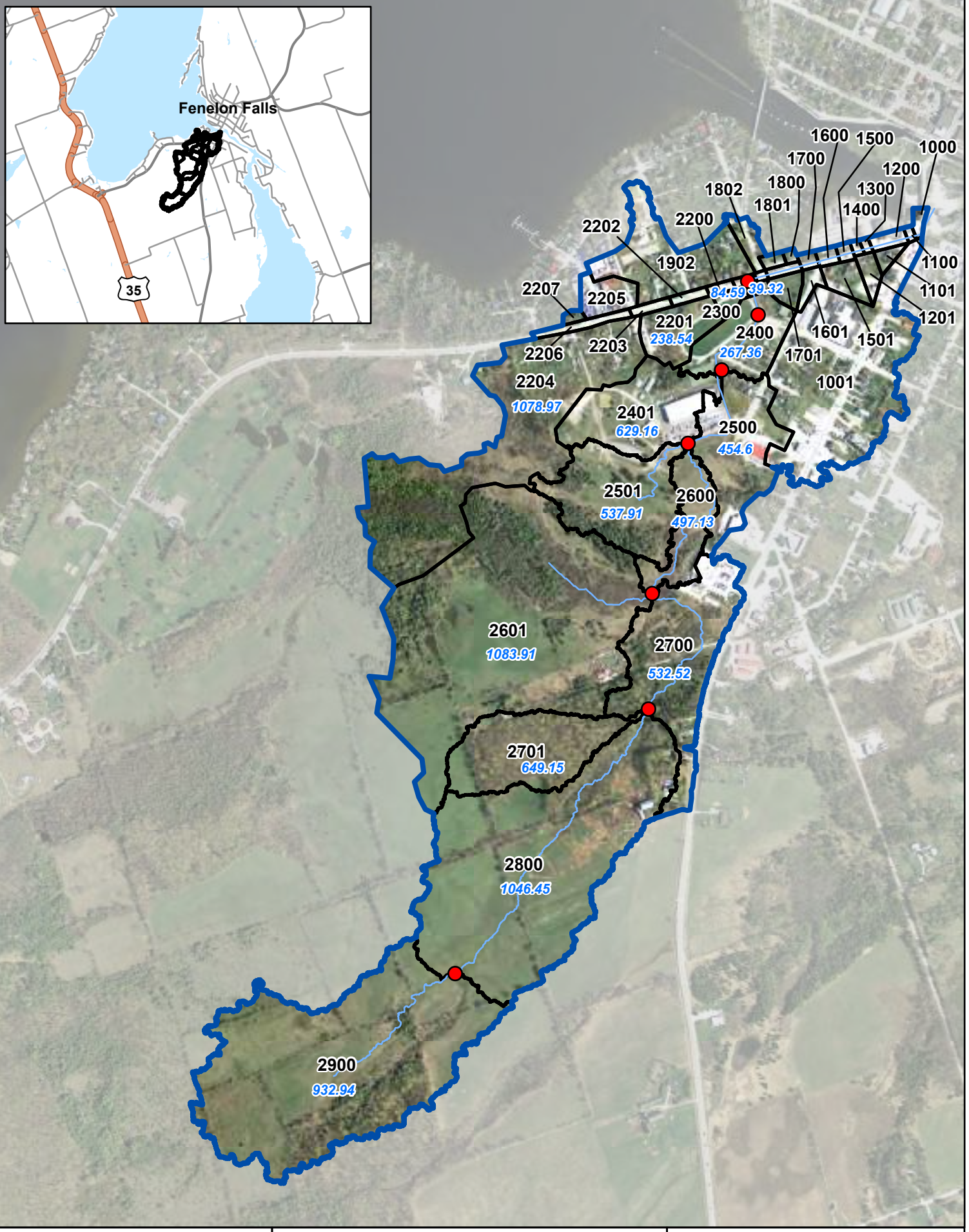

Fenelon Falls South Subcatchments

0 40 80 160 240 320
Meters

1:10,000

N

Fenelon Falls Watershed
Subcatchments
Flow Nodes
Watercourse
932.94 Flow Length

Road Classification

Highway
County Road
Local Street

KAWARTHA CONSERVATION

City of KAWARTHA LAKES

This map is for information purposes only and the Kawartha Conservation takes no responsibility for, nor guarantees, the accuracy of the information contained within the map. Prepared by Kawartha Conservation: April 2023. Produced using information provided by the Ministry of Natural Resources, Kawartha Conservation and other municipal sources. Copyright (c) Queen's Printer, 2023.

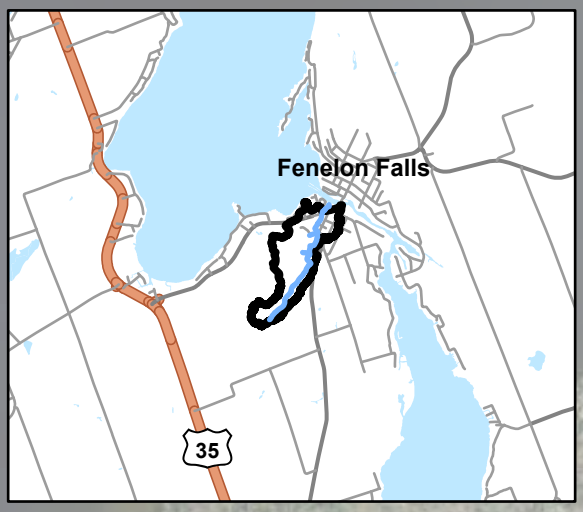

Fenelon Falls South Watershed

0 40 80 160 240 320
Meters

1:10,000

N

Fenelon Falls Watershed

Watercourse

Spill

Road Classification

Highway

County Road

Local Street

KAWARTHA CONSERVATION

City of KAWARTHA LAKES

This map is for information purposes only and the Kawartha Conservation takes no responsibility for, nor guarantees, the accuracy of the information contained within the map. Prepared by Kawartha Conservation: April 2023. Produced using information provided by the Ministry of Natural Resources, Kawartha Conservation and other municipal sources. Copyright (c) Queen's Printer, 2023.

Appendix E
Hydrology Parameters Calculations

CN (II) Lookup table

All values derived from Hydrology Modeling Parameters Selection (September 2013)

Land Use	Soil Type	*lookup_value*	CN (II)	
Estate Density Residential	A	*Estate D-A*	51	
Estate Density Residential	AB	*Estate D-AB*	60	
Estate Density Residential	B	*Estate D-B*	68	
Estate Density Residential	BC	*Estate D-BC*	74	
Estate Density Residential	C	*Estate D-C*	79	
Estate Density Residential	CD	*Estate D-CD*	82	
Estate Density Residential	D	*Estate D-D*	84	
Estate Density Residential	D	*Estate D-D*	100	
Low Density Residential	A	*Low Dens-A*	59	
Low Density Residential	AB	*Low Dens-AB*	67	
Low Density Residential	B	*Low Dens-B*	74	
Low Density Residential	BC	*Low Dens-BC*	78	
Low Density Residential	C	*Low Dens-C*	82	
Low Density Residential	CD	*Low Dens-CD*	85	
Low Density Residential	D	*Low Dens-D*	87	
Low Density Residential	D	*Low Dens-D*	100	
High Density Residential	A	*High Den-A*	77	
High Density Residential	AB	*High Den-AB*	81	
High Density Residential	B	*High Den-B*	85	
High Density Residential	BC	*High Den-BC*	88	
High Density Residential	C	*High Den-C*	90	
High Density Residential	CD	*High Den-CD*	91	
High Density Residential	D	*High Den-D*	92	
High Density Residential	D	*High Den-D*	100	
Medium Density Residential	A	*Medium D-A*	59	
Medium Density Residential	AB	*Medium D-AB*	67	
Medium Density Residential	B	*Medium D-B*	74	
Medium Density Residential	BC	*Medium D-BC*	78	
Medium Density Residential	C	*Medium D-C*	82	
Medium Density Residential	CD	*Medium D-CD*	85	
Medium Density Residential	D	*Medium D-D*	87	
Medium Density Residential	D	*Medium D-D*	100	
cemetary	A	*cemetary-A*	49	
cemetary	AB	*cemetary-AB*	59	
cemetary	B	*cemetary-B*	69	
cemetary	BC	*cemetary-BC*	74	
cemetary	C	*cemetary-C*	79	
cemetary	CD	*cemetary-CD*	80	
cemetary	D	*cemetary-D*	80	
cemetary	D	*cemetary-D*	100	
Main Central Area	A	*Main Cen-A*	89	usingCommercial
Main Central Area	AB	*Main Cen-AB*	91	
Main Central Area	B	*Main Cen-B*	92	
Main Central Area	BC	*Main Cen-BC*	93	
Main Central Area	C	*Main Cen-C*	94	
Main Central Area	CD	*Main Cen-CD*	95	

CN (II) Lookup table

All values derived from Hydrology Modeling Parameters Selection (September 2013)

Land Use	Soil Type	*lookup_value*	CN (II)	
Main Central Area	D	*Main Cen-D*	95	
Main Central Area	D	*Main Cen-D*	100	
Commercial	A	*Commerci-A*	89	
Commercial	AB	*Commerci-AB*	91	
Commercial	B	*Commerci-B*	92	
Commercial	BC	*Commerci-BC*	93	
Commercial	C	*Commerci-C*	94	
Commercial	CD	*Commerci-CD*	95	
Commercial	D	*Commerci-D*	95	
Commercial	D	*Commerci-D*	100	
Agricultural	A	*Agricult-A*	64	*usingClose-seeded*
Agricultural	AB	*Agricult-AB*	70	*legumes or*
Agricultural	B	*Agricult-B*	75	*rotation meadow*
Agricultural	BC	*Agricult-BC*	79	*values*
Agricultural	C	*Agricult-C*	82	
Agricultural	CD	*Agricult-CD*	84	
Agricultural	D	*Agricult-D*	85	
Agricultural	D	*Agricult-D*	100	
NAGAgri	A	*NAGAgri-A*	49	
NAGAgri	AB	*NAGAgri-AB*	62	
NAGAgri	B	*NAGAgri-B*	69	
NAGAgri	BC	*NAGAgri-BC*	74	
NAGAgri	C	*NAGAgri-C*	79	
NAGAgri	CD	*NAGAgri-CD*	82	
NAGAgri	D	*NAGAgri-D*	84	
NAGAgri	D	*NAGAgri-D*	100	
Industrial	A	*Industri-A*	81	
Industrial	AB	*Industri-AB*	85	
Industrial	B	*Industri-B*	88	
Industrial	BC	*Industri-BC*	90	
Industrial	C	*Industri-C*	91	
Industrial	CD	*Industri-CD*	92	
Industrial	D	*Industri-D*	93	
Industrial	D	*Industri-D*	100	
Meadow	A	*Meadow-A*	46	
Meadow	AB	*Meadow-AB*	56	
Meadow	B	*Meadow-B*	66	
Meadow	BC	*Meadow-BC*	71	
Meadow	C	*Meadow-C*	77	
Meadow	CD	*Meadow-CD*	78	
Meadow	D	*Meadow-D*	82	
Meadow	D	*Meadow-D*	100	
Alvar	A	*Alvar-A*	100	
Alvar	AB	*Alvar-AB*	100	
Alvar	B	*Alvar-B*	100	
Alvar	BC	*Alvar-BC*	100	

CN (II) Lookup table

All values derived from Hydrology Modeling Parameters Selection (September 2013)

Land Use	Soil Type	*lookup_value*	CN (II)	
Alvar	C	*Alvar-C*	100	
Alvar	CD	*Alvar-CD*	100	
Alvar	D	*Alvar-D*	100	
Alvar	D	*Alvar-D*	100	
Open Water Body	A	*Open Wat-A*	50	
Open Water Body	AB	*Open Wat-AB*	50	
Open Water Body	B	*Open Wat-B*	50	
Open Water Body	BC	*Open Wat-BC*	50	
Open Water Body	C	*Open Wat-C*	50	
Open Water Body	CD	*Open Wat-CD*	50	
Open Water Body	D	*Open Wat-D*	50	
Open Water Body	D	*Open Wat-D*	50	
pasture	A	*pasture -A*	49	
pasture	AB	*pasture -AB*	62	
pasture	B	*pasture -B*	69	
pasture	BC	*pasture -BC*	74	
pasture	C	*pasture -C*	79	
pasture	CD	*pasture -CD*	82	
pasture	D	*pasture -D*	84	
pasture	D	*pasture -D*	100	
railway	A	*railway-A*	76	*using gravel road*
railway	AB	*railway-AB*	81	*parameters*
railway	B	*railway-B*	85	
railway	BC	*railway-BC*	87	
railway	C	*railway-C*	89	
railway	CD	*railway-CD*	90	
railway	D	*railway-D*	91	
railway	D	*railway-D*	100	
Roads	A	*Roads-A*	98	
Roads	AB	*Roads-AB*	98	
Roads	B	*Roads-B*	98	
Roads	BC	*Roads-BC*	98	
Roads	C	*Roads-C*	98	
Roads	CD	*Roads-CD*	98	
Roads	D	*Roads-D*	98	
Roads	D	*Roads-D*	98	
Wetland	A	*Wetland-A*	50	
Wetland	AB	*Wetland-AB*	50	
Wetland	B	*Wetland-B*	50	
Wetland	BC	*Wetland-BC*	50	
Wetland	C	*Wetland-C*	50	
Wetland	CD	*Wetland-CD*	50	
Wetland	D	*Wetland-D*	50	
Wetland	D	*Wetland-D*	50	
Woods	A	*Woods-A*	36	
Woods	AB	*Woods-AB*	48	

CN (II) Lookup table

All values derived from Hydrology Modeling Parameters Selection (September 2013)

Land Use	Soil Type	*lookup_value*	CN (II)	
Woods	B	*Woods-B*	60	
Woods	BC	*Woods-BC*	67	
Woods	C	*Woods-C*	73	
Woods	CD	*Woods-CD*	74	
Woods	D	*Woods-D*	79	
Woods	D	*Woods-D*	100	
Parks And Open Space	A	*Parks An-A*	49	
Parks And Open Space	AB	*Parks An-AB*	59	
Parks And Open Space	B	*Parks An-B*	69	
Parks And Open Space	BC	*Parks An-BC*	74	
Parks And Open Space	C	*Parks An-C*	79	
Parks And Open Space	CD	*Parks An-CD*	80	
Parks And Open Space	D	*Parks An-D*	80	
Parks And Open Space	D	*Parks An-D*	100	*usingCommercial*
Institutional	A	*Institut-A*	89	*parameters*
Institutional	B	*Institut-B*	92	
Institutional	C	*Institut-C*	94	
Institutional	D	*Institut-D*	95	
Institutional	D	*Institut-D*	100	
pits/quarries	A	*pits/qua-A*	98	
pits/quarries	AB	*pits/qua-AB*	98	
pits/quarries	B	*pits/qua-B*	98	
pits/quarries	BC	*pits/qua-BC*	98	
pits/quarries	C	*pits/qua-C*	98	
pits/quarries	CD	*pits/qua-CD*	98	
pits/quarries	D	*pits/qua-D*	98	
pits/quarries	D	*pits/qua-D*	98	
Barren Rock	A	*Barren R-A*	100	
Barren Rock	AB	*Barren R-AB*	100	
Barren Rock	B	*Barren R-B*	100	
Barren Rock	BC	*Barren R-BC*	100	
Barren Rock	C	*Barren R-C*	100	
Barren Rock	CD	*Barren R-CD*	100	
Barren Rock	D	*Barren R-D*	100	
Barren Rock	D	*Barren R-D*	100	
Environmental Protection	A	*Environm-A*	57	Based on Poor Quality
Environmental Protection	AB	*Environm-AB*	65	
Environmental Protection	B	*Environm-B*	73	
Environmental Protection	BC	*Environm-BC*	78	
Environmental Protection	C	*Environm-C*	82	
Environmental Protection	CD	*Environm-CD*	84	
Environmental Protection	D	*Environm-D*	86	
Environmental Protection	D	*Environm-D*	100	
Residential	A	*Resident-A*	61	1/4Acre Lots
Residential	AB	*Resident-AB*	68	
Residential	B	*Resident-B*	75	

CN (II) Lookup table

All values derived from Hydrology Modeling Parameters Selection (September 2013)

Land Use	Soil Type	*lookup_value*	CN (II)
Residential	BC	*Resident-BC*	79
Residential	C	*Resident-C*	83
Residential	CD	*Resident-CD*	85
Residential	D	*Resident-D*	87
Residential	D	*Resident-D*	100

Woods-GrassCombination

RunoffCoefficient (C) Lookup table

All values derived from Hydrology Modeling Parameters Selection (September 2013)

Land Use	Soil Type	*lookup_value*	C	
Estate Density Residential	A	*Estate D-A*	0.25	
Estate Density Residential	AB	*Estate D-AB*	0.25	
Estate Density Residential	B	*Estate D-B*	0.25	
Estate Density Residential	BC	*Estate D-BC*	0.25	
Estate Density Residential	C	*Estate D-C*	0.25	
Estate Density Residential	CD	*Estate D-CD*	0.25	
Estate Density Residential	D	*Estate D-D*	0.25	
Low Density Residential	A	*Low Dens-A*	0.45	
Low Density Residential	AB	*Low Dens-AB*	0.45	
Low Density Residential	B	*Low Dens-B*	0.45	
Low Density Residential	BC	*Low Dens-BC*	0.45	
Low Density Residential	C	*Low Dens-C*	0.45	
Low Density Residential	CD	*Low Dens-CD*	0.45	
Low Density Residential	D	*Low Dens-D*	0.45	
High Density Residential	A	*High Den-A*	0.60	
High Density Residential	AB	*High Den-AB*	0.60	
High Density Residential	B	*High Den-B*	0.60	
High Density Residential	BC	*High Den-BC*	0.60	
High Density Residential	C	*High Den-C*	0.60	
High Density Residential	CD	*High Den-CD*	0.60	
High Density Residential	D	*High Den-D*	0.60	
Medium Density Residential	A	*Medium D-A*	0.45	
Medium Density Residential	AB	*Medium D-AB*	0.45	
Medium Density Residential	B	*Medium D-B*	0.45	
Medium Density Residential	BC	*Medium D-BC*	0.45	
Medium Density Residential	C	*Medium D-C*	0.45	
Medium Density Residential	CD	*Medium D-CD*	0.45	
Medium Density Residential	D	*Medium D-D*	0.45	
cemetary	A	*cemetary-A*	0.25	
cemetary	AB	*cemetary-AB*	0.25	
cemetary	B	*cemetary-B*	0.25	
cemetary	BC	*cemetary-BC*	0.25	
cemetary	C	*cemetary-C*	0.25	
cemetary	CD	*cemetary-CD*	0.25	
cemetary	D	*cemetary-D*	0.25	
Main Central Area	A	*Main Cen-A*	0.90	usingCommercial
Main Central Area	AB	*Main Cen-AB*	0.90	
Main Central Area	B	*Main Cen-B*	0.90	
Main Central Area	BC	*Main Cen-BC*	0.90	
Main Central Area	C	*Main Cen-C*	0.90	
Main Central Area	CD	*Main Cen-CD*	0.90	
Main Central Area	D	*Main Cen-D*	0.90	
Commercial	A	*Commerci-A*	0.90	
Commercial	AB	*Commerci-AB*	0.90	
Commercial	B	*Commerci-B*	0.90	
Commercial	BC	*Commerci-BC*	0.90	
Commercial	C	*Commerci-C*	0.90	

Commercial	CD	*Commerci-CD*	0.90
Commercial	D	*Commerci-D*	0.90
Agricultural	A	*Agricult-A*	0.22
Agricultural	AB	*Agricult-AB*	0.22
Agricultural	B	*Agricult-B*	0.35
Agricultural	BC	*Agricult-BC*	0.35
Agricultural	C	*Agricult-C*	0.35
Agricultural	CD	*Agricult-CD*	0.55
Agricultural	D	*Agricult-D*	0.55
NAGAgri	A	*NAGAgri-A*	0.10
NAGAgri	AB	*NAGAgri-AB*	0.10
NAGAgri	B	*NAGAgri-B*	0.28
NAGAgri	BC	*NAGAgri-BC*	0.28
NAGAgri	C	*NAGAgri-C*	0.28
NAGAgri	CD	*NAGAgri-CD*	0.40
NAGAgri	D	*NAGAgri-D*	0.40
Industrial	A	*Industri-A*	0.9
Industrial	AB	*Industri-AB*	0.9
Industrial	B	*Industri-B*	0.9
Industrial	BC	*Industri-BC*	0.9
Industrial	C	*Industri-C*	0.9
Industrial	CD	*Industri-CD*	0.9
Industrial	D	*Industri-D*	0.9
Meadow	A	*Meadow-A*	0.10
Meadow	AB	*Meadow-AB*	0.10
Meadow	B	*Meadow-B*	0.28
Meadow	BC	*Meadow-BC*	0.28
Meadow	C	*Meadow-C*	0.28
Meadow	CD	*Meadow-CD*	0.40
Meadow	D	*Meadow-D*	0.40
Alvar	A	*Alvar-A*	1
Alvar	AB	*Alvar-AB*	1
Alvar	B	*Alvar-B*	1
Alvar	BC	*Alvar-BC*	1
Alvar	C	*Alvar-C*	1
Alvar	CD	*Alvar-CD*	1
Alvar	D	*Alvar-D*	1
Open Water Body	A	*Open Wat-A*	0.10
Open Water Body	AB	*Open Wat-AB*	0.10
Open Water Body	B	*Open Wat-B*	0.10
Open Water Body	BC	*Open Wat-BC*	0.10
Open Water Body	C	*Open Wat-C*	0.10
Open Water Body	CD	*Open Wat-CD*	0.10
Open Water Body	D	*Open Wat-D*	0.10
pasture	A	*pasture -A*	0.40
pasture	AB	*pasture -AB*	0.40
pasture	B	*pasture -B*	0.40
pasture	BC	*pasture -BC*	0.40
pasture	C	*pasture -C*	0.40
pasture	CD	*pasture -CD*	0.40
pasture	D	*pasture -D*	0.40
Aggregate	A	*Aggregat-A*	0.95

Aggregate	AB	*Aggregat-AB*	0.95
Aggregate	B	*Aggregat-B*	0.95
Aggregate	BC	*Aggregat-BC*	0.95
Aggregate	C	*Aggregat-C*	0.95
Aggregate	CD	*Aggregat-CD*	0.95
Aggregate	D	*Aggregat-D*	0.95
railway	A	*railway-A*	1
railway	AB	*railway-AB*	1
railway	B	*railway-B*	1
railway	BC	*railway-BC*	1
railway	C	*railway-C*	1
railway	CD	*railway-CD*	1
railway	D	*railway-D*	1
Roads	A	*Roads-A*	0.90
Roads	AB	*Roads-AB*	0.90
Roads	B	*Roads-B*	0.90
Roads	BC	*Roads-BC*	0.90
Roads	C	*Roads-C*	0.90
Roads	CD	*Roads-CD*	0.90
Roads	D	*Roads-D*	0.90
Wetland	A	*Wetland-A*	0.08
Wetland	AB	*Wetland-AB*	0.08
Wetland	B	*Wetland-B*	0.25
Wetland	BC	*Wetland-BC*	0.25
Wetland	C	*Wetland-C*	0.25
Wetland	CD	*Wetland-CD*	0.35
Wetland	D	*Wetland-D*	0.35
Woods	A	*Woods-A*	0.25
Woods	AB	*Woods-AB*	0.25
Woods	B	*Woods-B*	0.25
Woods	BC	*Woods-BC*	0.25
Woods	C	*Woods-C*	0.25
Woods	CD	*Woods-CD*	0.25
Woods	D	*Woods-D*	0.25
Parks And Open Space	A	*Parks An-A*	0.25
Parks And Open Space	AB	*Parks An-AB*	0.25
Parks And Open Space	B	*Parks An-B*	0.25
Parks And Open Space	BC	*Parks An-BC*	0.25
Parks And Open Space	C	*Parks An-C*	0.25
Parks And Open Space	CD	*Parks An-CD*	0.25
Parks And Open Space	D	*Parks An-D*	0.25
Institutional	A	*Institut-A*	1.00
Institutional	AB	*Institut-AB*	1.00
Institutional	B	*Institut-B*	1.00
Institutional	BC	*Institut-BC*	1.00
Institutional	C	*Institut-C*	1.00
Institutional	CD	*Institut-CD*	1.00
Institutional	D	*Institut-D*	1.00
pits/quarries	A	*pits/qua-A*	1.00
pits/quarries	AB	*pits/qua-AB*	1.00
pits/quarries	B	*pits/qua-B*	1.00
pits/quarries	BC	*pits/qua-BC*	1.00

pits/quarries	C	*pits/qua-C*	1.00	
pits/quarries	CD	*pits/qua-CD*	1.00	
pits/quarries	D	*pits/qua-D*	1.00	
Barren Rock	A	*Barren R-A*	1.00	
Barren Rock	AB	*Barren R-AB*	1.00	
Barren Rock	B	*Barren R-B*	1.00	
Barren Rock	BC	*Barren R-BC*	1.00	
Barren Rock	C	*Barren R-C*	1.00	
Barren Rock	CD	*Barren R-CD*	1.00	
Barren Rock	D	*Barren R-D*	1.00	
Environmental Protection	A	*Environm-A*	0.32	Based on 60% Woods,
Environmental Protection	AB	*Environm-AB*	0.32	
Environmental Protection	B	*Environm-B*	0.32	
Environmental Protection	BC	*Environm-BC*	0.32	
Environmental Protection	C	*Environm-C*	0.32	
Environmental Protection	CD	*Environm-CD*	0.32	
Environmental Protection	D	*Environm-D*	0.32	
Residential	A	*Resident-A*	0.5	1/4Acre Lots
Residential	AB	*Resident-AB*	0.5	
Residential	B	*Resident-B*	0.5	
Residential	BC	*Resident-BC*	0.5	
Residential	C	*Resident-C*	0.5	
Residential	CD	*Resident-CD*	0.5	
Residential	D	*Resident-D*	0.5	

T_{imp} Lookup table

All values derived from Hydrology Modeling Parameters Selection (September 2013)

Land Use	Soil Type	*lookup_value*	T_{imp}	
Estate Density Residential	A	*Estate D-A*	0.17	
Estate Density Residential	AB	*Estate D-AB*	0.17	
Estate Density Residential	B	*Estate D-B*	0.17	
Estate Density Residential	BC	*Estate D-BC*	0.17	
Estate Density Residential	C	*Estate D-C*	0.17	
Estate Density Residential	CD	*Estate D-CD*	0.17	
Estate Density Residential	D	*Estate D-D*	0.17	
Low Density Residential	A	*Low Dens-A*	0.5	
Low Density Residential	AB	*Low Dens-AB*	0.5	
Low Density Residential	B	*Low Dens-B*	0.5	
Low Density Residential	BC	*Low Dens-BC*	0.5	
Low Density Residential	C	*Low Dens-C*	0.5	
Low Density Residential	CD	*Low Dens-CD*	0.5	
Low Density Residential	D	*Low Dens-D*	0.5	
High Density Residential	A	*High Den-A*	0.52	Existing lot
High Density Residential	AB	*High Den-AB*	0.52	and 550 sq
High Density Residential	B	*High Den-B*	0.52	1/8Acre
High Density Residential	BC	*High Den-BC*	0.52	therefore u
High Density Residential	C	*High Den-C*	0.52	middle valu
High Density Residential	CD	*High Den-CD*	0.52	VO2 input p
High Density Residential	D	*High Den-D*	0.52	values
Medium Density Residential	A	*Medium D-A*	0.65	
Medium Density Residential	AB	*Medium D-AB*	0.65	
Medium Density Residential	B	*Medium D-B*	0.65	
Medium Density Residential	BC	*Medium D-BC*	0.65	
Medium Density Residential	C	*Medium D-C*	0.65	
Medium Density Residential	CD	*Medium D-CD*	0.65	
Medium Density Residential	D	*Medium D-D*	0.65	
cemetary	A	*cemetary-A*	0.01	
cemetary	AB	*cemetary-AB*	0.01	
cemetary	B	*cemetary-B*	0.01	
cemetary	BC	*cemetary-BC*	0.01	
cemetary	C	*cemetary-C*	0.01	
cemetary	CD	*cemetary-CD*	0.01	
cemetary	D	*cemetary-D*	0.01	
Main Central Area	A	*Main Cen-A*	0.01	
Main Central Area	AB	*Main Cen-AB*	0.01	
Main Central Area	B	*Main Cen-B*	0.01	
Main Central Area	BC	*Main Cen-BC*	0.01	
Main Central Area	C	*Main Cen-C*	0.01	
Main Central Area	CD	*Main Cen-CD*	0.01	
Main Central Area	D	*Main Cen-D*	0.01	
Commercial	A	*Commerci-A*	0.85	
Commercial	AB	*Commerci-AB*	0.85	
Commercial	B	*Commerci-B*	0.85	
Commercial	BC	*Commerci-BC*	0.85	

T_{imp} Lookup table

All values derived from Hydrology Modeling Parameters Selection (September 2013)

Land Use	Soil Type	*lookup_value*	T_{imp}	
Commercial	C	*Commerci-C*	0.85	
Commercial	CD	*Commerci-CD*	0.85	
Commercial	D	*Commerci-D*	0.85	
Agricultural	A	*Agricult-A*	0.01	
Agricultural	AB	*Agricult-AB*	0.01	
Agricultural	B	*Agricult-B*	0.01	
Agricultural	BC	*Agricult-BC*	0.01	
Agricultural	C	*Agricult-C*	0.01	
Agricultural	CD	*Agricult-CD*	0.01	
Agricultural	D	*Agricult-D*	0.01	
NAGAgri	A	*NAGAgri-A*	0.9	
NAGAgri	AB	*NAGAgri-AB*	0.9	
NAGAgri	B	*NAGAgri-B*	0.9	
NAGAgri	BC	*NAGAgri-BC*	0.9	
NAGAgri	C	*NAGAgri-C*	0.9	
NAGAgri	CD	*NAGAgri-CD*	0.9	
NAGAgri	D	*NAGAgri-D*	0.9	
Industrial	A	*Industri-A*	0.9	
Industrial	AB	*Industri-AB*	0.9	
Industrial	B	*Industri-B*	0.9	
Industrial	BC	*Industri-BC*	0.9	
Industrial	C	*Industri-C*	0.9	
Industrial	CD	*Industri-CD*	0.9	
Industrial	D	*Industri-D*	0.9	
Meadow	A	*Meadow-A*	0.01	*usingClose-seeded*
Meadow	AB	*Meadow-AB*	0.01	*legumes or*
Meadow	B	*Meadow-B*	0.01	*rotation meadow*
Meadow	BC	*Meadow-BC*	0.01	*values*
Meadow	C	*Meadow-C*	0.01	
Meadow	CD	*Meadow-CD*	0.01	
Meadow	D	*Meadow-D*	0.01	
Alvar	A	*Alvar-A*	0.01	
Alvar	AB	*Alvar-AB*	0.01	
Alvar	B	*Alvar-B*	0.01	
Alvar	BC	*Alvar-BC*	0.01	
Alvar	C	*Alvar-C*	0.01	
Alvar	CD	*Alvar-CD*	0.01	
Alvar	D	*Alvar-D*	0.01	
Open Water Body	A	*Open Wat-A*	0.8	
Open Water Body	AB	*Open Wat-AB*	0.8	
Open Water Body	B	*Open Wat-B*	0.8	
Open Water Body	BC	*Open Wat-BC*	0.8	
Open Water Body	C	*Open Wat-C*	0.8	
Open Water Body	CD	*Open Wat-CD*	0.8	
Open Water Body	D	*Open Wat-D*	0.8	
pasture	A	*pasture -A*	0.01	

T_{imp} Lookup table

All values derived from Hydrology Modeling Parameters Selection (September 2013)

Land Use	Soil Type	*lookup_value*	T_{imp}	
pasture	AB	*pasture -AB*	0.01	
pasture	B	*pasture -B*	0.01	
pasture	BC	*pasture -BC*	0.01	
pasture	C	*pasture -C*	0.01	
pasture	CD	*pasture -CD*	0.01	
pasture	D	*pasture -D*	0.01	
Aggregate	A	*Aggregat-A*	0.01	
Aggregate	AB	*Aggregat-AB*	0.01	
Aggregate	B	*Aggregat-B*	0.01	
Aggregate	BC	*Aggregat-BC*	0.01	
Aggregate	C	*Aggregat-C*	0.01	
Aggregate	CD	*Aggregat-CD*	0.01	
Aggregate	D	*Aggregat-D*	0.01	
railway	A	*railway-A*	0.05	*using gravel road*
railway	AB	*railway-AB*	0.05	*parameters*
railway	B	*railway-B*	0.05	
railway	BC	*railway-BC*	0.05	
railway	C	*railway-C*	0.05	
railway	CD	*railway-CD*	0.05	
railway	D	*railway-D*	0.05	
Roads	A	*Roads-A*	0.9	
Roads	AB	*Roads-AB*	0.9	
Roads	B	*Roads-B*	0.9	
Roads	BC	*Roads-BC*	0.9	
Roads	C	*Roads-C*	0.9	
Roads	CD	*Roads-CD*	0.9	
Roads	D	*Roads-D*	0.9	
Wetland	A	*Wetland-A*	0.01	
Wetland	AB	*Wetland-AB*	0.01	
Wetland	B	*Wetland-B*	0.01	
Wetland	BC	*Wetland-BC*	0.01	
Wetland	C	*Wetland-C*	0.01	
Wetland	CD	*Wetland-CD*	0.01	
Wetland	D	*Wetland-D*	0.01	
Woods	A	*Woods-A*	0	
Woods	AB	*Woods-AB*	0	
Woods	B	*Woods-B*	0	
Woods	BC	*Woods-BC*	0	
Woods	C	*Woods-C*	0	
Woods	CD	*Woods-CD*	0	
Woods	D	*Woods-D*	0	
Parks And Open Space	A	*Parks An-A*	0	
Parks And Open Space	AB	*Parks An-AB*	0	
Parks And Open Space	B	*Parks An-B*	0	
Parks And Open Space	BC	*Parks An-BC*	0	
Parks And Open Space	C	*Parks An-C*	0	

T_{imp} Lookup table

All values derived from Hydrology Modeling Parameters Selection (September 2013)

Land Use	Soil Type	*lookup_value*	T_{imp}
Parks And Open Space	CD	*Parks An-CD*	0
Parks And Open Space	D	*Parks An-D*	0
Institutional	A	*Institut-A*	0.9
Institutional	AB	*Institut-AB*	0.9
Institutional	B	*Institut-B*	0.9
Institutional	BC	*Institut-BC*	0.9
Institutional	C	*Institut-C*	0.9
Institutional	CD	*Institut-CD*	0.9
Institutional	D	*Institut-D*	0.9
pits/quarries	A	*pits/qua-A*	0.9
pits/quarries	AB	*pits/qua-AB*	0.9
pits/quarries	B	*pits/qua-B*	0.9
pits/quarries	BC	*pits/qua-BC*	0.9
pits/quarries	C	*pits/qua-C*	0.9
pits/quarries	CD	*pits/qua-CD*	0.9
pits/quarries	D	*pits/qua-D*	0.9
Barren Rock	A	*Barren R-A*	0.9
Barren Rock	AB	*Barren R-AB*	0.9
Barren Rock	B	*Barren R-B*	0.9
Barren Rock	BC	*Barren R-BC*	0.9
Barren Rock	C	*Barren R-C*	0.9
Barren Rock	CD	*Barren R-CD*	0.9
Barren Rock	D	*Barren R-D*	0.9
Environmental Protection	A	*Environm-A*	0.55
Environmental Protection	AB	*Environm-AB*	0.55
Environmental Protection	B	*Environm-B*	0.55
Environmental Protection	BC	*Environm-BC*	0.55
Environmental Protection	C	*Environm-C*	0.55
Environmental Protection	CD	*Environm-CD*	0.55
Environmental Protection	D	*Environm-D*	0.55
Residential	A	*Resident-A*	0.9
Residential	AB	*Resident-AB*	0.9
Residential	B	*Resident-B*	0.9
Residential	BC	*Resident-BC*	0.9
Residential	C	*Resident-C*	0.9
Residential	CD	*Resident-CD*	0.9
Residential	D	*Resident-D*	0.9
Barren Rock	D	*Barren R-D*	0.9
Alvar	A	*Alvar-A*	0.9
Alvar	AB	*Alvar-AB*	0.9
Alvar	B	*Alvar-B*	0.9
Alvar	BC	*Alvar-BC*	0.9
Alvar	C	*Alvar-C*	0.9
Alvar	CD	*Alvar-CD*	0.9
Alvar	D	*Alvar-D*	0.9
Alvar	D	*Alvar-D*	0.9

T_{imp} Lookup table

All values derived from Hydrology Modeling Parameters Selection (September 2013)

Land Use	Soil Type	*lookup_value*	T_{imp}	
Aggregate	A	*Aggregat-A*	0.01	
Aggregate	AB	*Aggregat-AB*	0.01	
Aggregate	B	*Aggregat-B*	0.01	
Aggregate	BC	*Aggregat-BC*	0.01	
Aggregate	C	*Aggregat-C*	0.01	
Aggregate	CD	*Aggregat-CD*	0.01	
Aggregate	D	*Aggregat-D*	0.01	
Aggregate	D	*Aggregat-W*	0.01	
Environmental Protection	A	*Environm-A*	0	Based on Poor Quality
Environmental Protection	AB	*Environm-AB*	0	
Environmental Protection	B	*Environm-B*	0	
Environmental Protection	BC	*Environm-BC*	0	
Environmental Protection	C	*Environm-C*	0	
Environmental Protection	CD	*Environm-CD*	0	
Environmental Protection	D	*Environm-D*	0	
Environmental Protection	D	*Environm-D*	0	
Residential	A	*Resident-A*	0.5	1/4Acre Lots
Residential	AB	*Resident-AB*	0.5	
Residential	B	*Resident-B*	0.5	
Residential	BC	*Resident-BC*	0.5	
Residential	C	*Resident-C*	0.5	
Residential	CD	*Resident-CD*	0.5	
Residential	D	*Resident-D*	0.5	
Residential	D	*Resident-D*	0.5	

sAre 55' wide
m, or

se
ıes from
ɔarameter

Woods-GrassCombination

X_{imp} Lookup table

All values derived from Hydrology Modeling Parameters Selection (September 2013)

Land Use	Soil Type	*lookup_value*	Ximp	
Estate Density Residential	A	*Estate D-A*	0.10	
Estate Density Residential	AB	*Estate D-AB*	0.10	
Estate Density Residential	B	*Estate D-B*	0.10	
Estate Density Residential	BC	*Estate D-BC*	0.10	
Estate Density Residential	C	*Estate D-C*	0.10	
Estate Density Residential	CD	*Estate D-CD*	0.10	
Estate Density Residential	D	*Estate D-D*	0.10	
Estate Density Residential	D	*Estate D-D*	0.10	
Low Density Residential	A	*Low Dens-A*	0.25	
Low Density Residential	AB	*Low Dens-AB*	0.25	
Low Density Residential	B	*Low Dens-B*	0.25	
Low Density Residential	BC	*Low Dens-BC*	0.25	
Low Density Residential	C	*Low Dens-C*	0.25	
Low Density Residential	CD	*Low Dens-CD*	0.25	
Low Density Residential	D	*Low Dens-D*	0.25	
Low Density Residential	D	*Low Dens-D*	0.25	
Medium Density Residential	A	*Medium D-A*	0.25	Existing lot
Medium Density Residential	AB	*Medium D-AB*	0.25	and 550 sq
Medium Density Residential	B	*Medium D-B*	0.25	1/8Acre
Medium Density Residential	BC	*Medium D-BC*	0.25	therefore u
Medium Density Residential	C	*Medium D-C*	0.25	middle valu
Medium Density Residential	CD	*Medium D-CD*	0.25	VO2 input p
Medium Density Residential	D	*Medium D-D*	0.25	values
Medium Density Residential	D	*Medium D-D*	0.25	
High Density Residential	A	*High Den-A*	0.35	
High Density Residential	AB	*High Den-AB*	0.35	
High Density Residential	B	*High Den-B*	0.35	
High Density Residential	BC	*High Den-BC*	0.35	
High Density Residential	C	*High Den-C*	0.35	
High Density Residential	CD	*High Den-CD*	0.35	
High Density Residential	D	*High Den-D*	0.35	
High Density Residential	D	*High Den-D*	0.35	
cemetary	A	*cemetary-A*	0.01	
cemetary	AB	*cemetary-AB*	0.01	
cemetary	B	*cemetary-B*	0.01	
cemetary	BC	*cemetary-BC*	0.01	
cemetary	C	*cemetary-C*	0.01	
cemetary	CD	*cemetary-CD*	0.01	
cemetary	D	*cemetary-D*	0.01	
cemetary	D	*cemetary-D*	0.01	
Main Central Area	A	*Main Cen-A*	0.90	
Main Central Area	AB	*Main Cen-AB*	0.90	
Main Central Area	B	*Main Cen-B*	0.90	
Main Central Area	BC	*Main Cen-BC*	0.90	
Main Central Area	C	*Main Cen-C*	0.90	

X_{imp} Lookup table

All values derived from Hydrology Modeling Parameters Selection (September 2013)

Land Use	Soil Type	*lookup_value*	Ximp
Main Central Area	CD	*Main Cen-CD*	0.90
Main Central Area	D	*Main Cen-D*	0.90
Main Central Area	D	*Main Cen-D*	0.90
Commercial	A	*Commerci-A*	0.85
Commercial	AB	*Commerci-AB*	0.85
Commercial	B	*Commerci-B*	0.85
Commercial	BC	*Commerci-BC*	0.85
Commercial	C	*Commerci-C*	0.85
Commercial	CD	*Commerci-CD*	0.85
Commercial	D	*Commerci-D*	0.85
Commercial	D	*Commerci-D*	0.85
Agricultural	A	*Agricult-A*	0.01
Agricultural	AB	*Agricult-AB*	0.01
Agricultural	B	*Agricult-B*	0.01
Agricultural	BC	*Agricult-BC*	0.01
Agricultural	C	*Agricult-C*	0.01
Agricultural	CD	*Agricult-CD*	0.01
Agricultural	D	*Agricult-D*	0.01
Agricultural	D	*Agricult-D*	0.01
NAGAgri	A	*NAGAgri-A*	0.01
NAGAgri	AB	*NAGAgri-AB*	0.01
NAGAgri	B	*NAGAgri-B*	0.01
NAGAgri	BC	*NAGAgri-BC*	0.01
NAGAgri	C	*NAGAgri-C*	0.01
NAGAgri	CD	*NAGAgri-CD*	0.01
NAGAgri	D	*NAGAgri-D*	0.01
NAGAgri	D	*NAGAgri-D*	0.01
Industrial	A	*Industri-A*	0.75
Industrial	AB	*Industri-AB*	0.75
Industrial	B	*Industri-B*	0.75
Industrial	BC	*Industri-BC*	0.75
Industrial	C	*Industri-C*	0.75
Industrial	CD	*Industri-CD*	0.75
Industrial	D	*Industri-D*	0.75
Industrial	D	*Industri-D*	0.75
Meadow	A	*Meadow-A*	0.01
Meadow	AB	*Meadow-AB*	0.01
Meadow	B	*Meadow-B*	0.01
Meadow	BC	*Meadow-BC*	0.01
Meadow	C	*Meadow-C*	0.01
Meadow	CD	*Meadow-CD*	0.01
Meadow	D	*Meadow-D*	0.01
Meadow	D	*Meadow-D*	0.01
Parks and Open Space	A	*Parks an-A*	0.00
Parks and Open Space	AB	*Parks an-AB*	0.00

X_{imp} Lookup table

All values derived from Hydrology Modeling Parameters Selection (September 2013)

Land Use	Soil Type	*lookup_value*	Ximp
Parks and Open Space	B	*Parks an-B*	0.00
Parks and Open Space	BC	*Parks an-BC*	0.00
Parks and Open Space	C	*Parks an-C*	0.00
Parks and Open Space	CD	*Parks an-CD*	0.00
Parks and Open Space	D	*Parks an-D*	0.00
Parks and Open Space	D	*Parks an-D*	0.00
Open Water Body	A	*Open Wat-A*	0.01
Open Water Body	AB	*Open Wat-AB*	0.01
Open Water Body	B	*Open Wat-B*	0.01
Open Water Body	BC	*Open Wat-BC*	0.01
Open Water Body	C	*Open Wat-C*	0.01
Open Water Body	CD	*Open Wat-CD*	0.01
Open Water Body	D	*Open Wat-D*	0.01
Open Water Body	D	*Open Wat-D*	0.01
pasture land	A	*pasture -A*	0.01
pasture land	AB	*pasture -AB*	0.01
pasture land	B	*pasture -B*	0.01
pasture land	BC	*pasture -BC*	0.01
pasture land	C	*pasture -C*	0.01
pasture land	CD	*pasture -CD*	0.01
pasture land	D	*pasture -D*	0.01
pasture land	D	*pasture -D*	0.01
Aggregate	A	*Aggregat-A*	0.00
Aggregate	AB	*Aggregat-AB*	0.00
Aggregate	B	*Aggregat-B*	0.00
Aggregate	BC	*Aggregat-BC*	0.00
Aggregate	C	*Aggregat-C*	0.00
Aggregate	CD	*Aggregat-CD*	0.00
Aggregate	D	*Aggregat-D*	0.00
Aggregate	D	*Aggregat-D*	0.00
Wetland	A	*Wetland-A*	0.00
Wetland	AB	*Wetland-AB*	0.00
Wetland	B	*Wetland-B*	0.00
Wetland	BC	*Wetland-BC*	0.00
Wetland	C	*Wetland-C*	0.00
Wetland	CD	*Wetland-CD*	0.00
Wetland	D	*Wetland-D*	0.00
Wetland	D	*Wetland-D*	0.00
Woods	A	*Woods-A*	0.00
Woods	AB	*Woods-AB*	0.00
Woods	B	*Woods-B*	0.00
Woods	BC	*Woods-BC*	0.00
Woods	C	*Woods-C*	0.00
Woods	CD	*Woods-CD*	0.00
Woods	D	*Woods-D*	0.00

X_{imp} Lookup table

All values derived from Hydrology Modeling Parameters Selection (September 2013)

Land Use	Soil Type	*lookup_value*	Ximp	
Woods	D	*Woods-D*	0.00	
Institutional	A	*Institut-A*	0.30	
Institutional	AB	*Institut-AB*	0.30	
Institutional	B	*Institut-B*	0.30	
Institutional	BC	*Institut-BC*	0.30	
Institutional	C	*Institut-C*	0.30	
Institutional	CD	*Institut-CD*	0.30	
Institutional	D	*Institut-D*	0.30	
Institutional	D	*Institut-D*	0.30	
Roads	A	*Roads-A*	0.9	
Roads	AB	*Roads-AB*	0.9	
Roads	B	*Roads-B*	0.9	
Roads	BC	*Roads-BC*	0.9	
Roads	C	*Roads-C*	0.9	
Roads	CD	*Roads-CD*	0.9	
Roads	D	*Roads-D*	0.9	
Roads	D	*Roads-D*	0.9	
pits/quarries	A	*pits/qua-A*	0.90	
pits/quarries	AB	*pits/qua-AB*	0.90	
pits/quarries	B	*pits/qua-B*	0.90	
pits/quarries	BC	*pits/qua-BC*	0.90	
pits/quarries	C	*pits/qua-C*	0.90	
pits/quarries	CD	*pits/qua-CD*	0.90	
pits/quarries	D	*pits/qua-D*	0.90	
pits/quarries	D	*pits/qua-D*	0.90	
Barren Rock	A	*Barren R-A*	0.90	
Barren Rock	AB	*Barren R-AB*	0.90	
Barren Rock	B	*Barren R-B*	0.90	
Barren Rock	BC	*Barren R-BC*	0.90	
Barren Rock	C	*Barren R-C*	0.90	
Barren Rock	CD	*Barren R-CD*	0.90	
Barren Rock	D	*Barren R-D*	0.90	
Barren Rock	D	*Barren R-D*	0.90	
Alvar	A	*Alvar-A*	0.90	
Alvar	AB	*Alvar-AB*	0.90	
Alvar	B	*Alvar-B*	0.90	
Alvar	BC	*Alvar-BC*	0.90	
Alvar	C	*Alvar-C*	0.90	
Alvar	CD	*Alvar-CD*	0.90	
Alvar	D	*Alvar-D*	0.90	
Alvar	D	*Alvar-D*	0.90	
Environmental Protection	A	*Environm-A*	0	Based on Poor Quality
Environmental Protection	AB	*Environm-AB*	0	
Environmental Protection	B	*Environm-B*	0	
Environmental Protection	BC	*Environm-BC*	0	

X_{imp} Lookup table

All values derived from Hydrology Modeling Parameters Selection (September 2013)

Land Use	Soil Type	*lookup_value*	Ximp	
Environmental Protection	C	*Environm-C*	0	
Environmental Protection	CD	*Environm-CD*	0	
Environmental Protection	D	*Environm-D*	0	
Environmental Protection	D	*Environm-D*	0	
Residential	A	*Resident-A*	0.25	1/4Acre Lots
Residential	AB	*Resident-AB*	0.25	
Residential	B	*Resident-B*	0.25	
Residential	BC	*Resident-BC*	0.25	
Residential	C	*Resident-C*	0.25	
Residential	CD	*Resident-CD*	0.25	
Residential	D	*Resident-D*	0.25	
Residential	D	*Resident-D*	0.25	

total directlyConnected impervious

sAre 55' wide
m, or

se
ıes from
parameter

total directlyConnected impervious

total directlyConnected impervious

total directlyConnected impervious

Woods-GrassCombination

total directlyConnected impervious

ConvertCN(II) toCN (III)

CN (II)	CN (III)	CN (II)
0	0	0
0.5	1	0.5
0	2	0
1	3	1
1.5	4	1.5
2	5	2
2.3	6	2.3
2.5	7	2.5
3	8	3
3.5	9	3.5
4	10	4
4.5	11	4.5
4.8	12	4.8
5	13	5
5.5	14	5.5
6	15	6
6.5	16	6.5
7	17	7
8	18	8
8.5	19	8.5
9	20	9
9.5	21	9.5
10	22	10
11	23	11
11.5	24	11.5
12	25	12
12.5	26	12.5
13	27	13
14	28	14
14.5	29	14.5
15	30	15
15.5	31	15.5
16	32	16
17	33	17
18	34	18
19	35	19
19.5	36	19.5
20	37	20
21	38	21
22	39	22
23	40	23
23.5	41	23.5
24	42	24
25	43	25
26	44	26
27	45	27
27.5	46	27.5

28	47	28
29	48	29
30	49	30
31	50	31
31.5	51	31.5
32	52	32
33	53	33
34	54	34
35	55	35
36	56	36
37	57	37
38	58	38
39	59	39
40	60	40
41	61	41
42	62	42
43	63	43
44	64	44
45	65	45
46	66	46
47	67	47
48	68	48
49	69	49
50	70	50
51	70	51
52	71	52
53	72	53
54	73	54
55	74	55
56	74	56
57	75	57
58	76	58
59	77	59
60	78	60
61	78	61
62	79	62
63	80	63
64	81	64
65	82	65
66	82	66
67	83	67
68	84	68
69	84	69
70	85	70
71	85	71
72	86	72
73	87	73
74	88	74
75	88	75
76	89	76
77	89	77
78	90	78

79	90	79
80	91	80
81	91	81
82	92	82
83	93	83
84	93	84
85	94	85
86	94	86
87	95	87
88	95	88
89	96	89
90	96	90
91	97	91
92	97	92
93	98	93
94	98	94
95	98	95
96	99	96
97	99	97
98	99	98
99	100	99
100	100	100

Summary of values for FFS

Catchment	Area (Ha)	C	T_p (hr)	CN (II)	CN* (II)	X_{imp}	T_{imp}	Hyd
1000	12.88202	0.81		91		0.78	0.87	STANDHYD
1001	2.088044	0.77		87		0.54	0.75	STANDHYD
1100	63.737171	0.90		95		0.88	0.88	STANDHYD
1200	35.516086	0.90		95		0.88	0.88	STANDHYD
1201	14.192408	0.84		90		0.78	0.81	STANDHYD
1300	16.34167	0.90		95		0.88	0.88	STANDHYD
1400	21.73858	0.90		95		0.88	0.88	STANDHYD
1500	25.020989	0.86		94		0.82	0.85	STANDHYD
1600	211.891315	0.88		94		0.85	0.86	STANDHYD
1700	16.566392	0.85		94		0.81	0.85	STANDHYD
1701	52.720111	0.46		75		0.27	0.51	STANDHYD
1702	53.687349	0.87		91		0.80	0.83	STANDHYD
1800	41.604486	0.90		97		0.89	0.89	STANDHYD
1900	203.753076	0.89		97		0.88	0.89	STANDHYD
1901	7.900076	0.33		72		0.10	0.15	NASHYD
1902	49.014735	0.51		77		0.34	0.55	STANDHYD
2000	104.925236	0.90		98		0.89	0.90	STANDHYD
2001	54.287358	0.26		70		0.02	0.02	NASHYD
2100	204.442112	0.89		98		0.89	0.89	STANDHYD
2200	102.198867	0.87		97		0.86	0.86	STANDHYD
2201	159.723115	0.54		77		0.28	0.44	STANDHYD
2202	161.230806	0.84		95		0.82	0.83	STANDHYD
2300	110.70472	0.25		69		0.00	0.00	NASHYD
2400	66.021573	0.37		73		0.15	0.26	STANDHYD
2401	144.498815	0.97		91		0.29	0.87	STANDHYD
2500	63.480541	0.58		80		0.30	0.45	STANDHYD
2501	152.028973	0.73		85		0.18	0.53	STANDHYD
2600	53.16717	0.43		77		0.13	0.13	NASHYD
2601	60.953639	0.41		76		0.09	0.11	NASHYD
2700	52.018628	0.43		77		0.13	0.14	NASHYD
2800	23.481225	0.35		75		0.01	0.01	NASHYD
2900	282.930795	0.35		75		0.01	0.01	NASHYD

Summary of values for FFS

Catchment	Area (Ha)	C	T_p (hr)	CN(I)	CN (II)	CN (III)	X_{imp}	T_{imp}	Hyd
1000	**0.14**	0.81		81	91	96	0.78	0.87	STANDHYD
1001	**9.07**	0.77		74	87	94	0.54	0.75	STANDHYD
1100	0.05	0.90		89	95	98	0.88	0.88	STANDHYD
1101	0.19	0.88		83	92	96	0.83	0.84	STANDHYD
1200	0.24	0.90		89	95	98	0.88	0.88	STANDHYD
1201	0.32	0.84		79	90	95	0.78	0.81	STANDHYD
1300	**0.06**	0.90		89	95	98	0.88	0.88	STANDHYD
1400	0.06	0.90		89	95	98	0.88	0.88	STANDHYD
1500	0.11	0.86		87	94	97	0.82	0.85	STANDHYD
1501	0.56	0.72		69	84	92	0.40	0.70	STANDHYD
1600	0.15	0.88		87	94	97	0.85	0.86	STANDHYD
1601	0.26	0.74		75	88	94	0.56	0.75	STANDHYD
1700	0.12	0.85		87	94	97	0.81	0.85	STANDHYD
1701	0.38	0.46		56	75	87	0.27	0.51	STANDHYD
1702	0.07	0.87		81	91	96	0.80	0.83	STANDHYD
1800	0.14	0.90		93	97	99	0.89	0.89	STANDHYD
1801	0.13	0.89		81	91	96	0.83	0.84	STANDHYD
1802	0.45	0.59		66	82	91	0.46	0.63	STANDHYD
1900	0.05	0.89		93	97	99	0.88	0.89	STANDHYD
1901	0.07	0.33		52	72	86	0.10	0.15	NASHYD
1902	3.51	0.51		58	77	89	0.34	0.55	STANDHYD
2000	0.04	0.90		95	98	99	0.89	0.90	STANDHYD
2001	0.04	0.26		49	70	84	0.02	0.02	NASHYD
2100	0.05	0.89		95	98	99	0.89	0.89	STANDHYD
2101	0.04	0.25		48	69	84	0.00	0.00	NASHYD
2200	0.11	0.87		93	97	99	0.86	0.86	STANDHYD
2201	1.54	0.54		58	77	89	0.28	0.44	STANDHYD
2202	0.16	0.84		89	95	98	0.82	0.83	STANDHYD
2203	0.17	0.87		93	97	99	0.86	0.88	STANDHYD
2204	11.31	0.43		56	75	87	0.12	0.21	STANDHYD
2205	0.83	0.87		81	91	96	0.82	0.83	STANDHYD
2206	0.33	0.90		95	98	99	0.90	0.90	STANDHYD
2207	0.10	0.47		56	75	87	0.28	0.52	STANDHYD
2300	0.23	0.25		48	69	84	0.00	0.00	NASHYD
2400	2.47	0.37		53	73	86	0.15	0.26	STANDHYD
2401	4.17	0.97		81	91	96	0.29	0.87	STANDHYD
2500	4.12	0.58		63	80	90	0.30	0.45	STANDHYD
2501	4.86	0.73		70	85	93	0.18	0.53	STANDHYD
2600	2.14	0.43		58	77	89	0.13	0.13	NASHYD
2601	20.70	0.41		57	76	88	0.09	0.11	NASHYD
2700	5.04	0.43		58	77	89	0.13	0.14	NASHYD
2701	4.55	0.35		56	75	87	0.01	0.01	NASHYD
2800	16.90	0.35		56	75	87	0.01	0.01	NASHYD
2900	17.23	0.35		56	75	87	0.01	0.01	NASHYD

FFS

Subcatchment 1000

Landuse	HSG	Area (m^2)	Area (Ha)	CN	CN *Area
Commercial	B	129.45	0.01	92	1.2
Commercial	B	221.04	0.02	92	2.0
Open Water	B	144.64	0.01	50	0.7
Roads	B		0.09	98	8.6
Low Density Residential	B	22.21	0.00	74	0.2
		Total Area (Ha):	***0.14 Ha***		
				Total Area *CN=	***13***
				Weighted CN (II)	***91***
				CN (AMC III)	***97***

T_{imp}	Timp *Area
0.85	0.01
0.85	0.02
0.80	0.01
0.90	0.08
0.50	0.00
	0.12
Avg T_{imp}	***0.87***

X_{imp}	Ximp *Area
0.85	0.01
0.85	0.02
0.01	0.00
0.90	0.08
0.25	0.00
	0.11
Avg X_{imp}	***0.78***

C	C *Area
0.90	0.01
0.90	0.02
0.10	0.00
0.90	0.08
0.45	0.00
	0.1
Avg C	***0.81***

FFS

Subcatchment 1001

Landuse	HSG	Area (m^2)	Area (Ha)	CN	CN *Area	T_{imp}	Timp *Area	X_{imp}	Ximp *Area	C	C *Area
Institutional	B	15901.76	1.59	92	146.3	0.90	1.43	0.30	0.48	1.00	1.59
Institutional	B	2476.28	0.25	92	22.8	0.90	0.22	0.30	0.07	1.00	0.25
Commercial	B	22289.01	2.23	92	205.1	0.85	1.89	0.85	1.89	0.90	2.01
Commercial	B	851.48	0.09	92	7.8	0.85	0.07	0.85	0.07	0.90	0.08
Commercial	B	793.18	0.08	92	7.3	0.85	0.07	0.85	0.07	0.90	0.07
Commercial	B	4.08	0.00	92	0.0	0.85	0.00	0.85	0.00	0.90	0.00
Commercial	B	220.42	0.02	92	2.0	0.85	0.02	0.85	0.02	0.90	0.02
Roads	B		1.69	98	165.3	0.90	1.52	0.90	1.52	0.90	1.52
Low Density Residential	B	3998.16	0.40	74	29.6	0.50	0.20	0.25	0.10	0.45	0.18
Medium Density Residential	B	1044.35	0.10	74	7.7	0.65	0.07	0.25	0.03	0.45	0.05
Low Density Residential	B	21345.81	2.13	74	158.0	0.50	1.07	0.25	0.53	0.45	0.96
Low Density Residential	B	1450.45	0.15	74	10.7	0.50	0.07	0.25	0.04	0.45	0.07
Low Density Residential	B	481.57	0.05	74	3.6	0.50	0.02	0.25	0.01	0.45	0.02
Low Density Residential	B	0.29	0.00	74	0.0	0.50	0.00	0.25	0.00	0.45	0.00
Low Density Residential	B	2959.26	0.30	74	21.9	0.50	0.15	0.25	0.07	0.45	0.13
		Total Area (Ha):	***9.07 Ha***				6.81		4.91		6.94
			Total Area *CN=		***788***	***Avg T_{imp}***	***0.75***	***Avg X_{imp}***	***0.54***	***Avg C***	***0.77***
			Weighted CN (II)		***87***						
			CN (AMC III)		***95***						

FFS

Subcatchment 1100

Landuse	HSG	Area (m^2)	Area (Ha)	CN	CN *Area
Commercial	B	27.76	0.00	92	0.3
Commercial	B	236.04	0.02	92	2.2
Roads	B		0.03	98	2.7
Low Density Residential	B	0.00	0.00	74	0.0
		Total Area (Ha):	***0.05 Ha***		
			Total Area * CN=		***5***
			Weighted CN (II)		***95***
			CN (AMC III)		***98***

T_{imp}	Timp *Area
0.85	0.00
0.85	0.02
0.90	0.03
0.50	0.00
	0.05
Avg T_{imp}	***0.88***

X_{imp}	Ximp *Area
0.85	0.00
0.85	0.02
0.90	0.03
0.25	0.00
	0.05
Avg X_{imp}	***0.88***

C	C *Area
0.90	0.00
0.90	0.02
0.90	0.03
0.45	0.00
	0.05
Avg C	***0.90***

FFS

Subcatchment 1101

Landuse	HSG	Area (m^2)	Area (Ha)	CN	CN *Area
Commercial	B	1659.452	0.165945	92	15.3
Roads	B		0.018141	98	1.8
Low Density Residential	B	67.47176	0.006747	74	0.5
		Total Area (Ha):	***0.19 Ha***		
			Total Area * CN=		***18***
			Weighted CN (II)		***92***
			CN (AMC III)		***97***

T_{imp}	Timp *Area
0.85	0.14
0.90	0.02
0.50	0.00
	0.16
Avg T_{imp}	***0.84***

X_{imp}	Ximp *Area
0.85	0.14
0.90	0.02
0.25	0.00
	0.16
Avg X_{imp}	***0.83***

C	C *Area
0.90	0.15
0.90	0.02
0.45	0.00
	0.17
Avg C	***0.88***

FFS

Subcatchment 1200

Landuse	HSG	Area (m^2)	Area (Ha)	CN	CN *Area
Commercial	B	963.02	0.10	92	8.9
Roads	B		0.13	98	12.6
Commercial	B	144.35	0.01	92	1.3
		Total Area (Ha):	***0.24 Ha***		
			Total Area * CN=		***23***
			Weighted CN (II)		***95***
			CN (AMC III)		***98***

T_{imp}	Timp *Area
0.85	0.08
0.90	0.12
0.85	0.01
	0.21
Avg T_{imp}	***0.88***

X_{imp}	Ximp *Area
0.85	0.08
0.90	0.12
0.85	0.01
	0.21
Avg X_{imp}	***0.88***

C	C *Area
0.90	0.09
0.90	0.12
0.90	0.01
	0.22
Avg C	***0.90***

FFS

Subcatchment 1201

Landuse	HSG	Area (m^2)	Area (Ha)	CN	CN *Area
Commercial	B	2681.04	0.27	92	24.7
Low Density Residential	B	365.15	0.04	74	2.7
Roads	B		0.01	98	1.0
Low Density Residential	B	36.73	0.00	74	0.3
		Total Area (Ha):	***0.32 Ha***		
			Total Area * CN=		***29***
			Weighted CN (II)		***90***
			CN (AMC III)		***96***

T_{imp}	Timp *Area
0.85	0.23
0.50	0.02
0.90	0.01
0.50	0.00
	0.26
Avg T_{imp}	***0.81***

X_{imp}	Ximp *Area
0.85	0.23
0.25	0.01
0.90	0.01
0.25	0.00
	0.25
Avg X_{imp}	***0.78***

C	C *Area
0.90	0.24
0.45	0.02
0.90	0.01
0.45	0.00
	0.27
Avg C	***0.84***

FFS

Subcatchment 1300

Landuse	HSG	Area (m^2)	Area (Ha)	CN	CN *Area
Roads	B		0.031374	98	3.1
Commercial	B	260.0451	0.026005	92	2.4

Total Area (Ha): ***0.06 Ha***

Total Area * CN= ***5***

Weighted CN (II) ***95***

CN (AMC III) ***98***

T_{imp}	Timp *Area
0.90	0.03
0.85	0.02
	0.05
Avg T_{imp}	***0.88***

X_{imp}	Ximp *Area
0.90	0.03
0.85	0.02
	0.05
Avg X_{imp}	***0.88***

C	C *Area
0.90	0.03
0.90	0.02
	0.05
Avg C	***0.90***

FFS

Subcatchment 1400

Landuse	HSG	Area (m^2)	Area (Ha)	CN	CN *Area
Commercial	B	286.1056967	0.028611	92	2.6
Roads	B		0.034321	98	3.4
		Total Area (Ha):	***0.06 Ha***		
			Total Area * CN=		***6***
			Weighted CN (II)		***95***
			CN (AMC III)		***98***

T_{imp}	Timp *Area
0.85	0.02
0.90	0.03
	0.06
Avg T_{imp}	***0.88***

X_{imp}	Ximp *Area
0.85	0.02
0.90	0.03
	0.06
Avg X_{imp}	***0.88***

C	C *Area
0.90	0.03
0.90	0.03
	0.06
Avg C	***0.90***

FFS

Subcatchment 1500

Landuse	HSG	Area (m^2)	Area (Ha)	CN	CN *Area
Commercial	B	447.97	0.04	92	4.1
Roads	B		0.06	98	5.9
Low Density Residential	D	62.92	0.01	87	0.5
Low Density Residential	B	36.17	0.00	74	0.3
		Total Area (Ha):	***0.11 Ha***		
			Total Area * CN=		***11***
			Weighted CN (II)		***94***
			CN (AMC III)		***98***

T_{imp}	Timp *Area
0.85	0.04
0.90	0.05
0.50	0.00
0.50	0.00
	0.10
Avg T_{imp}	***0.85***

X_{imp}	Ximp *Area
0.85	0.04
0.90	0.05
0.25	0.00
0.25	0.00
	0.09
Avg X_{imp}	***0.82***

C	C *Area
0.90	0.04
0.90	0.05
0.45	0.00
0.45	0.00
	0.10
Avg C	***0.86***

FFS

Subcatchment 1501

Landuse	HSG	Area (m^2)	Area (Ha)	CN	CN *Area
Institutional	B	1766.78	0.18	92	16.3
Commercial	B	1220.77	0.12	92	11.2
Roads	B		0.00	98	0.1
Low Density Residential	B	2544.92	0.25	74	18.8
Low Density Residential	B	38.15	0.00	74	0.3
		Total Area (Ha):	***0.56 Ha***		
			Total Area * CN=		***47***
			Weighted CN (II)		***84***
			CN (AMC III)		***93***

T_{imp}	Timp *Area
0.90	0.16
0.85	0.10
0.90	0.00
0.50	0.13
0.50	0.00
	0.39
Avg T_{imp}	***0.70***

X_{imp}	Ximp *Area
0.30	0.05
0.85	0.10
0.90	0.00
0.25	0.06
0.25	0.00
	0.22
Avg X_{imp}	***0.40***

C	C *Area
1.00	0.18
0.90	0.11
0.90	0.00
0.45	0.11
0.45	0.00
	0.40
Avg C	***0.72***

FFS

Subcatchment 1600

Landuse	HSG	Area (m^2)	Area (Ha)	CN	CN *Area
Commercial	B	629.23	0.06	92	5.8
Roads	B		0.08	98	7.9
Low Density Residential	B	22.31	0.00	74	0.2
Low Density Residential	B	51.25	0.01	74	0.4
		Total Area (Ha):	***0.15 Ha***		
			Total Area * CN=		***14***
			Weighted CN (II)		***94***
			CN (AMC III)		***98***

T_{imp}	Timp *Area
0.85	0.05
0.90	0.07
0.50	0.00
0.50	0.00
	0.13
Avg T_{imp}	***0.86***

X_{imp}	Ximp *Area
0.85	0.05
0.90	0.07
0.25	0.00
0.25	0.00
	0.13
Avg X_{imp}	***0.85***

C	C *Area
0.90	0.06
0.90	0.07
0.45	0.00
0.45	0.00
	0.13
Avg C	***0.88***

FFS

Subcatchment 1601

Landuse	HSG	Area (m^2)	Area (Ha)	CN	CN *Area
Institutioal	B	387.92	0.04	92	3.6
Roads	B	0.12	98	11.9	
Low Density Residential	B	366.64	0.04	74	2.7
Low Density Residential	B	617.98	0.06	74	4.6
		Total Area (Ha):	***0.26 Ha***		
			Total Area * CN=		***23***
			Weighted CN (II)		***88***
			CN (AMC III)		***95***

T_{imp}	Timp *Area
0.90	0.03
0.90	0.11
0.50	0.02
0.50	0.03
	0.19
Avg T_{imp}	***0.75***

X_{imp}	Ximp *Area
0.30	0.01
0.90	0.11
0.25	0.01
0.25	0.02
	0.15
Avg X_{imp}	***0.56***

C	C *Area
1.00	0.04
0.90	0.11
0.45	0.02
0.45	0.03
	0.19
Avg C	***0.74***

FFS

Subcatchment 1700

Landuse	HSG	Area (m^2)	Area (Ha)	CN	CN *Area
Commercial	B	469.55	0.05	92	4.3
Roads	B		0.07	98	6.4
Environmental Protection	B	102.34	0.01	73	0.7
		Total Area (Ha):	***0.12 Ha***		
			Total Area * CN=		***11***
			Weighted CN (II)		***94***
			CN (AMC III)		***98***

T_{imp}	Timp *Area
0.85	0.04
0.90	0.06
0.55	0.01
	0.10
Avg T_{imp}	***0.85***

X_{imp}	Ximp *Area
0.85	0.04
0.90	0.06
0.00	0.00
	0.10
Avg X_{imp}	***0.81***

C	C *Area
0.90	0.04
0.90	0.06
0.32	0.00
	0.10
Avg C	***0.85***

FFS

Subcatchment 1701

Landuse	HSG	Area (m^2)	Area (Ha)	CN	CN *Area
Parks and Open Space	B	14.99	0.00	69	0.1
Roads	B		0.01	98	1.2
Low Density Residential	B	1661.58	0.17	74	12.3
Low Density Residential	B	1752.37	0.18	74	13.0
Low Density Residential	B	55.57	0.01	74	0.4
Low Density Residential	B	189.59	0.02	74	1.4
		Total Area (Ha):	***0.38 Ha***		
			Total Area * CN=		***28***
			Weighted CN (II)		***75***
			CN (AMC III)		***88***

T_{imp}	Timp *Area
0.00	0.00
0.90	0.01
0.50	0.08
0.50	0.09
0.50	0.00
0.50	0.01
	0.19
Avg T_{imp}	***0.51***

X_{imp}	Ximp *Area
0.00	0.00
0.90	0.01
0.25	0.04
0.25	0.04
0.25	0.00
0.25	0.00
	0.10
Avg X_{imp}	***0.27***

C	C *Area
0.25	0.00
0.90	0.01
0.45	0.07
0.45	0.08
0.45	0.00
0.45	0.01
	0.18
Avg C	***0.46***

FFS

Subcatchment 1702

Landuse	HSG	Area (m^2)	Area (Ha)	CN	CN *Area
Commercial	B	673.93	0.07	92	6.2
Roads	B		0.00	98	0.0
Environmental Protection	B	38.53	0.00	73	0.3
		Total Area (Ha):	***0.07 Ha***		
			Total Area * CN=		***6***
			Weighted CN (II)		***91***
			CN (AMC III)		***97***

T_{imp}	Timp *Area
0.85	0.06
0.90	0.00
0.55	0.00
	0.06
Avg T_{imp}	***0.83***

X_{imp}	Ximp *Area
0.85	0.06
0.90	0.00
0.00	0.00
	0.06
Avg X_{imp}	***0.80***

C	C *Area
0.90	0.06
0.90	0.00
0.32	0.00
	0.06
Avg C	***0.87***

FFS

Subcatchment 1800

Landuse	HSG	Area (m^2)	Area (Ha)	CN	CN *Area
Commercial	B	161.18	0.02	92	1.5
Roads	B		0.13	98	12.6
		Total Area (Ha):	***0.14 Ha***		
			Total Area * CN=		***14***
			Weighted CN (II)		***97***
			CN (AMC III)		***99***

T_{imp}	Timp *Area
0.85	0.01
0.90	0.12
	0.13
Avg T_{imp}	***0.89***

X_{imp}	Ximp *Area
0.85	0.01
0.90	0.12
	0.13
Avg X_{imp}	***0.89***

C	C *Area
0.90	0.01
0.90	0.12
	0.13
Avg C	***0.90***

FFS

Subcatchment 1801

Landuse	HSG	Area (m^2)	Area (Ha)	CN	CN *Area
Commercial	B	1274.90	0.13	92	11.7
Low Density Residential	B	16.52	0.00	74	0.1
Low Density Residential	B	27.25	0.00	74	0.2
		Total Area (Ha):	***0.13 Ha***		
			Total Area * CN=		***12***
			Weighted CN (II)		***91***
			CN (AMC III)		***97***

T_{imp}	Timp *Area
0.85	0.11
0.50	0.00
0.50	0.00
	0.11
Avg T_{imp}	***0.84***

X_{imp}	Ximp *Area
0.85	0.11
0.25	0.00
0.25	0.00
	0.11
Avg X_{imp}	***0.83***

C	C *Area
0.90	0.11
0.45	0.00
0.45	0.00
	0.12
Avg C	***0.89***

FFS

Subcatchment 1802

Landuse	HSG	Area (m^2)	Area (Ha)	CN	CN *Area
Commercial	B	10.34	0.00	92	0.1
Low Density Residential	B	2171.36	0.22	74	16.1
Low Density Residential	B	872.75	0.09	74	6.5
Roads	B		0.14	98	13.7
		Total Area (Ha):	***0.45 Ha***		
			Total Area * CN=		***36***
			Weighted CN (II)		***82***
			CN (AMC III)		***92***

T_{imp}	Timp *Area
0.85	0.00
0.50	0.11
0.50	0.04
0.90	0.13
	0.28
Avg T_{imp}	***0.63***

X_{imp}	Ximp *Area
0.85	0.00
0.25	0.05
0.25	0.02
0.90	0.13
	0.20
Avg X_{imp}	***0.46***

C	C *Area
0.90	0.00
0.45	0.10
0.45	0.04
0.90	0.13
	0.26
Avg C	***0.59***

FFS

Subcatchment 1900

Landuse	HSG	Area (m^2)	Area (Ha)	CN	CN *Area
Commercial	B	4.24	0.00	92	0.0
Low Density Residential	B	1.31	0.00	74	0.0
Low Density Residential	B	11.35	0.00	74	0.1
Roads	B		0.05	98	4.5
		Total Area (Ha):	***0.05 Ha***		
			Total Area * CN=		***5***
			Weighted CN (II)		***97***
			CN (AMC III)		***99***

T_{imp}	Timp *Area
0.85	0.00
0.50	0.00
0.50	0.00
0.90	0.04
	0.04
Avg T_{imp}	***0.89***

X_{imp}	Ximp *Area
0.85	0.00
0.25	0.00
0.25	0.00
0.90	0.04
	0.04
Avg X_{imp}	***0.88***

C	C *Area
0.90	0.00
0.45	0.00
0.45	0.00
0.90	0.04
	0.04
Avg C	***0.89***

FFS

Subcatchment 1901

Landuse	HSG	Area (m^2)	Area (Ha)	CN	CN *Area
Parks and Open Space	B	512.70	0.05	69	3.5
Low Density Residential	B	108.07	0.01	74	0.8
Low Density Residential	B	2.33	0.00	74	0.0
Roads	B		0.00	98	0.5
		Total Area (Ha):	***0.07 Ha***		
			Total Area * CN=		***5***
			Weighted CN (II)		***72***
			CN (AMC III)		***86***

T_{imp}	Timp *Area
0.00	0.00
0.50	0.01
0.50	0.00
0.90	0.00
	0.01
Avg T_{imp}	***0.15***

X_{imp}	Ximp *Area
0.00	0.00
0.25	0.00
0.25	0.00
0.90	0.00
	0.01
Avg X_{imp}	***0.10***

C	C *Area
0.25	0.01
0.45	0.00
0.45	0.00
0.90	0.00
	0.02
Avg C	***0.33***

FFS

Subcatchment 1902

Landuse	HSG	Area (m^2)	Area (Ha)	CN	CN *Area
Low Density Residential	B	4693.72	0.47	74	34.7
Low Density Residential	B	11736.35	1.17	74	86.8
Low Density Residential	B	8378.93	0.84	74	62.0
Roads	B		0.24	98	23.3
Commercial	B	2519.12	0.25	92	23.2
Low Density Residential	B	5415.86	0.54	74	40.1
		Total Area (Ha):	***3.51 Ha***		
			Total Area * CN=		***270***
			Weighted CN (II)		***77***
			CN (AMC III)		***89***

T_{imp}	Timp *Area
0.50	0.23
0.50	0.59
0.50	0.42
0.90	0.21
0.85	0.21
0.50	0.27
	1.94
Avg T_{imp}	***0.55***

X_{imp}	Ximp *Area
0.25	0.12
0.25	0.29
0.25	0.21
0.90	0.21
0.85	0.21
0.25	0.14
	1.18
Avg X_{imp}	***0.34***

C	C *Area
0.45	0.21
0.45	0.53
0.45	0.38
0.90	0.21
0.90	0.23
0.45	0.24
	1.80
Avg C	***0.51***

FFS

Subcatchment 2000

Landuse	HSG	Area (m^2)	Area (Ha)	CN	CN *Area
Low Density Residential	B	3.50	0.00	74	0.0
Low Density Residential	B	0.82	0.00	74	0.0
Roads	B		0.04	98	3.8
		Total Area (Ha):	***0.04 Ha***		
			Total Area * CN=		***4***
			Weighted CN (II)		***98***
			CN (AMC III)		***99***

T_{imp}	Timp *Area
0.50	0.00
0.50	0.00
0.90	0.04
	0.04
Avg T_{imp}	***0.90***

X_{imp}	Ximp *Area
0.25	0.00
0.25	0.00
0.90	0.04
	0.04
Avg X_{imp}	***0.89***

C	C *Area
0.45	0.00
0.45	0.00
0.90	0.04
	0.04
Avg C	***0.90***

FFS

Subcatchment 2001

Landuse	HSG	Area (m^2)	Area (Ha)	CN	CN *Area
Parks and Open Space	B	395.80	0.04	69	2.7
Low Density Residential	B	1.07	0.00	74	0.0
Roads	B		0.00	98	0.1
		Total Area (Ha):	***0.04 Ha***		
			Total Area * CN=		***3***
			Weighted CN (II)		***70***
			CN (AMC III)		***85***

T_{imp}	Timp *Area
0.00	0.00
0.50	0.00
0.90	0.00
	0.00
Avg T_{imp}	***0.02***

X_{imp}	Ximp *Area
0.00	0.00
0.25	0.00
0.90	0.00
	0.00
Avg X_{imp}	***0.02***

C	C *Area
0.25	0.01
0.45	0.00
0.90	0.00
	0.01
Avg C	***0.26***

FFS

Subcatchment 2100

Landuse	HSG	Area (m^2)	Area (Ha)	CN	CN *Area
Parks and Open Space	B	3.42	0.00	69	0.0
Low Density Residential	B	1.00	0.00	74	0.0
Low Density Residential	B	1.72	0.00	74	0.0
Roads	B		0.05	98	5.1
		Total Area (Ha):	***0.05 Ha***		
			Total Area * CN=		***5***
			Weighted CN (II)		***98***
			CN (AMC III)		***99***

T_{imp}	Timp *Area
0.00	0.00
0.50	0.00
0.50	0.00
0.90	0.05
	0.05
Avg T_{imp}	***0.89***

X_{imp}	Ximp *Area
0.00	0.00
0.25	0.00
0.25	0.00
0.90	0.05
	0.05
Avg X_{imp}	***0.89***

C	C *Area
0.25	0.00
0.45	0.00
0.45	0.00
0.90	0.05
	0.05
Avg C	***0.89***

FFS

Subcatchment 2101

Landuse	HSG	Area (m^2)	Area (Ha)	CN	CN *Area
Parks and Open Space	B	366.92	0.04	69	2.5
Low Density Residential	B	0.18	0.00	74	0.0
Roads	B		0.00	98	0.0
		Total Area (Ha):	***0.04 Ha***		
			Total Area * CN=		***3***
			Weighted CN (II)		***69***
			CN (AMC III)		***84***

T_{imp}	Timp *Area
0.00	0.00
0.50	0.00
0.90	0.00
	0.00
Avg T_{imp}	***0.00***

X_{imp}	Ximp *Area
0.00	0.00
0.25	0.00
0.90	0.00
	0.00
Avg X_{imp}	***0.00***

C	C *Area
0.25	0.01
0.45	0.00
0.90	0.00
	0.01
Avg C	***0.25***

FFS

Subcatchment 2200

Landuse	HSG	Area (m^2)	Area (Ha)	CN	CN *Area
Parks and Open Space	B	52.92	0.01	69	0.4
Low Density Residential	B	0.71	0.00	74	0.0
Low Density Residential	B	3.98	0.00	74	0.0
Roads	B		0.11	98	10.7
		Total Area (Ha):	***0.11 Ha***		
			Total Area * CN=		***11***
			Weighted CN (II)		***97***
			CN (AMC III)		***99***

T_{imp}	Timp *Area
0.00	0.00
0.50	0.00
0.50	0.00
0.90	0.10
	0.10
Avg T_{imp}	***0.86***

X_{imp}	Ximp *Area
0.00	0.00
0.25	0.00
0.25	0.00
0.90	0.10
	0.10
Avg X_{imp}	***0.86***

C	C *Area
0.25	0.00
0.45	0.00
0.45	0.00
0.90	0.10
	0.10
Avg C	***0.87***

FFS

Subcatchment 2201

Landuse	HSG	Area (m^2)	Area (Ha)	CN	CN *Area
Institutional	B	1658.77	0.17	92	15.3
Woods	B	993.17	0.10	60	6.0
Parks and Open Space	B	5046.55	0.50	69	34.8
Industrial	B	3680.01	0.37	88	32.4
Low Density Residential	B	2060.11	0.21	74	15.2
Low Density Residential	B	1949.43	0.19	74	14.4
		Total Area (Ha):	***1.54 Ha***		
			Total Area * CN=		***118***
			Weighted CN (II)		***77***
			CN (AMC III)		***89***

T_{imp}	Timp *Area
0.90	0.15
0.00	0.00
0.00	0.00
0.90	0.33
0.50	0.10
0.50	0.10
	0.68
Avg T_{imp}	***0.44***

X_{imp}	Ximp *Area
0.30	0.05
0.00	0.00
0.00	0.00
0.75	0.28
0.25	0.05
0.25	0.05
	0.43
Avg X_{imp}	***0.28***

C	C *Area
1.00	0.17
0.25	0.02
0.25	0.13
0.90	0.33
0.45	0.09
0.45	0.09
	0.83
Avg C	***0.54***

FFS

Subcatchment 2202

Landuse	HSG	Area (m^2)	Area (Ha)	CN	CN *Area
Woods	B	47.81	0.00	60	0.3
Parks and Open Space	B	54.00	0.01	69	0.4
Low Density Residential	B	61.28	0.01	74	0.5
Low Density Residential	B	3.33	0.00	74	0.0
Roads	B		0.14	98	14.1
		Total Area (Ha):	***0.16 Ha***		
			Total Area * CN=		***15***
			Weighted CN (II)		***95***
			CN (AMC III)		***98***

T_{imp}	Timp *Area
0.00	0.00
0.00	0.00
0.50	0.00
0.50	0.00
0.90	0.13
	0.13
Avg T_{imp}	***0.83***

X_{imp}	Ximp *Area
0.00	0.00
0.00	0.00
0.25	0.00
0.25	0.00
0.90	0.13
	0.13
Avg X_{imp}	***0.82***

C	C *Area
0.25	0.00
0.25	0.00
0.45	0.00
0.45	0.00
0.90	0.13
	0.14
Avg C	***0.84***

FFS

Subcatchment 2203

Landuse	HSG	Area (m^2)	Area (Ha)	CN	CN *Area
Low Density Residential	B	90.40	0.01	74	0.7
Low Density Residential	B	16.29	0.00	74	0.1
Roads	B		0.16	98	15.7
		Total Area (Ha):	***0.17 Ha***		
			Total Area * CN=		***17***
			Weighted CN (II)		***97***
			CN (AMC III)		***99***

T_{imp}	Timp *Area
0.50	0.00
0.50	0.00
0.90	0.14
	0.15
Avg T_{imp}	***0.88***

X_{imp}	Ximp *Area
0.25	0.00
0.25	0.00
0.90	0.14
	0.15
Avg X_{imp}	***0.86***

C	C *Area
0.45	0.00
0.45	0.00
0.90	0.14
	0.15
Avg C	***0.87***

FFS

Subcatchment 2204

Landuse	HSG	Area (m^2)	Area (Ha)	CN	CN *Area
Agricultural	B	61117.06	6.11	75	458.4
Institutional	B	7495.55	0.75	92	69.0
Woods	B	11106.57	1.11	60	66.6
Meadow	B	3535.73	0.35	66	23.3
Industrial	B	1055.30	0.11	88	9.3
Low Density Residential	B	24270.12	2.43	74	179.6
Commercial	B	3331.38	0.33	92	30.6
Low Density Residential	B	419.91	0.04	74	3.1
Roads	B		0.08	98	8.0
		Total Area (Ha):	***11.31 Ha***		
			Total Area * CN=		***848***
			Weighted CN (II)		***75***
			CN (AMC III)		***88***

T_{imp}	Timp *Area
0.01	0.06
0.90	0.67
0.00	0.00
0.01	0.00
0.90	0.09
0.50	1.21
0.85	0.28
0.50	0.02
0.90	0.07
	2.43
Avg T_{imp}	***0.21***

X_{imp}	Ximp *Area
0.01	0.06
0.30	0.22
0.00	0.00
0.01	0.00
0.75	0.08
0.25	0.61
0.85	0.28
0.25	0.01
0.90	0.07
	1.34
Avg X_{imp}	***0.12***

C	C *Area
0.35	2.14
1.00	0.75
0.25	0.28
0.28	0.10
0.90	0.09
0.45	1.09
0.90	0.30
0.45	0.02
0.90	0.07
	4.84
Avg C	***0.43***

FFS

Subcatchment 2205

Landuse	HSG	Area (m^2)	Area (Ha)	CN	CN *Area
Commercial	B	2338.06	0.23	92	21.5
Commercial	B	837.14	0.08	92	7.7
Low Density Residential	B	492.35	0.05	74	3.6
Commercial	B	3804.54	0.38	92	35.0
Low Density Residential	B	28.54	0.00	74	0.2
Roads	B		0.08	98	8.1
		Total Area (Ha):	***0.83 Ha***		
			Total Area * CN=		***76***
			Weighted CN (II)		***91***
			CN (AMC III)		***97***

T_{imp}	Timp *Area
0.85	0.20
0.85	0.07
0.50	0.02
0.85	0.32
0.50	0.00
0.90	0.07
	0.69
Avg T_{imp}	***0.83***

X_{imp}	Ximp *Area
0.85	0.20
0.85	0.07
0.25	0.01
0.85	0.32
0.25	0.00
0.90	0.07
	0.68
Avg X_{imp}	***0.82***

C	C *Area
0.90	0.21
0.90	0.08
0.45	0.02
0.90	0.34
0.45	0.00
0.90	0.07
	0.73
Avg C	***0.87***

FFS

Subcatchment 2206

Landuse	HSG	Area (m^2)	Area (Ha)	CN	CN *Area
Low Density Residential	B	0.01	0.00	74	0.0
Roads	B		0.33	98	32.7

T_{imp}	Timp *Area
0.50	0.00
0.90	0.30
	0.30
Avg T_{imp}	***0.90***

X_{imp}	Ximp *Area
0.25	0.00
0.90	0.30
	0.30
Avg X_{imp}	***0.90***

C	C *Area
0.45	0.00
0.90	0.30
	0.30
Avg C	***0.90***

Total Area (Ha): ***0.33 Ha***

Total Area * CN= ***33***

Weighted CN (II) ***98***

CN (AMC III) ***99***

FFS

Subcatchment 2207

Landuse	HSG	Area (m^2)	Area (Ha)	CN	CN *Area
Commercial	B	32.04	0.00	92	0.3
Low Density Residential	B	941.31	0.09	74	7.0
Roads	B		0.00	98	0.1
		Total Area (Ha):	***0.10 Ha***		
			Total Area * CN=		***7***
			Weighted CN (II)		***75***
			CN (AMC III)		***88***

T_{imp}	Timp *Area
0.85	0.00
0.50	0.05
0.90	0.00
	0.05
Avg T_{imp}	***0.52***

X_{imp}	Ximp *Area
0.85	0.00
0.25	0.02
0.90	0.00
	0.03
Avg X_{imp}	***0.28***

C	C *Area
0.90	0.00
0.45	0.04
0.90	0.00
	0.05
Avg C	***0.47***

FFS

Subcatchment 2300

Landuse	HSG	Area (m^2)	Area (Ha)	CN	CN *Area
Parks and Open Space	B	2289.557	0.23	69	15.8
Roads	B		0.00	98	0.0
		Total Area (Ha):	***0.23 Ha***		
			Total Area * CN=		***16***
			Weighted CN (II)		***69***
			CN (AMC III)		***84***

T_{imp}	Timp *Area
0.00	0.00
0.90	0.00
	0.00
Avg T_{imp}	***0.00***

X_{imp}	Ximp *Area
0.00	0.00
0.90	0.00
	0.00
Avg X_{imp}	***0.00***

C	C *Area
0.25	0.06
0.90	0.00
	0.06
Avg C	***0.25***

FFS

Subcatchment 2400

Landuse	HSG	Area (m^2)	Area (Ha)	CN	CN *Area
Institutional	B	275.03	0.03	92	2.5
Parks and Open Space	B	9174.04	0.92	69	63.3
Parks and Open Space	B	3698.68	0.37	69	25.5
Low Density Residential	B	5158.07	0.52	74	38.2
Low Density Residential	B	186.01	0.02	74	1.4
Low Density Residential	B	1710.09	0.17	74	12.7
Low Density Residential	B	3571.11	0.36	74	26.4
Roads	B		0.09	98	9.3
		Total Area (Ha):	***2.47 Ha***		
			Total Area * CN=		***179***
			Weighted CN (II)		***73***

T_{imp}	Timp *Area
0.90	0.02
0.00	0.00
0.00	0.00
0.50	0.26
0.50	0.01
0.50	0.09
0.50	0.18
0.90	0.09
	0.64
Avg T_{imp}	***0.26***

X_{imp}	Ximp *Area
0.30	0.01
0.00	0.00
0.00	0.00
0.25	0.13
0.25	0.00
0.25	0.04
0.25	0.09
0.90	0.09
	0.36
Avg X_{imp}	***0.15***

C	C *Area
1.00	0.03
0.25	0.23
0.25	0.09
0.45	0.23
0.45	0.01
0.45	0.08
0.45	0.16
0.90	0.09
	0.91
Avg C	***0.37***

FFS

Subcatchment 2401

Landuse	HSG	Area (m^2)	Area (Ha)	CN	CN *Area	T_{imp}	Timp *Area	X_{imp}	Ximp *Area	C	C *Area
Agricultural	B	411.36	0.04	75	3.1	0.01	0.00	0.01	0.00	0.35	0.01
Institutional	B	39979.17	4.00	92	367.8	0.90	3.60	0.30	1.20	1.00	4.00
Woods	B	157.74	0.02	60	0.9	0.00	0.00	0.00	0.00	0.25	0.00
Meadow	B	129.91	0.01	66	0.9	0.01	0.00	0.01	0.00	0.28	0.00
Parks and Open Space	B	816.11	0.08	69	5.6	0.00	0.00	0.00	0.00	0.25	0.02
Low Density Residential	B	1.67	0.00	74	0.0	0.50	0.00	0.25	0.00	0.45	0.00
Industrial	B	12.71	0.00	88	0.1	0.90	0.00	0.75	0.00	0.90	0.00
Low Density Residential	B	201.45	0.02	74	1.5	0.50	0.01	0.25	0.01	0.45	0.01
Roads	B		0.00	98	0.0	0.90	0.00	0.90	0.00	0.90	0.00
							3.61		1.21		4.05
		Total Area (Ha):	***4.17 Ha***								
			Total Area * CN=		***380***	***Avg T_{imp}***	***0.87***	***Avg X_{imp}***	***0.29***	***Avg C***	***0.97***
			Weighted CN (II)		***91***						
			CN (AMC III)		***97***						

FFS

Subcatchment 2500

Landuse	HSG	Area (m^2)	Area (Ha)	CN	CN *Area
Agricultural	B	12027.53	1.20	75	90.2
Institutional	B	5766.53	0.58	92	53.1
Commercial	B	744.15	0.07	92	6.8
Commercial	B	600.30	0.06	92	5.5
Woods	B	105.04	0.01	60	0.6
Commercial	B	3883.26	0.39	92	35.7
Commercial	B	1709.30	0.17	92	15.7
Meadow	B	3706.27	0.37	66	24.5
Roads	B		0.24	98	23.4
Low Density Residential	B	3054.08	0.31	74	22.6
Low Density Residential	B	5328.76	0.53	74	39.4
Low Density Residential	B	1921.81	0.19	74	14.2
		Total Area (Ha):	***4.12 Ha***		
			Total Area * CN=		***332***
			Weighted CN (II)		***80***
			CN (AMC III)		***91***

T_{imp}	Timp *Area
0.01	0.01
0.90	0.52
0.85	0.06
0.85	0.05
0.00	0.00
0.85	0.33
0.85	0.15
0.01	0.00
0.90	0.21
0.50	0.15
0.50	0.27
0.50	0.10
	1.85
Avg T_{imp}	***0.45***

X_{imp}	Ximp *Area
0.01	0.01
0.30	0.17
0.85	0.06
0.85	0.05
0.00	0.00
0.85	0.33
0.85	0.15
0.01	0.00
0.90	0.21
0.25	0.08
0.25	0.13
0.25	0.05
	1.25
Avg X_{imp}	***0.30***

C	C *Area
0.35	0.42
1.00	0.58
0.90	0.07
0.90	0.05
0.25	0.00
0.90	0.35
0.90	0.15
0.28	0.10
0.90	0.21
0.45	0.14
0.45	0.24
0.45	0.09
	2.41
Avg C	***0.58***

FFS

Subcatchment 2501

Landuse	HSG	Area (m^2)	Area (Ha)	CN	CN *Area
Agricultural	B	20094.05	2.01	75	150.7
Institutional	B	28460.71	2.85	92	261.8
		Total Area (Ha):	***4.86 Ha***		
			Total Area * CN=		***413***
			Weighted CN (II)		***85***
			CN (AMC III)		***94***

T_{imp}	Timp *Area
0.01	0.02
0.90	2.56
	2.58
Avg T_{imp}	***0.53***

X_{imp}	Ximp *Area
0.01	0.02
0.30	0.85
	0.87
Avg X_{imp}	***0.18***

C	C *Area
0.35	0.70
1.00	2.85
	3.55
Avg C	***0.73***

FFS

Subcatchment 2600

Landuse	HSG	Area (m^2)	Area (Ha)	CN	CN *Area
Agricultural	B	18419.31	1.84	75	138.1
Institutional	B	30.75	0.00	92	0.3
Commercial	B	2922.59	0.29	92	26.9
		Total Area (Ha):	***2.14 Ha***		
			Total Area * CN=		***165***
			Weighted CN (II)		***77***
			CN (AMC III)		***89***

T_{imp}	Timp *Area
0.01	0.02
0.90	0.00
0.85	0.25
	0.27
Avg T_{imp}	***0.13***

X_{imp}	Ximp *Area
0.01	0.02
0.30	0.00
0.85	0.25
	0.27
Avg X_{imp}	***0.13***

C	C *Area
0.35	0.64
1.00	0.00
0.90	0.26
	0.91
Avg C	***0.43***

FFS

Subcatchment 2601

Landuse	HSG	Area (m^2)	Area (Ha)	CN	CN *Area
Agricultural	B	183817.44	18.38	75	1378.6
Institutional	B	1276.90	0.13	92	11.7
Industrial	B	21926.14	2.19	88	193.0
		Total Area (Ha):	***20.70 Ha***		
			Total Area * CN=		***1583***
			Weighted CN (II)		***76***
			CN (AMC III)		***89***

T_{imp}	Timp *Area
0.01	0.18
0.90	0.11
0.90	1.97
	2.27
Avg T_{imp}	***0.11***

X_{imp}	Ximp *Area
0.01	0.18
0.30	0.04
0.75	1.64
	1.87
Avg X_{imp}	***0.09***

C	C *Area
0.35	6.43
1.00	0.13
0.90	1.97
	8.53
Avg C	***0.41***

FFS

Subcatchment 2700

Landuse	HSG	Area (m^2)	Area (Ha)	CN	CN *Area
Agricultural	B	42228.52	4.22	75	316.7
Commercial	B	1885.14	0.19	92	17.3
Meadow	B	432.75	0.04	66	2.9
Industrial	B	4375.58	0.57	88	50.6
Low Density Residential	B	98.64	0.01	74	0.7
Low Density Residential	B	8.70	0.00	74	0.1
		Total Area (Ha):	***5.04 Ha***		
			Total Area * CN=		***388***
			Weighted CN (II)		***77***
			CN (AMC III)		***89***

T_{imp}	Timp *Area
0.01	0.04
0.85	0.16
0.01	0.00
0.90	0.52
0.50	0.00
0.50	0.00
	0.73
Avg T_{imp}	***0.14***

X_{imp}	Ximp *Area
0.01	0.04
0.85	0.16
0.01	0.00
0.75	0.43
0.25	0.00
0.25	0.00
	0.64
Avg X_{imp}	***0.13***

C	C *Area
0.35	1.48
0.90	0.17
0.28	0.01
0.90	0.52
0.45	0.00
0.45	0.00
	2.18
Avg C	***0.43***

FFS

Subcatchment 2701

Landuse	HSG	Area (m^2)	Area (Ha)	CN	CN *Area
Agricultural	B	45481.83	4.55	75	341.1
Industrial	B	29.92	0.00	88	0.3
		Total Area (Ha):	***4.55 Ha***		
			Total Area * CN=		***341***
			Weighted CN (II)		***75***
			CN (AMC III)		***88***

T_{imp}	Timp *Area
0.01	0.05
0.90	0.00
	0.05
Avg T_{imp}	***0.01***

X_{imp}	Ximp *Area
0.01	0.05
0.75	0.00
	0.05
Avg X_{imp}	***0.01***

C	C *Area
0.35	1.59
0.90	0.00
	1.59
Avg C	***0.35***

FFS

Subcatchment 2800

Landuse	HSG	Area (m^2)	Area (Ha)	CN	CN *Area
Agricultura	B	168999.75	16.90	75	1267.5

Total Area (Ha): ***16.90 Ha***

Total Area * CN= ***1267***

Weighted CN (II) ***75***

CN (AMC III) ***88***

T_{imp}	Timp *Area
0.01	0.17
	0.17

Avg T_{imp} ***0.01***

X_{imp}	Ximp *Area
0.01	0.17
	0.17

Avg X_{imp} ***0.01***

C	C *Area
0.35	5.91
	5.91

Avg C ***0.35***

FFS

Subcatchment 2900

Landuse	HSG	Area (m^2)	Area (Ha)	CN	CN *Area
Agriculture	B	168539.10	16.85	75	1264.0
Agriculture	B	3754.40	0.38	75	28.2
		Total Area (Ha):	***17.23 Ha***		
			Total Area * CN=		***1292***
			Weighted CN (II)		***75***
			CN (AMC III)		***88***

T_{imp}	Timp *Area
0.01	0.17
0.01	0.00
	0.17
Avg T_{imp}	***0.01***

X_{imp}	Ximp *Area
0.01	0.17
0.01	0.00
	0.17
Avg X_{imp}	***0.01***

C	C *Area
0.35	5.90
0.35	0.13
	6.03
Avg C	***0.35***

Calculation of Subcatchment Slopes				
Id	**Subcatchment**	**Downstream Elevation (m)**	**Length**	**Slope**
1	2300	256.79	73.1	-0.374
2	2400	256.51	136.7	0.152
3	2500	256.72	245.3	0.326
4	2600	257.52	462.9	0.367
5	2700	259.22	403.1	0.883
6	2800	262.78	842.2	1.390
7		274.49		

TpCalculations - Sensitivity Analysis - Tp

Longest Flowpath

Catchment ID	Nashyd/Standhyd	Area (ha)	Travel Length (m)	From	To	Elevation (m) Top	Elevation (m) Bottom	Slope(m/m)	Runoff Coeff	ToC (min)	Tp (hr)
1901		0.07	39.32			256.73	256.28	0.01	0.33	15.09	0.17
2001		0.04	30.02			256.49	256.28	0.01	0.26	16.82	0.19
2101		0.04	28.93			256.76	256.01	0.03	0.25	10.88	0.12
2300		0.23	84.59			257.25	256.46	0.01	0.25	26.07	0.29
2600		2.14	497.13			263.35	257.52	0.01	0.43	25.44	0.28
2601		20.70	1083.91			281.28	259.22	0.02	0.41	39.59	0.44
2700		5.04	664.71			279.05	259.22	0.03	0.43	25.90	0.29
2701		4.55	649.15			280.36	262.78	0.03	0.35	44.82	0.50
2800		16.90	1046.45			281.19	262.78	0.02	0.35	65.64	0.73
2900		17.23	932.94			281.88	274.49	0.01	0.35	80.65	0.90
2201		1.54	238.54			257.88	256.63	0.01		68.55	0.76
2204		11.31	1078.97			269.47	259.45	0.01		120.70	1.34
2400		2.47	267.36			258.55	256.67	0.01		65.86	0.73
2401		4.17	629.16			260.05	256.72	0.01		110.96	1.23
2500		4.12	454.60			261.35	256.72	0.01		76.00	0.84
2501		4.86	537.91			259.53	257.52	0.00		115.09	1.28

NASHYD (Tp used)

STANDHYD (Tp not used)

TpCalculations - Sensitivity Analysis - Flow Length x 1.25

Longest Flowpath

NASHYD (Tp used)

STANDHYD (Tp not used)

Catchment ID	Nashyd/Standhyd	Area (ha)	Travel Length (m)	From	To	Elevation (m) Top	Elevation (m) Bottom	Slope(m/m)	Runoff Coeff	ToC (min)	Tp (hr)
1901		0.07	49.15			256.73	256.28	0.01	0.33	18.16	0.20
2001		0.04	37.525			256.49	256.28	0.01	0.26	20.24	0.22
2101		0.04	36.1625			256.76	256.01	0.02	0.25	13.10	0.15
2300		0.23	105.74			257.25	256.46	0.01	0.25	31.37	0.35
2600		2.14	621.42			263.35	257.52	0.01	0.43	33.25	0.37
2601		20.70	1354.89			281.28	259.22	0.02	0.41	51.74	0.57
2700		5.04	830.89			279.05	259.22	0.02	0.43	33.85	0.38
2701		4.55	811.43			280.36	262.78	0.02	0.35	53.94	0.60
2800		16.90	1308.06			281.19	262.78	0.01	0.35	79.00	0.88
2900		17.23	1166.17			281.88	274.49	0.01	0.35	97.06	1.08
2201		1.54	238.54			257.88	256.63	0.01		68.55	0.76
2204		11.31	1078.97			269.47	259.45	0.01		120.70	1.34
2400		2.47	267.36			258.55	256.67	0.01		65.86	0.73
2401		4.17	629.16			260.05	256.72	0.01		110.96	1.23
2500		4.12	454.60			261.35	256.72	0.01		76.00	0.84
2501		4.86	537.91			259.53	257.52	0.00		115.09	1.28

TpCalculations - Sensitivity Analysis - Flow Length x 0.75

Longest Flowpath

NASHYD (Tp used)

STANDHYD (Tp not used)

Catchment ID	Nashyd/Standhyd	Area (ha)	Travel Length (m)	From	To	Elevation (m) Top	Elevation (m) Bottom	Slope(m/m)	Runoff Coeff	ToC (min)	Tp (hr)
1901		0.07	29.49			256.73	256.28	0.02	0.33	11.88	0.13
2001		0.04	22.515			256.49	256.28	0.01	0.26	13.25	0.15
2101		0.04	21.6975			256.76	256.01	0.03	0.25	8.57	0.10
2300		0.23	63.44			257.25	256.46	0.01	0.25	20.53	0.23
2600		2.14	372.85			263.35	257.52	0.02	0.43	18.01	0.20
2601		20.70	812.93			281.28	259.22	0.03	0.41	28.03	0.31
2700		5.04	498.53			279.05	259.22	0.04	0.43	18.34	0.20
2701		4.55	486.86			280.36	262.78	0.04	0.35	35.30	0.39
2800		16.90	784.84			281.19	262.78	0.02	0.35	51.70	0.57
2900		17.23	699.70			281.88	274.49	0.01	0.35	63.52	0.71
2201		1.54	238.54			257.88	256.63	0.01		68.55	0.76
2204		11.31	1078.97			269.47	259.45	0.01		120.70	1.34
2400		2.47	267.36			258.55	256.67	0.01		65.86	0.73
2401		4.17	629.16			260.05	256.72	0.01		110.96	1.23
2500		4.12	454.60			261.35	256.72	0.01		76.00	0.84
2501		4.86	537.91			259.53	257.52	0.00		115.09	1.28

TpCalculations - Sensitivity Analysis - Slope x 1.25

Longest Flowpath	Catchment ID	Nashyd/Standhyd	Area (ha)	Travel Length (m)	From	To	Elevation (m) Top	Elevation (m) Bottom	Slope(m/m)	Runoff Coeff	ToC (min)	Tp (hr)
	1901		0.07	39.32			256.73	256.28	0.01	0.33	14.02	0.16
	2001		0.04	30.02			256.49	256.28	0.01	0.26	15.63	0.17
	2101		0.04	28.93			256.76	256.01	0.03	0.25	10.11	0.11
	2300		0.23	84.59			257.25	256.46	0.01	0.25	24.22	0.27
NASHYD (Tp used)	2600		2.14	497.13			263.35	257.52	0.01	0.43	24.33	0.27
	2601		20.70	1083.91			281.28	259.22	0.03	0.41	37.86	0.42
	2700		5.04	664.71			279.05	259.22	0.04	0.43	24.77	0.28
	2701		4.55	649.15			280.36	262.78	0.03	0.35	41.64	0.46
	2800		16.90	1046.45			281.19	262.78	0.02	0.35	60.98	0.68
	2900		17.23	932.94			281.88	274.49	0.01	0.35	74.92	0.83
	2201		1.54	238.54			257.88	256.63	0.01		68.55	0.76
	2204		11.31	1078.97			269.47	259.45	0.01		120.70	1.34
STANDHYD (Tp not used)	2400		2.47	267.36			258.55	256.67	0.01		65.86	0.73
	2401		4.17	629.16			260.05	256.72	0.01		110.96	1.23
	2500		4.12	454.60			261.35	256.72	0.01		76.00	0.84
	2501		4.86	537.91			259.53	257.52	0.00		115.09	1.28

TpCalculations - Sensitivity Analysis - Slope x 0.75

Longest Flowpath

NASHYD (Tp used)

STANDHYD (Tp not used)

Catchment ID	Nashyd/Standhyd	Area (ha)	Travel Length (m)	From	To	Elevation (m) Top	Elevation (m) Bottom	Slope(m/m)	Runoff Coeff	ToC (min)	Tp (hr)
1901		0.07	39.32			256.73	256.28	0.01	0.33	16.59	0.18
2001		0.04	30.02			256.49	256.28	0.01	0.26	18.50	0.21
2101		0.04	28.93			256.76	256.01	0.02	0.25	11.96	0.13
2300		0.23	84.59			257.25	256.46	0.01	0.25	28.66	0.32
2600		2.14	497.13			263.35	257.52	0.01	0.43	26.95	0.30
2601		20.70	1083.91			281.28	259.22	0.02	0.41	41.93	0.47
2700		5.04	664.71			279.05	259.22	0.02	0.43	27.44	0.30
2701		4.55	649.15			280.36	262.78	0.02	0.35	49.28	0.55
2800		16.90	1046.45			281.19	262.78	0.01	0.35	72.18	0.80
2900		17.23	932.94			281.88	274.49	0.01	0.35	88.68	0.99
2201		1.54	238.54			257.88	256.63	0.01		68.55	0.76
2204		11.31	1078.97			269.47	259.45	0.01		120.70	1.34
2400		2.47	267.36			258.55	256.67	0.01		65.86	0.73
2401		4.17	629.16			260.05	256.72	0.01		110.96	1.23
2500		4.12	454.60			261.35	256.72	0.01		76.00	0.84
2501		4.86	537.91			259.53	257.52	0.00		115.09	1.28

Longest Flowpath	Catchment ID		Area (ha)	Travel Length (m)	From	To	Elevation (m)		Slope(m/m)	Runoff Coeff	ToC (min)	Tp (hr)
		Nashyd/Standhyd					Top	Bottom				
NASHYD (Tp used)	1901		0.07	39.32			256.73	256.28	0.01	0.33	15.09	0.17
	2001		0.04	30.02			256.49	256.28	0.01	0.26	16.82	0.19
	2101		0.04	28.93			256.76	256.01	0.03	0.25	10.88	0.12
	2300		0.23	84.59			257.25	256.46	0.01	0.25	26.07	0.29
	2600		2.14	497.13			263.35	257.52	0.01	0.43	25.44	0.28
	2601		20.70	1083.91			281.28	259.22	0.02	0.41	39.59	0.44
	2700		6.38	664.71			279.05	259.22	0.03	0.43	25.30	0.28
	2701		4.55	649.15			280.36	262.78	0.03	0.35	44.82	0.50
	2800		16.90	1046.45			281.19	262.78	0.02	0.35	65.64	0.73
	2900		17.23	932.94			281.88	274.49	0.01	0.35	80.65	0.90
STANDHYD (Tp not	2201		1.54	238.54			257.88	256.63	0.01		68.55	0.76
	2204		11.31	1078.97			269.47	259.45	0.01		120.70	1.34
	2400		2.47	267.36			258.55	256.67	0.01		65.86	0.73
	2401		4.17	629.16			260.05	256.72	0.01		110.96	1.23
	2500		4.12	454.60			261.35	256.72	0.01		76.00	0.84
	2501		4.86	537.91			259.53	257.52	0.00		115.09	1.28

Appendix F
VisualOTTHYMO Outputs

```
================================================================================
==========================

      V    V   I    SSSSS  U   U    A    L              (v 6.2.2015)
      V    V   I    SS     U   U   A A   L
       V  V    I     SS    U   U  AAAAA  L
       V  V    I      SS   U   U  A   A  L
        VV     I    SSSSS  UUUUU  A   A  LLLLL

       OOO   TTTTT  TTTTT  H   H  Y   Y  M   M   OOO    TM
      O   O    T      T    H   H   Y Y   MM MM  O   O
      O   O    T      T    H   H    Y    M   M  O   O
       OOO     T      T    H   H    Y    M   M   OOO
Developed and Distributed by Smart City Water Inc
Copyright 2007 - 2022 Smart City Water Inc
All rights reserved.


                  *****  D E T A I L E D   O U T P U T *****


  Input   filename: C:\Program Files (x86)\Visual OTTHYMO 6.2\VO2\voin.dat
  Output    filename:  C:\Users\rgood\AppData\Local\Civica\VH5\33ebb920-66ec-4fb5-
a62a-4a5f9948f25e\3a192199-8502-4b99-9195-413935f6264c\scenar
  Summary  filename:  C:\Users\rgood\AppData\Local\Civica\VH5\33ebb920-66ec-4fb5-
a62a-4a5f9948f25e\3a192199-8502-4b99-9195-413935f6264c\scenar


DATE: 10-26-2023                              TIME: 10:33:32

USER:



COMMENTS: _____________________________________________________________


--------------------------------------------------------------------------------
-------------------------
  ************************************************
  ** SIMULATION : 100yr 24hr 10min Chicago      **
  ************************************************


--------------------
| CHICAGO STORM    |    IDF curve parameters: A=2518.000
| Ptotal= 98.20 mm |                          B=  13.200
--------------------                          C=   0.882
                       used in:   INTENSITY =  A / (t + B)^C

                       Duration of storm  = 24.00 hrs
                       Storm time step    = 10.00 min
                       Time to peak ratio =  0.38

                TIME    RAIN |  TIME    RAIN |'  TIME    RAIN |  TIME    RAIN
                 hrs   mm/hr |   hrs   mm/hr |'   hrs   mm/hr |   hrs   mm/hr
                0.00    0.52 |  6.00    1.53 | 12.00    2.53 | 18.00    0.83
                0.17    0.53 |  6.17    1.63 | 12.17    2.39 | 18.17    0.82
                0.33    0.54 |  6.33    1.73 | 12.33    2.26 | 18.33    0.80
                0.50    0.55 |  6.50    1.85 | 12.50    2.15 | 18.50    0.79
                0.67    0.56 |  6.67    2.00 | 12.67    2.04 | 18.67    0.77
                0.83    0.57 |  6.83    2.16 | 12.83    1.95 | 18.83    0.76
                1.00    0.58 |  7.00    2.35 | 13.00    1.87 | 19.00    0.75
                1.17    0.60 |  7.17    2.59 | 13.17    1.79 | 19.17    0.74
                1.33    0.61 |  7.33    2.87 | 13.33    1.72 | 19.33    0.73
```

1.50	0.62	7.50	3.23	13.50	1.65	19.50	0.72
1.67	0.63	7.67	3.69	13.67	1.59	19.67	0.71
1.83	0.65	7.83	4.30	13.83	1.54	19.83	0.69
2.00	0.66	8.00	5.16	14.00	1.48	20.00	0.68
2.17	0.68	8.17	6.42	14.17	1.44	20.17	0.68
2.33	0.70	8.33	8.44	14.33	1.39	20.33	0.67
2.50	0.71	8.50	12.12	14.50	1.35	20.50	0.66
2.67	0.73	8.67	20.49	14.67	1.31	20.67	0.65
2.83	0.75	8.83	51.45	14.83	1.27	20.83	0.64
3.00	0.77	9.00	157.29	15.00	1.24	21.00	0.63
3.17	0.79	9.17	62.45	15.17	1.20	21.17	0.62
3.33	0.81	9.33	31.10	15.33	1.17	21.33	0.61
3.50	0.84	9.50	19.70	15.50	1.14	21.50	0.61
3.67	0.86	9.67	14.09	15.67	1.11	21.67	0.60
3.83	0.89	9.83	10.83	15.83	1.09	21.83	0.59
4.00	0.92	10.00	8.74	16.00	1.06	22.00	0.58
4.17	0.95	10.17	7.30	16.17	1.04	22.17	0.58
4.33	0.98	10.33	6.25	16.33	1.01	22.33	0.57
4.50	1.02	10.50	5.46	16.50	0.99	22.50	0.56
4.67	1.06	10.67	4.84	16.67	0.97	22.67	0.56
4.83	1.10	10.83	4.35	16.83	0.95	22.83	0.55
5.00	1.15	11.00	3.94	17.00	0.93	23.00	0.55
5.17	1.20	11.17	3.61	17.17	0.91	23.17	0.54
5.33	1.25	11.33	3.32	17.33	0.89	23.33	0.53
5.50	1.31	11.50	3.08	17.50	0.88	23.50	0.53
5.67	1.38	11.67	2.87	17.67	0.86	23.67	0.52
5.83	1.45	11.83	2.69	17.83	0.85	23.83	0.52

CALIB			
NASHYD (2300)	Area (ha)= 0.23	Curve Number (CN)= 47.0	
ID= 1 DT= 5.0 min	Ia (mm)= 5.00	# of Linear Res.(N)= 3.00	
	U.H. Tp(hrs)= 0.29		

NOTE: RAINFALL WAS TRANSFORMED TO 5.0 MIN. TIME STEP.

---- TRANSFORMED HYETOGRAPH ----

TIME hrs	RAIN mm/hr	TIME hrs	RAIN mm/hr	TIME hrs	RAIN mm/hr	TIME hrs	RAIN mm/hr
0.083	0.52	6.083	1.53	12.083	2.53	18.08	0.83
0.167	0.52	6.167	1.53	12.167	2.53	18.17	0.83
0.250	0.53	6.250	1.63	12.250	2.39	18.25	0.82
0.333	0.53	6.333	1.63	12.333	2.39	18.33	0.82
0.417	0.54	6.417	1.73	12.417	2.26	18.42	0.80
0.500	0.54	6.500	1.73	12.500	2.26	18.50	0.80
0.583	0.55	6.583	1.85	12.583	2.15	18.58	0.79
0.667	0.55	6.667	1.85	12.667	2.15	18.67	0.79
0.750	0.56	6.750	2.00	12.750	2.04	18.75	0.77
0.833	0.56	6.833	2.00	12.833	2.04	18.83	0.77
0.917	0.57	6.917	2.16	12.917	1.95	18.92	0.76
1.000	0.57	7.000	2.16	13.000	1.95	19.00	0.76
1.083	0.58	7.083	2.35	13.083	1.87	19.08	0.75
1.167	0.58	7.167	2.35	13.167	1.87	19.17	0.75
1.250	0.60	7.250	2.59	13.250	1.79	19.25	0.74
1.333	0.60	7.333	2.59	13.333	1.79	19.33	0.74
1.417	0.61	7.417	2.87	13.417	1.72	19.42	0.73
1.500	0.61	7.500	2.87	13.500	1.72	19.50	0.73
1.583	0.62	7.583	3.23	13.583	1.65	19.58	0.72
1.667	0.62	7.667	3.23	13.667	1.65	19.67	0.72
1.750	0.63	7.750	3.69	13.750	1.59	19.75	0.71
1.833	0.63	7.833	3.69	13.833	1.59	19.83	0.71

1.917	0.65	7.917	4.30	13.917	1.54	19.92	0.69
2.000	0.65	8.000	4.30	14.000	1.54	20.00	0.69
2.083	0.66	8.083	5.16	14.083	1.48	20.08	0.68
2.167	0.66	8.167	5.16	14.167	1.48	20.17	0.68
2.250	0.68	8.250	6.42	14.250	1.44	20.25	0.68
2.333	0.68	8.333	6.42	14.333	1.44	20.33	0.68
2.417	0.70	8.417	8.44	14.417	1.39	20.42	0.67
2.500	0.70	8.500	8.44	14.500	1.39	20.50	0.67
2.583	0.71	8.583	12.12	14.583	1.35	20.58	0.66
2.667	0.71	8.667	12.12	14.667	1.35	20.67	0.66
2.750	0.73	8.750	20.49	14.750	1.31	20.75	0.65
2.833	0.73	8.833	20.49	14.833	1.31	20.83	0.65
2.917	0.75	8.917	51.45	14.917	1.27	20.92	0.64
3.000	0.75	9.000	51.45	15.000	1.27	21.00	0.64
3.083	0.77	9.083	157.29	15.083	1.24	21.08	0.63
3.167	0.77	9.167	157.29	15.167	1.24	21.17	0.63
3.250	0.79	9.250	62.45	15.250	1.20	21.25	0.62
3.333	0.79	9.333	62.45	15.333	1.20	21.33	0.62
3.417	0.81	9.417	31.10	15.417	1.17	21.42	0.61
3.500	0.81	9.500	31.10	15.500	1.17	21.50	0.61
3.583	0.84	9.583	19.70	15.583	1.14	21.58	0.61
3.667	0.84	9.667	19.70	15.667	1.14	21.67	0.61
3.750	0.86	9.750	14.09	15.750	1.11	21.75	0.60
3.833	0.86	9.833	14.09	15.833	1.11	21.83	0.60
3.917	0.89	9.917	10.83	15.917	1.09	21.92	0.59
4.000	0.89	10.000	10.83	16.000	1.09	22.00	0.59
4.083	0.92	10.083	8.74	16.083	1.06	22.08	0.58
4.167	0.92	10.167	8.74	16.167	1.06	22.17	0.58
4.250	0.95	10.250	7.30	16.250	1.04	22.25	0.58
4.333	0.95	10.333	7.30	16.333	1.04	22.33	0.58
4.417	0.98	10.417	6.25	16.417	1.01	22.42	0.57
4.500	0.98	10.500	6.25	16.500	1.01	22.50	0.57
4.583	1.02	10.583	5.46	16.583	0.99	22.58	0.56
4.667	1.02	10.667	5.46	16.667	0.99	22.67	0.56
4.750	1.06	10.750	4.84	16.750	0.97	22.75	0.56
4.833	1.06	10.833	4.84	16.833	0.97	22.83	0.56
4.917	1.10	10.917	4.35	16.917	0.95	22.92	0.55
5.000	1.10	11.000	4.35	17.000	0.95	23.00	0.55
5.083	1.15	11.083	3.94	17.083	0.93	23.08	0.55
5.167	1.15	11.167	3.94	17.167	0.93	23.17	0.55
5.250	1.20	11.250	3.61	17.250	0.91	23.25	0.54
5.333	1.20	11.333	3.61	17.333	0.91	23.33	0.54
5.417	1.25	11.417	3.32	17.417	0.89	23.42	0.53
5.500	1.25	11.500	3.32	17.500	0.89	23.50	0.53
5.583	1.31	11.583	3.08	17.583	0.88	23.58	0.53
5.667	1.31	11.667	3.08	17.667	0.88	23.67	0.53
5.750	1.38	11.750	2.87	17.750	0.86	23.75	0.52
5.833	1.38	11.833	2.87	17.833	0.86	23.83	0.52
5.917	1.45	11.917	2.69	17.917	0.85	23.92	0.52
6.000	1.45	12.000	2.69	18.000	0.85	24.00	0.52

Unit Hyd Qpeak (cms)= 0.030

PEAK FLOW (cms)= 0.010 (i)
TIME TO PEAK (hrs)= 9.500
RUNOFF VOLUME (mm)= 22.866
TOTAL RAINFALL (mm)= 98.197
RUNOFF COEFFICIENT = 0.233

(i) PEAK FLOW DOES NOT INCLUDE BASEFLOW IF ANY.

CALIB

| STANDHYD (2202)| Area (ha)= 0.16
|ID= 1 DT= 5.0 min | Total Imp(%)= 83.00 Dir. Conn.(%)= 82.00

		IMPERVIOUS	PERVIOUS (i)
Surface Area	(ha)=	0.13	0.03
Dep. Storage	(mm)=	1.00	1.50
Average Slope	(%)=	1.00	2.00
Length	(m)=	32.66	40.00
Mannings n	=	0.013	0.250

NOTE: RAINFALL WAS TRANSFORMED TO 5.0 MIN. TIME STEP.

---- TRANSFORMED HYETOGRAPH ----

TIME hrs	RAIN mm/hr	TIME hrs	RAIN mm/hr	TIME hrs	RAIN mm/hr	TIME hrs	RAIN mm/hr
0.083	0.52	6.083	1.53	12.083	2.53	18.08	0.83
0.167	0.52	6.167	1.53	12.167	2.53	18.17	0.83
0.250	0.53	6.250	1.63	12.250	2.39	18.25	0.82
0.333	0.53	6.333	1.63	12.333	2.39	18.33	0.82
0.417	0.54	6.417	1.73	12.417	2.26	18.42	0.80
0.500	0.54	6.500	1.73	12.500	2.26	18.50	0.80
0.583	0.55	6.583	1.85	12.583	2.15	18.58	0.79
0.667	0.55	6.667	1.85	12.667	2.15	18.67	0.79
0.750	0.56	6.750	2.00	12.750	2.04	18.75	0.77
0.833	0.56	6.833	2.00	12.833	2.04	18.83	0.77
0.917	0.57	6.917	2.16	12.917	1.95	18.92	0.76
1.000	0.57	7.000	2.16	13.000	1.95	19.00	0.76
1.083	0.58	7.083	2.35	13.083	1.87	19.08	0.75
1.167	0.58	7.167	2.35	13.167	1.87	19.17	0.75
1.250	0.60	7.250	2.59	13.250	1.79	19.25	0.74
1.333	0.60	7.333	2.59	13.333	1.79	19.33	0.74
1.417	0.61	7.417	2.87	13.417	1.72	19.42	0.73
1.500	0.61	7.500	2.87	13.500	1.72	19.50	0.73
1.583	0.62	7.583	3.23	13.583	1.65	19.58	0.72
1.667	0.62	7.667	3.23	13.667	1.65	19.67	0.72
1.750	0.63	7.750	3.69	13.750	1.59	19.75	0.71
1.833	0.63	7.833	3.69	13.833	1.59	19.83	0.71
1.917	0.65	7.917	4.30	13.917	1.54	19.92	0.69
2.000	0.65	8.000	4.30	14.000	1.54	20.00	0.69
2.083	0.66	8.083	5.16	14.083	1.48	20.08	0.68
2.167	0.66	8.167	5.16	14.167	1.48	20.17	0.68
2.250	0.68	8.250	6.42	14.250	1.44	20.25	0.68
2.333	0.68	8.333	6.42	14.333	1.44	20.33	0.68
2.417	0.70	8.417	8.44	14.417	1.39	20.42	0.67
2.500	0.70	8.500	8.44	14.500	1.39	20.50	0.67
2.583	0.71	8.583	12.12	14.583	1.35	20.58	0.66
2.667	0.71	8.667	12.12	14.667	1.35	20.67	0.66
2.750	0.73	8.750	20.49	14.750	1.31	20.75	0.65
2.833	0.73	8.833	20.49	14.833	1.31	20.83	0.65
2.917	0.75	8.917	51.45	14.917	1.27	20.92	0.64
3.000	0.75	9.000	51.45	15.000	1.27	21.00	0.64
3.083	0.77	9.083	157.29	15.083	1.24	21.08	0.63
3.167	0.77	9.167	157.29	15.167	1.24	21.17	0.63
3.250	0.79	9.250	62.45	15.250	1.20	21.25	0.62
3.333	0.79	9.333	62.45	15.333	1.20	21.33	0.62
3.417	0.81	9.417	31.10	15.417	1.17	21.42	0.61
3.500	0.81	9.500	31.10	15.500	1.17	21.50	0.61
3.583	0.84	9.583	19.70	15.583	1.14	21.58	0.61
3.667	0.84	9.667	19.70	15.667	1.14	21.67	0.61
3.750	0.86	9.750	14.09	15.750	1.11	21.75	0.60
3.833	0.86	9.833	14.09	15.833	1.11	21.83	0.60
3.917	0.89	9.917	10.83	15.917	1.09	21.92	0.59
4.000	0.89	10.000	10.83	16.000	1.09	22.00	0.59

4.083	0.92	10.083	8.74	16.083	1.06	22.08	0.58
4.167	0.92	10.167	8.74	16.167	1.06	22.17	0.58
4.250	0.95	10.250	7.30	16.250	1.04	22.25	0.58
4.333	0.95	10.333	7.30	16.333	1.04	22.33	0.58
4.417	0.98	10.417	6.25	16.417	1.01	22.42	0.57
4.500	0.98	10.500	6.25	16.500	1.01	22.50	0.57
4.583	1.02	10.583	5.46	16.583	0.99	22.58	0.56
4.667	1.02	10.667	5.46	16.667	0.99	22.67	0.56
4.750	1.06	10.750	4.84	16.750	0.97	22.75	0.56
4.833	1.06	10.833	4.84	16.833	0.97	22.83	0.56
4.917	1.10	10.917	4.35	16.917	0.95	22.92	0.55
5.000	1.10	11.000	4.35	17.000	0.95	23.00	0.55
5.083	1.15	11.083	3.94	17.083	0.93	23.08	0.55
5.167	1.15	11.167	3.94	17.167	0.93	23.17	0.55
5.250	1.20	11.250	3.61	17.250	0.91	23.25	0.54
5.333	1.20	11.333	3.61	17.333	0.91	23.33	0.54
5.417	1.25	11.417	3.32	17.417	0.89	23.42	0.53
5.500	1.25	11.500	3.32	17.500	0.89	23.50	0.53
5.583	1.31	11.583	3.08	17.583	0.88	23.58	0.53
5.667	1.31	11.667	3.08	17.667	0.88	23.67	0.53
5.750	1.38	11.750	2.87	17.750	0.86	23.75	0.52
5.833	1.38	11.833	2.87	17.833	0.86	23.83	0.52
5.917	1.45	11.917	2.69	17.917	0.85	23.92	0.52
6.000	1.45	12.000	2.69	18.000	0.85	24.00	0.52

Max.Eff.Inten.(mm/hr)=	157.29	155.90	
over (min)	5.00	5.00	
Storage Coeff. (min)=	1.09 (ii)	4.23 (ii)	
Unit Hyd. Tpeak (min)=	5.00	5.00	
Unit Hyd. peak (cms)=	0.34	0.24	
			TOTALS
PEAK FLOW (cms)=	0.06	0.01	0.068 (iii)
TIME TO PEAK (hrs)=	9.17	9.17	9.17
RUNOFF VOLUME (mm)=	97.20	85.61	95.11
TOTAL RAINFALL (mm)=	98.20	98.20	98.20
RUNOFF COEFFICIENT =	0.99	0.87	0.97

***** WARNING: STORAGE COEFF. IS SMALLER THAN TIME STEP!

(i) CN PROCEDURE SELECTED FOR PERVIOUS LOSSES:
CN* = 95.0 Ia = Dep. Storage (Above)
(ii) TIME STEP (DT) SHOULD BE SMALLER OR EQUAL
THAN THE STORAGE COEFFICIENT.
(iii) PEAK FLOW DOES NOT INCLUDE BASEFLOW IF ANY.

CALIB	
STANDHYD (2203)	Area (ha)= 0.17
ID= 1 DT= 5.0 min	Total Imp(%)= 88.00 Dir. Conn.(%)= 86.00

		IMPERVIOUS	PERVIOUS (i)
Surface Area	(ha)=	0.15	0.02
Dep. Storage	(mm)=	1.00	1.50
Average Slope	(%)=	1.00	2.00
Length	(m)=	33.67	40.00
Mannings n	=	0.013	0.250

NOTE: RAINFALL WAS TRANSFORMED TO 5.0 MIN. TIME STEP.

---- TRANSFORMED HYETOGRAPH ----

TIME hrs	RAIN mm/hr	TIME hrs	RAIN mm/hr	TIME hrs	RAIN mm/hr	TIME hrs	RAIN mm/hr

0.083	0.52	6.083	1.53	12.083	2.53	18.08	0.83
0.167	0.52	6.167	1.53	12.167	2.53	18.17	0.83
0.250	0.53	6.250	1.63	12.250	2.39	18.25	0.82
0.333	0.53	6.333	1.63	12.333	2.39	18.33	0.82
0.417	0.54	6.417	1.73	12.417	2.26	18.42	0.80
0.500	0.54	6.500	1.73	12.500	2.26	18.50	0.80
0.583	0.55	6.583	1.85	12.583	2.15	18.58	0.79
0.667	0.55	6.667	1.85	12.667	2.15	18.67	0.79
0.750	0.56	6.750	2.00	12.750	2.04	18.75	0.77
0.833	0.56	6.833	2.00	12.833	2.04	18.83	0.77
0.917	0.57	6.917	2.16	12.917	1.95	18.92	0.76
1.000	0.57	7.000	2.16	13.000	1.95	19.00	0.76
1.083	0.58	7.083	2.35	13.083	1.87	19.08	0.75
1.167	0.58	7.167	2.35	13.167	1.87	19.17	0.75
1.250	0.60	7.250	2.59	13.250	1.79	19.25	0.74
1.333	0.60	7.333	2.59	13.333	1.79	19.33	0.74
1.417	0.61	7.417	2.87	13.417	1.72	19.42	0.73
1.500	0.61	7.500	2.87	13.500	1.72	19.50	0.73
1.583	0.62	7.583	3.23	13.583	1.65	19.58	0.72
1.667	0.62	7.667	3.23	13.667	1.65	19.67	0.72
1.750	0.63	7.750	3.69	13.750	1.59	19.75	0.71
1.833	0.63	7.833	3.69	13.833	1.59	19.83	0.71
1.917	0.65	7.917	4.30	13.917	1.54	19.92	0.69
2.000	0.65	8.000	4.30	14.000	1.54	20.00	0.69
2.083	0.66	8.083	5.16	14.083	1.48	20.08	0.68
2.167	0.66	8.167	5.16	14.167	1.48	20.17	0.68
2.250	0.68	8.250	6.42	14.250	1.44	20.25	0.68
2.333	0.68	8.333	6.42	14.333	1.44	20.33	0.68
2.417	0.70	8.417	8.44	14.417	1.39	20.42	0.67
2.500	0.70	8.500	8.44	14.500	1.39	20.50	0.67
2.583	0.71	8.583	12.12	14.583	1.35	20.58	0.66
2.667	0.71	8.667	12.12	14.667	1.35	20.67	0.66
2.750	0.73	8.750	20.49	14.750	1.31	20.75	0.65
2.833	0.73	8.833	20.49	14.833	1.31	20.83	0.65
2.917	0.75	8.917	51.45	14.917	1.27	20.92	0.64
3.000	0.75	9.000	51.45	15.000	1.27	21.00	0.64
3.083	0.77	9.083	157.29	15.083	1.24	21.08	0.63
3.167	0.77	9.167	157.29	15.167	1.24	21.17	0.63
3.250	0.79	9.250	62.45	15.250	1.20	21.25	0.62
3.333	0.79	9.333	62.45	15.333	1.20	21.33	0.62
3.417	0.81	9.417	31.10	15.417	1.17	21.42	0.61
3.500	0.81	9.500	31.10	15.500	1.17	21.50	0.61
3.583	0.84	9.583	19.70	15.583	1.14	21.58	0.61
3.667	0.84	9.667	19.70	15.667	1.14	21.67	0.61
3.750	0.86	9.750	14.09	15.750	1.11	21.75	0.60
3.833	0.86	9.833	14.09	15.833	1.11	21.83	0.60
3.917	0.89	9.917	10.83	15.917	1.09	21.92	0.59
4.000	0.89	10.000	10.83	16.000	1.09	22.00	0.59
4.083	0.92	10.083	8.74	16.083	1.06	22.08	0.58
4.167	0.92	10.167	8.74	16.167	1.06	22.17	0.58
4.250	0.95	10.250	7.30	16.250	1.04	22.25	0.58
4.333	0.95	10.333	7.30	16.333	1.04	22.33	0.58
4.417	0.98	10.417	6.25	16.417	1.01	22.42	0.57
4.500	0.98	10.500	6.25	16.500	1.01	22.50	0.57
4.583	1.02	10.583	5.46	16.583	0.99	22.58	0.56
4.667	1.02	10.667	5.46	16.667	0.99	22.67	0.56
4.750	1.06	10.750	4.84	16.750	0.97	22.75	0.56
4.833	1.06	10.833	4.84	16.833	0.97	22.83	0.56
4.917	1.10	10.917	4.35	16.917	0.95	22.92	0.55
5.000	1.10	11.000	4.35	17.000	0.95	23.00	0.55
5.083	1.15	11.083	3.94	17.083	0.93	23.08	0.55
5.167	1.15	11.167	3.94	17.167	0.93	23.17	0.55
5.250	1.20	11.250	3.61	17.250	0.91	23.25	0.54
5.333	1.20	11.333	3.61	17.333	0.91	23.33	0.54

5.417	1.25	11.417	3.32	17.417	0.89	23.42	0.53
5.500	1.25	11.500	3.32	17.500	0.89	23.50	0.53
5.583	1.31	11.583	3.08	17.583	0.88	23.58	0.53
5.667	1.31	11.667	3.08	17.667	0.88	23.67	0.53
5.750	1.38	11.750	2.87	17.750	0.86	23.75	0.52
5.833	1.38	11.833	2.87	17.833	0.86	23.83	0.52
5.917	1.45	11.917	2.69	17.917	0.85	23.92	0.52
6.000	1.45	12.000	2.69	18.000	0.85	24.00	0.52

Max.Eff.Inten.(mm/hr)=	157.29	181.41	
over (min)	5.00	5.00	
Storage Coeff. (min)=	1.11 (ii)	3.79 (ii)	
Unit Hyd. Tpeak (min)=	5.00	5.00	
Unit Hyd. peak (cms)=	0.34	0.25	
			TOTALS
PEAK FLOW (cms)=	0.06	0.01	0.074 (iii)
TIME TO PEAK (hrs)=	9.17	9.17	9.17
RUNOFF VOLUME (mm)=	97.20	92.66	96.56
TOTAL RAINFALL (mm)=	98.20	98.20	98.20
RUNOFF COEFFICIENT =	0.99	0.94	0.98

***** WARNING: STORAGE COEFF. IS SMALLER THAN TIME STEP!

(i) CN PROCEDURE SELECTED FOR PERVIOUS LOSSES:
CN* = 98.0 Ia = Dep. Storage (Above)
(ii) TIME STEP (DT) SHOULD BE SMALLER OR EQUAL
THAN THE STORAGE COEFFICIENT.
(iii) PEAK FLOW DOES NOT INCLUDE BASEFLOW IF ANY.

CALIB	
STANDHYD (2206)	Area (ha)= 0.33
ID= 1 DT= 5.0 min	Total Imp(%)= 90.00 Dir. Conn.(%)= 90.00

		IMPERVIOUS	PERVIOUS (i)
Surface Area	(ha)=	0.30	0.03
Dep. Storage	(mm)=	1.00	1.50
Average Slope	(%)=	1.00	2.00
Length	(m)=	46.90	40.00
Mannings n	=	0.013	0.250

NOTE: RAINFALL WAS TRANSFORMED TO 5.0 MIN. TIME STEP.

---- TRANSFORMED HYETOGRAPH ----

TIME hrs	RAIN mm/hr	TIME hrs	RAIN mm/hr	TIME hrs	RAIN mm/hr	TIME hrs	RAIN mm/hr
0.083	0.52	6.083	1.53	12.083	2.53	18.08	0.83
0.167	0.52	6.167	1.53	12.167	2.53	18.17	0.83
0.250	0.53	6.250	1.63	12.250	2.39	18.25	0.82
0.333	0.53	6.333	1.63	12.333	2.39	18.33	0.82
0.417	0.54	6.417	1.73	12.417	2.26	18.42	0.80
0.500	0.54	6.500	1.73	12.500	2.26	18.50	0.80
0.583	0.55	6.583	1.85	12.583	2.15	18.58	0.79
0.667	0.55	6.667	1.85	12.667	2.15	18.67	0.79
0.750	0.56	6.750	2.00	12.750	2.04	18.75	0.77
0.833	0.56	6.833	2.00	12.833	2.04	18.83	0.77
0.917	0.57	6.917	2.16	12.917	1.95	18.92	0.76
1.000	0.57	7.000	2.16	13.000	1.95	19.00	0.76
1.083	0.58	7.083	2.35	13.083	1.87	19.08	0.75
1.167	0.58	7.167	2.35	13.167	1.87	19.17	0.75
1.250	0.60	7.250	2.59	13.250	1.79	19.25	0.74
1.333	0.60	7.333	2.59	13.333	1.79	19.33	0.74

1.417	0.61	7.417	2.87	13.417	1.72	19.42	0.73
1.500	0.61	7.500	2.87	13.500	1.72	19.50	0.73
1.583	0.62	7.583	3.23	13.583	1.65	19.58	0.72
1.667	0.62	7.667	3.23	13.667	1.65	19.67	0.72
1.750	0.63	7.750	3.69	13.750	1.59	19.75	0.71
1.833	0.63	7.833	3.69	13.833	1.59	19.83	0.71
1.917	0.65	7.917	4.30	13.917	1.54	19.92	0.69
2.000	0.65	8.000	4.30	14.000	1.54	20.00	0.69
2.083	0.66	8.083	5.16	14.083	1.48	20.08	0.68
2.167	0.66	8.167	5.16	14.167	1.48	20.17	0.68
2.250	0.68	8.250	6.42	14.250	1.44	20.25	0.68
2.333	0.68	8.333	6.42	14.333	1.44	20.33	0.68
2.417	0.70	8.417	8.44	14.417	1.39	20.42	0.67
2.500	0.70	8.500	8.44	14.500	1.39	20.50	0.67
2.583	0.71	8.583	12.12	14.583	1.35	20.58	0.66
2.667	0.71	8.667	12.12	14.667	1.35	20.67	0.66
2.750	0.73	8.750	20.49	14.750	1.31	20.75	0.65
2.833	0.73	8.833	20.49	14.833	1.31	20.83	0.65
2.917	0.75	8.917	51.45	14.917	1.27	20.92	0.64
3.000	0.75	9.000	51.45	15.000	1.27	21.00	0.64
3.083	0.77	9.083	157.29	15.083	1.24	21.08	0.63
3.167	0.77	9.167	157.29	15.167	1.24	21.17	0.63
3.250	0.79	9.250	62.45	15.250	1.20	21.25	0.62
3.333	0.79	9.333	62.45	15.333	1.20	21.33	0.62
3.417	0.81	9.417	31.10	15.417	1.17	21.42	0.61
3.500	0.81	9.500	31.10	15.500	1.17	21.50	0.61
3.583	0.84	9.583	19.70	15.583	1.14	21.58	0.61
3.667	0.84	9.667	19.70	15.667	1.14	21.67	0.61
3.750	0.86	9.750	14.09	15.750	1.11	21.75	0.60
3.833	0.86	9.833	14.09	15.833	1.11	21.83	0.60
3.917	0.89	9.917	10.83	15.917	1.09	21.92	0.59
4.000	0.89	10.000	10.83	16.000	1.09	22.00	0.59
4.083	0.92	10.083	8.74	16.083	1.06	22.08	0.58
4.167	0.92	10.167	8.74	16.167	1.06	22.17	0.58
4.250	0.95	10.250	7.30	16.250	1.04	22.25	0.58
4.333	0.95	10.333	7.30	16.333	1.04	22.33	0.58
4.417	0.98	10.417	6.25	16.417	1.01	22.42	0.57
4.500	0.98	10.500	6.25	16.500	1.01	22.50	0.57
4.583	1.02	10.583	5.46	16.583	0.99	22.58	0.56
4.667	1.02	10.667	5.46	16.667	0.99	22.67	0.56
4.750	1.06	10.750	4.84	16.750	0.97	22.75	0.56
4.833	1.06	10.833	4.84	16.833	0.97	22.83	0.56
4.917	1.10	10.917	4.35	16.917	0.95	22.92	0.55
5.000	1.10	11.000	4.35	17.000	0.95	23.00	0.55
5.083	1.15	11.083	3.94	17.083	0.93	23.08	0.55
5.167	1.15	11.167	3.94	17.167	0.93	23.17	0.55
5.250	1.20	11.250	3.61	17.250	0.91	23.25	0.54
5.333	1.20	11.333	3.61	17.333	0.91	23.33	0.54
5.417	1.25	11.417	3.32	17.417	0.89	23.42	0.53
5.500	1.25	11.500	3.32	17.500	0.89	23.50	0.53
5.583	1.31	11.583	3.08	17.583	0.88	23.58	0.53
5.667	1.31	11.667	3.08	17.667	0.88	23.67	0.53
5.750	1.38	11.750	2.87	17.750	0.86	23.75	0.52
5.833	1.38	11.833	2.87	17.833	0.86	23.83	0.52
5.917	1.45	11.917	2.69	17.917	0.85	23.92	0.52
6.000	1.45	12.000	2.69	18.000	0.85	24.00	0.52

Max.Eff.Inten.(mm/hr)=	157.29	156.62	
over (min)	5.00	5.00	
Storage Coeff. (min)=	1.35 (ii)	3.80 (ii)	
Unit Hyd. Tpeak (min)=	5.00	5.00	
Unit Hyd. peak (cms)=	0.33	0.25	
			TOTALS
PEAK FLOW (cms)=	0.13	0.01	0.143 (iii)

TIME TO PEAK (hrs)=	9.17	9.17	9.17
RUNOFF VOLUME (mm)=	97.20	94.20	96.89
TOTAL RAINFALL (mm)=	98.20	98.20	98.20
RUNOFF COEFFICIENT =	0.99	0.96	0.99

***** WARNING: STORAGE COEFF. IS SMALLER THAN TIME STEP!

(i) CN PROCEDURE SELECTED FOR PERVIOUS LOSSES:
CN* = 99.0 Ia = Dep. Storage (Above)
(ii) TIME STEP (DT) SHOULD BE SMALLER OR EQUAL
THAN THE STORAGE COEFFICIENT.
(iii) PEAK FLOW DOES NOT INCLUDE BASEFLOW IF ANY.

CALIB	
STANDHYD (2207)	Area (ha)= 0.10
ID= 1 DT= 5.0 min	Total Imp(%)= 52.00 Dir. Conn.(%)= 28.00

		IMPERVIOUS	PERVIOUS (i)
Surface Area	(ha)=	0.05	0.05
Dep. Storage	(mm)=	1.00	1.50
Average Slope	(%)=	1.00	2.00
Length	(m)=	25.82	40.00
Mannings n	=	0.013	0.250

NOTE: RAINFALL WAS TRANSFORMED TO 5.0 MIN. TIME STEP.

---- TRANSFORMED HYETOGRAPH ----

TIME hrs	RAIN mm/hr	TIME hrs	RAIN mm/hr	TIME hrs	RAIN mm/hr	TIME hrs	RAIN mm/hr
0.083	0.52	6.083	1.53	12.083	2.53	18.08	0.83
0.167	0.52	6.167	1.53	12.167	2.53	18.17	0.83
0.250	0.53	6.250	1.63	12.250	2.39	18.25	0.82
0.333	0.53	6.333	1.63	12.333	2.39	18.33	0.82
0.417	0.54	6.417	1.73	12.417	2.26	18.42	0.80
0.500	0.54	6.500	1.73	12.500	2.26	18.50	0.80
0.583	0.55	6.583	1.85	12.583	2.15	18.58	0.79
0.667	0.55	6.667	1.85	12.667	2.15	18.67	0.79
0.750	0.56	6.750	2.00	12.750	2.04	18.75	0.77
0.833	0.56	6.833	2.00	12.833	2.04	18.83	0.77
0.917	0.57	6.917	2.16	12.917	1.95	18.92	0.76
1.000	0.57	7.000	2.16	13.000	1.95	19.00	0.76
1.083	0.58	7.083	2.35	13.083	1.87	19.08	0.75
1.167	0.58	7.167	2.35	13.167	1.87	19.17	0.75
1.250	0.60	7.250	2.59	13.250	1.79	19.25	0.74
1.333	0.60	7.333	2.59	13.333	1.79	19.33	0.74
1.417	0.61	7.417	2.87	13.417	1.72	19.42	0.73
1.500	0.61	7.500	2.87	13.500	1.72	19.50	0.73
1.583	0.62	7.583	3.23	13.583	1.65	19.58	0.72
1.667	0.62	7.667	3.23	13.667	1.65	19.67	0.72
1.750	0.63	7.750	3.69	13.750	1.59	19.75	0.71
1.833	0.63	7.833	3.69	13.833	1.59	19.83	0.71
1.917	0.65	7.917	4.30	13.917	1.54	19.92	0.69
2.000	0.65	8.000	4.30	14.000	1.54	20.00	0.69
2.083	0.66	8.083	5.16	14.083	1.48	20.08	0.68
2.167	0.66	8.167	5.16	14.167	1.48	20.17	0.68
2.250	0.68	8.250	6.42	14.250	1.44	20.25	0.68
2.333	0.68	8.333	6.42	14.333	1.44	20.33	0.68
2.417	0.70	8.417	8.44	14.417	1.39	20.42	0.67
2.500	0.70	8.500	8.44	14.500	1.39	20.50	0.67
2.583	0.71	8.583	12.12	14.583	1.35	20.58	0.66
2.667	0.71	8.667	12.12	14.667	1.35	20.67	0.66

2.750	0.73	8.750	20.49	14.750	1.31	20.75	0.65
2.833	0.73	8.833	20.49	14.833	1.31	20.83	0.65
2.917	0.75	8.917	51.45	14.917	1.27	20.92	0.64
3.000	0.75	9.000	51.45	15.000	1.27	21.00	0.64
3.083	0.77	9.083	157.29	15.083	1.24	21.08	0.63
3.167	0.77	9.167	157.29	15.167	1.24	21.17	0.63
3.250	0.79	9.250	62.45	15.250	1.20	21.25	0.62
3.333	0.79	9.333	62.45	15.333	1.20	21.33	0.62
3.417	0.81	9.417	31.10	15.417	1.17	21.42	0.61
3.500	0.81	9.500	31.10	15.500	1.17	21.50	0.61
3.583	0.84	9.583	19.70	15.583	1.14	21.58	0.61
3.667	0.84	9.667	19.70	15.667	1.14	21.67	0.61
3.750	0.86	9.750	14.09	15.750	1.11	21.75	0.60
3.833	0.86	9.833	14.09	15.833	1.11	21.83	0.60
3.917	0.89	9.917	10.83	15.917	1.09	21.92	0.59
4.000	0.89	10.000	10.83	16.000	1.09	22.00	0.59
4.083	0.92	10.083	8.74	16.083	1.06	22.08	0.58
4.167	0.92	10.167	8.74	16.167	1.06	22.17	0.58
4.250	0.95	10.250	7.30	16.250	1.04	22.25	0.58
4.333	0.95	10.333	7.30	16.333	1.04	22.33	0.58
4.417	0.98	10.417	6.25	16.417	1.01	22.42	0.57
4.500	0.98	10.500	6.25	16.500	1.01	22.50	0.57
4.583	1.02	10.583	5.46	16.583	0.99	22.58	0.56
4.667	1.02	10.667	5.46	16.667	0.99	22.67	0.56
4.750	1.06	10.750	4.84	16.750	0.97	22.75	0.56
4.833	1.06	10.833	4.84	16.833	0.97	22.83	0.56
4.917	1.10	10.917	4.35	16.917	0.95	22.92	0.55
5.000	1.10	11.000	4.35	17.000	0.95	23.00	0.55
5.083	1.15	11.083	3.94	17.083	0.93	23.08	0.55
5.167	1.15	11.167	3.94	17.167	0.93	23.17	0.55
5.250	1.20	11.250	3.61	17.250	0.91	23.25	0.54
5.333	1.20	11.333	3.61	17.333	0.91	23.33	0.54
5.417	1.25	11.417	3.32	17.417	0.89	23.42	0.53
5.500	1.25	11.500	3.32	17.500	0.89	23.50	0.53
5.583	1.31	11.583	3.08	17.583	0.88	23.58	0.53
5.667	1.31	11.667	3.08	17.667	0.88	23.67	0.53
5.750	1.38	11.750	2.87	17.750	0.86	23.75	0.52
5.833	1.38	11.833	2.87	17.833	0.86	23.83	0.52
5.917	1.45	11.917	2.69	17.917	0.85	23.92	0.52
6.000	1.45	12.000	2.69	18.000	0.85	24.00	0.52

Max.Eff.Inten.(mm/hr)=	157.29	142.18	
over (min)	5.00	10.00	
Storage Coeff. (min)=	0.95 (ii)	7.08 (ii)	
Unit Hyd. Tpeak (min)=	5.00	10.00	
Unit Hyd. peak (cms)=	0.34	0.14	
			TOTALS
PEAK FLOW (cms)=	0.01	0.01	0.025 (iii)
TIME TO PEAK (hrs)=	9.17	9.25	9.17
RUNOFF VOLUME (mm)=	97.20	57.94	68.89
TOTAL RAINFALL (mm)=	98.20	98.20	98.20
RUNOFF COEFFICIENT =	0.99	0.59	0.70

***** WARNING: STORAGE COEFF. IS SMALLER THAN TIME STEP!

(i) CN PROCEDURE SELECTED FOR PERVIOUS LOSSES:
CN* = 72.0 Ia = Dep. Storage (Above)
(ii) TIME STEP (DT) SHOULD BE SMALLER OR EQUAL
THAN THE STORAGE COEFFICIENT.
(iii) PEAK FLOW DOES NOT INCLUDE BASEFLOW IF ANY.

CALIB

| STANDHYD (2204)| Area (ha)= 11.31
|ID= 1 DT= 5.0 min | Total Imp(%)= 21.00 Dir. Conn.(%)= 12.00

		IMPERVIOUS	PERVIOUS (i)
Surface Area	(ha)=	2.38	8.93
Dep. Storage	(mm)=	1.00	1.50
Average Slope	(%)=	1.00	2.00
Length	(m)=	274.59	40.00
Mannings n	=	0.013	0.250

NOTE: RAINFALL WAS TRANSFORMED TO 5.0 MIN. TIME STEP.

---- TRANSFORMED HYETOGRAPH ----

TIME hrs	RAIN mm/hr	TIME hrs	RAIN mm/hr	TIME hrs	RAIN mm/hr	TIME hrs	RAIN mm/hr
0.083	0.52	6.083	1.53	12.083	2.53	18.08	0.83
0.167	0.52	6.167	1.53	12.167	2.53	18.17	0.83
0.250	0.53	6.250	1.63	12.250	2.39	18.25	0.82
0.333	0.53	6.333	1.63	12.333	2.39	18.33	0.82
0.417	0.54	6.417	1.73	12.417	2.26	18.42	0.80
0.500	0.54	6.500	1.73	12.500	2.26	18.50	0.80
0.583	0.55	6.583	1.85	12.583	2.15	18.58	0.79
0.667	0.55	6.667	1.85	12.667	2.15	18.67	0.79
0.750	0.56	6.750	2.00	12.750	2.04	18.75	0.77
0.833	0.56	6.833	2.00	12.833	2.04	18.83	0.77
0.917	0.57	6.917	2.16	12.917	1.95	18.92	0.76
1.000	0.57	7.000	2.16	13.000	1.95	19.00	0.76
1.083	0.58	7.083	2.35	13.083	1.87	19.08	0.75
1.167	0.58	7.167	2.35	13.167	1.87	19.17	0.75
1.250	0.60	7.250	2.59	13.250	1.79	19.25	0.74
1.333	0.60	7.333	2.59	13.333	1.79	19.33	0.74
1.417	0.61	7.417	2.87	13.417	1.72	19.42	0.73
1.500	0.61	7.500	2.87	13.500	1.72	19.50	0.73
1.583	0.62	7.583	3.23	13.583	1.65	19.58	0.72
1.667	0.62	7.667	3.23	13.667	1.65	19.67	0.72
1.750	0.63	7.750	3.69	13.750	1.59	19.75	0.71
1.833	0.63	7.833	3.69	13.833	1.59	19.83	0.71
1.917	0.65	7.917	4.30	13.917	1.54	19.92	0.69
2.000	0.65	8.000	4.30	14.000	1.54	20.00	0.69
2.083	0.66	8.083	5.16	14.083	1.48	20.08	0.68
2.167	0.66	8.167	5.16	14.167	1.48	20.17	0.68
2.250	0.68	8.250	6.42	14.250	1.44	20.25	0.68
2.333	0.68	8.333	6.42	14.333	1.44	20.33	0.68
2.417	0.70	8.417	8.44	14.417	1.39	20.42	0.67
2.500	0.70	8.500	8.44	14.500	1.39	20.50	0.67
2.583	0.71	8.583	12.12	14.583	1.35	20.58	0.66
2.667	0.71	8.667	12.12	14.667	1.35	20.67	0.66
2.750	0.73	8.750	20.49	14.750	1.31	20.75	0.65
2.833	0.73	8.833	20.49	14.833	1.31	20.83	0.65
2.917	0.75	8.917	51.45	14.917	1.27	20.92	0.64
3.000	0.75	9.000	51.45	15.000	1.27	21.00	0.64
3.083	0.77	9.083	157.29	15.083	1.24	21.08	0.63
3.167	0.77	9.167	157.29	15.167	1.24	21.17	0.63
3.250	0.79	9.250	62.45	15.250	1.20	21.25	0.62
3.333	0.79	9.333	62.45	15.333	1.20	21.33	0.62
3.417	0.81	9.417	31.10	15.417	1.17	21.42	0.61
3.500	0.81	9.500	31.10	15.500	1.17	21.50	0.61
3.583	0.84	9.583	19.70	15.583	1.14	21.58	0.61
3.667	0.84	9.667	19.70	15.667	1.14	21.67	0.61
3.750	0.86	9.750	14.09	15.750	1.11	21.75	0.60
3.833	0.86	9.833	14.09	15.833	1.11	21.83	0.60
3.917	0.89	9.917	10.83	15.917	1.09	21.92	0.59
4.000	0.89	10.000	10.83	16.000	1.09	22.00	0.59

4.083	0.92	10.083	8.74	16.083	1.06	22.08	0.58
4.167	0.92	10.167	8.74	16.167	1.06	22.17	0.58
4.250	0.95	10.250	7.30	16.250	1.04	22.25	0.58
4.333	0.95	10.333	7.30	16.333	1.04	22.33	0.58
4.417	0.98	10.417	6.25	16.417	1.01	22.42	0.57
4.500	0.98	10.500	6.25	16.500	1.01	22.50	0.57
4.583	1.02	10.583	5.46	16.583	0.99	22.58	0.56
4.667	1.02	10.667	5.46	16.667	0.99	22.67	0.56
4.750	1.06	10.750	4.84	16.750	0.97	22.75	0.56
4.833	1.06	10.833	4.84	16.833	0.97	22.83	0.56
4.917	1.10	10.917	4.35	16.917	0.95	22.92	0.55
5.000	1.10	11.000	4.35	17.000	0.95	23.00	0.55
5.083	1.15	11.083	3.94	17.083	0.93	23.08	0.55
5.167	1.15	11.167	3.94	17.167	0.93	23.17	0.55
5.250	1.20	11.250	3.61	17.250	0.91	23.25	0.54
5.333	1.20	11.333	3.61	17.333	0.91	23.33	0.54
5.417	1.25	11.417	3.32	17.417	0.89	23.42	0.53
5.500	1.25	11.500	3.32	17.500	0.89	23.50	0.53
5.583	1.31	11.583	3.08	17.583	0.88	23.58	0.53
5.667	1.31	11.667	3.08	17.667	0.88	23.67	0.53
5.750	1.38	11.750	2.87	17.750	0.86	23.75	0.52
5.833	1.38	11.833	2.87	17.833	0.86	23.83	0.52
5.917	1.45	11.917	2.69	17.917	0.85	23.92	0.52
6.000	1.45	12.000	2.69	18.000	0.85	24.00	0.52

Max.Eff.Inten.(mm/hr)=	157.29	89.90		
over (min)	5.00	15.00		
Storage Coeff. (min)=	3.91 (ii)	11.27 (ii)		
Unit Hyd. Tpeak (min)=	5.00	15.00		
Unit Hyd. peak (cms)=	0.25	0.09		
			TOTALS	
PEAK FLOW (cms)=	0.56	1.38	1.639 (iii)	
TIME TO PEAK (hrs)=	9.17	9.33	9.33	
RUNOFF VOLUME (mm)=	97.20	50.56	56.15	
TOTAL RAINFALL (mm)=	98.20	98.20	98.20	
RUNOFF COEFFICIENT =	0.99	0.51	0.57	

***** WARNING: STORAGE COEFF. IS SMALLER THAN TIME STEP!
***** WARNING:FOR AREAS WITH IMPERVIOUS RATIOS BELOW 20%
YOU SHOULD CONSIDER SPLITTING THE AREA.

(i) CN PROCEDURE SELECTED FOR PERVIOUS LOSSES:
CN* = 72.0 Ia = Dep. Storage (Above)
(ii) TIME STEP (DT) SHOULD BE SMALLER OR EQUAL
THAN THE STORAGE COEFFICIENT.
(iii) PEAK FLOW DOES NOT INCLUDE BASEFLOW IF ANY.

ADD HYD (0018)		AREA	QPEAK	TPEAK	R.V.
1 + 2 = 3		(ha)	(cms)	(hrs)	(mm)
ID1= 1 (2204):		11.31	1.639	9.33	56.15
+ ID2= 2 (2207):		0.10	0.025	9.17	68.89
ID = 3 (0018):		11.41	1.655	9.33	56.27

NOTE: PEAK FLOWS DO NOT INCLUDE BASEFLOWS IF ANY.

ROUTE CHN(22061)		
IN= 2---> OUT= 1	Routing time step (min)'=	5.00

<-------- DATA FOR SECTION (1.1) -------->

Distance	Elevation	Manning	
0.00	0.15	0.0110	
0.01	0.00	0.0110 /0.0110	Main Channel
4.26	0.02	0.0110	Main Channel
8.51	0.00	0.0110 /0.0110	Main Channel
8.52	0.15	0.0110	

<-------------------- TRAVEL TIME TABLE ---------------------->

DEPTH (m)	ELEV (m)	VOLUME (cu.m.)	FLOW RATE (cms)	VELOCITY (m/s)	TRAV.TIME (min)
0.01	0.01	.256E+01	0.0	0.16	21.30
0.02	0.02	.102E+02	0.0	0.25	13.42
0.02	0.02	.228E+02	0.0	0.36	9.59
0.03	0.03	.365E+02	0.1	0.49	7.00
0.04	0.04	.503E+02	0.1	0.60	5.66
0.05	0.05	.641E+02	0.2	0.71	4.81
0.06	0.06	.779E+02	0.3	0.81	4.23
0.06	0.06	.917E+02	0.4	0.90	3.79
0.07	0.07	.105E+03	0.5	0.99	3.46
0.08	0.08	.119E+03	0.6	1.07	3.19
0.09	0.09	.133E+03	0.7	1.15	2.96
0.09	0.09	.147E+03	0.9	1.23	2.77
0.10	0.10	.161E+03	1.0	1.31	2.61
0.11	0.11	.174E+03	1.2	1.38	2.47
0.12	0.12	.188E+03	1.3	1.45	2.35
0.13	0.13	.202E+03	1.5	1.52	2.24
0.13	0.13	.216E+03	1.7	1.59	2.15
0.14	0.14	.230E+03	1.9	1.66	2.06
0.15	0.15	.243E+03	2.0	1.73	1.98

	AREA (ha)	<-- hydrograph --> QPEAK (cms)	TPEAK (hrs)	R.V. (mm)	<-pipe / channel-> MAX DEPTH (m)	MAX VEL (m/s)
INFLOW : ID= 2 (0018)	11.41	1.66	9.33	56.27	0.13	1.59
OUTFLOW: ID= 1 (22061)	11.41	1.64	9.33	56.26	0.13	1.58

ADD HYD (22060)
1 + 2 = 3

	AREA (ha)	QPEAK (cms)	TPEAK (hrs)	R.V. (mm)
ID1= 1 (2206):	0.33	0.143	9.17	96.89
+ ID2= 2 (22061):	11.41	1.643	9.33	56.26
ID = 3 (22060):	11.74	1.701	9.33	57.40

NOTE: PEAK FLOWS DO NOT INCLUDE BASEFLOWS IF ANY.

CALIB
STANDHYD (2205)
ID= 1 DT= 5.0 min

Area (ha)= 0.83
Total Imp(%)= 83.00 Dir. Conn.(%)= 82.00

		IMPERVIOUS	PERVIOUS (i)
Surface Area	(ha)=	0.69	0.14
Dep. Storage	(mm)=	1.00	1.50
Average Slope	(%)=	1.00	2.00
Length	(m)=	74.39	40.00
Mannings n	=	0.013	0.250

NOTE: RAINFALL WAS TRANSFORMED TO 5.0 MIN. TIME STEP.

---- TRANSFORMED HYETOGRAPH ----

TIME hrs	RAIN mm/hr	TIME hrs	RAIN mm/hr	TIME hrs	RAIN mm/hr	TIME hrs	RAIN mm/hr
0.083	0.52	6.083	1.53	12.083	2.53	18.08	0.83
0.167	0.52	6.167	1.53	12.167	2.53	18.17	0.83
0.250	0.53	6.250	1.63	12.250	2.39	18.25	0.82
0.333	0.53	6.333	1.63	12.333	2.39	18.33	0.82
0.417	0.54	6.417	1.73	12.417	2.26	18.42	0.80
0.500	0.54	6.500	1.73	12.500	2.26	18.50	0.80
0.583	0.55	6.583	1.85	12.583	2.15	18.58	0.79
0.667	0.55	6.667	1.85	12.667	2.15	18.67	0.79
0.750	0.56	6.750	2.00	12.750	2.04	18.75	0.77
0.833	0.56	6.833	2.00	12.833	2.04	18.83	0.77
0.917	0.57	6.917	2.16	12.917	1.95	18.92	0.76
1.000	0.57	7.000	2.16	13.000	1.95	19.00	0.76
1.083	0.58	7.083	2.35	13.083	1.87	19.08	0.75
1.167	0.58	7.167	2.35	13.167	1.87	19.17	0.75
1.250	0.60	7.250	2.59	13.250	1.79	19.25	0.74
1.333	0.60	7.333	2.59	13.333	1.79	19.33	0.74
1.417	0.61	7.417	2.87	13.417	1.72	19.42	0.73
1.500	0.61	7.500	2.87	13.500	1.72	19.50	0.73
1.583	0.62	7.583	3.23	13.583	1.65	19.58	0.72
1.667	0.62	7.667	3.23	13.667	1.65	19.67	0.72
1.750	0.63	7.750	3.69	13.750	1.59	19.75	0.71
1.833	0.63	7.833	3.69	13.833	1.59	19.83	0.71
1.917	0.65	7.917	4.30	13.917	1.54	19.92	0.69
2.000	0.65	8.000	4.30	14.000	1.54	20.00	0.69
2.083	0.66	8.083	5.16	14.083	1.48	20.08	0.68
2.167	0.66	8.167	5.16	14.167	1.48	20.17	0.68
2.250	0.68	8.250	6.42	14.250	1.44	20.25	0.68
2.333	0.68	8.333	6.42	14.333	1.44	20.33	0.68
2.417	0.70	8.417	8.44	14.417	1.39	20.42	0.67
2.500	0.70	8.500	8.44	14.500	1.39	20.50	0.67
2.583	0.71	8.583	12.12	14.583	1.35	20.58	0.66
2.667	0.71	8.667	12.12	14.667	1.35	20.67	0.66
2.750	0.73	8.750	20.49	14.750	1.31	20.75	0.65
2.833	0.73	8.833	20.49	14.833	1.31	20.83	0.65
2.917	0.75	8.917	51.45	14.917	1.27	20.92	0.64
3.000	0.75	9.000	51.45	15.000	1.27	21.00	0.64
3.083	0.77	9.083	157.29	15.083	1.24	21.08	0.63
3.167	0.77	9.167	157.29	15.167	1.24	21.17	0.63
3.250	0.79	9.250	62.45	15.250	1.20	21.25	0.62
3.333	0.79	9.333	62.45	15.333	1.20	21.33	0.62
3.417	0.81	9.417	31.10	15.417	1.17	21.42	0.61
3.500	0.81	9.500	31.10	15.500	1.17	21.50	0.61
3.583	0.84	9.583	19.70	15.583	1.14	21.58	0.61
3.667	0.84	9.667	19.70	15.667	1.14	21.67	0.61
3.750	0.86	9.750	14.09	15.750	1.11	21.75	0.60
3.833	0.86	9.833	14.09	15.833	1.11	21.83	0.60
3.917	0.89	9.917	10.83	15.917	1.09	21.92	0.59
4.000	0.89	10.000	10.83	16.000	1.09	22.00	0.59
4.083	0.92	10.083	8.74	16.083	1.06	22.08	0.58
4.167	0.92	10.167	8.74	16.167	1.06	22.17	0.58
4.250	0.95	10.250	7.30	16.250	1.04	22.25	0.58
4.333	0.95	10.333	7.30	16.333	1.04	22.33	0.58
4.417	0.98	10.417	6.25	16.417	1.01	22.42	0.57
4.500	0.98	10.500	6.25	16.500	1.01	22.50	0.57
4.583	1.02	10.583	5.46	16.583	0.99	22.58	0.56
4.667	1.02	10.667	5.46	16.667	0.99	22.67	0.56
4.750	1.06	10.750	4.84	16.750	0.97	22.75	0.56
4.833	1.06	10.833	4.84	16.833	0.97	22.83	0.56

4.917	1.10	10.917	4.35	16.917	0.95	22.92	0.55
5.000	1.10	11.000	4.35	17.000	0.95	23.00	0.55
5.083	1.15	11.083	3.94	17.083	0.93	23.08	0.55
5.167	1.15	11.167	3.94	17.167	0.93	23.17	0.55
5.250	1.20	11.250	3.61	17.250	0.91	23.25	0.54
5.333	1.20	11.333	3.61	17.333	0.91	23.33	0.54
5.417	1.25	11.417	3.32	17.417	0.89	23.42	0.53
5.500	1.25	11.500	3.32	17.500	0.89	23.50	0.53
5.583	1.31	11.583	3.08	17.583	0.88	23.58	0.53
5.667	1.31	11.667	3.08	17.667	0.88	23.67	0.53
5.750	1.38	11.750	2.87	17.750	0.86	23.75	0.52
5.833	1.38	11.833	2.87	17.833	0.86	23.83	0.52
5.917	1.45	11.917	2.69	17.917	0.85	23.92	0.52
6.000	1.45	12.000	2.69	18.000	0.85	24.00	0.52

Max.Eff.Inten.(mm/hr)=	157.29	137.96	
over (min)	5.00	5.00	
Storage Coeff. (min)=	1.78 (ii)	4.92 (ii)	
Unit Hyd. Tpeak (min)=	5.00	5.00	
Unit Hyd. peak (cms)=	0.32	0.22	
			TOTALS
PEAK FLOW (cms)=	0.30	0.05	0.346 (iii)
TIME TO PEAK (hrs)=	9.17	9.17	9.17
RUNOFF VOLUME (mm)=	97.20	75.88	93.36
TOTAL RAINFALL (mm)=	98.20	98.20	98.20
RUNOFF COEFFICIENT =	0.99	0.77	0.95

***** WARNING: STORAGE COEFF. IS SMALLER THAN TIME STEP!

(i) CN PROCEDURE SELECTED FOR PERVIOUS LOSSES:
CN* = 90.0 Ia = Dep. Storage (Above)
(ii) TIME STEP (DT) SHOULD BE SMALLER OR EQUAL
THAN THE STORAGE COEFFICIENT.
(iii) PEAK FLOW DOES NOT INCLUDE BASEFLOW IF ANY.

ADD HYD (0017)		AREA	QPEAK	TPEAK	R.V.
		(ha)	(cms)	(hrs)	(mm)
ID1= 1 (2205):		0.83	0.346	9.17	93.36
+ ID2= 2 (22060):		11.74	1.701	9.33	57.40
ID = 3 (0017):		12.57	1.846	9.33	59.77

NOTE: PEAK FLOWS DO NOT INCLUDE BASEFLOWS IF ANY.

ROUTE CHN(22031)	IN= 2---> OUT= 1	Routing time step (min)'= 5.00

<------ DATA FOR SECTION (1.1) ------>

Distance	Elevation	Manning	
0.00	0.15	0.0110	
0.01	0.00	0.0110 /0.0110	Main Channel
4.26	0.02	0.0110	Main Channel
8.51	0.00	0.0110 /0.0110	Main Channel
8.52	0.15	0.0110	

<---------- TRAVEL TIME TABLE ---------->

DEPTH (m)	ELEV (m)	VOLUME (cu.m.)	FLOW RATE (cms)	VELOCITY (m/s)	TRAV.TIME (min)
0.01	0.01	.107E+01	0.0	0.16	8.90

0.02	0.02	.427E+01	0.0	0.25	5.60
0.02	0.02	.951E+01	0.0	0.36	4.01
0.03	0.03	.153E+02	0.1	0.49	2.92
0.04	0.04	.210E+02	0.1	0.60	2.36
0.05	0.05	.268E+02	0.2	0.71	2.01
0.06	0.06	.325E+02	0.3	0.81	1.77
0.06	0.06	.383E+02	0.4	0.90	1.58
0.07	0.07	.440E+02	0.5	0.99	1.44
0.08	0.08	.498E+02	0.6	1.07	1.33
0.09	0.09	.556E+02	0.7	1.15	1.24
0.09	0.09	.613E+02	0.9	1.23	1.16
0.10	0.10	.671E+02	1.0	1.31	1.09
0.11	0.11	.728E+02	1.2	1.38	1.03
0.12	0.12	.786E+02	1.3	1.45	0.98
0.13	0.13	.844E+02	1.5	1.52	0.94
0.13	0.13	.901E+02	1.7	1.59	0.90
0.14	0.14	.959E+02	1.9	1.66	0.86
0.15	0.15	.102E+03	2.0	1.73	0.83

	<---- hydrograph ---->			<-pipe / channel->	
	AREA (ha)	QPEAK (cms)	TPEAK (hrs)	R.V. (mm)	MAX DEPTH (m)	MAX VEL (m/s)
INFLOW : ID= 2 (0017)	12.57	1.85	9.33	59.77	0.14	1.66
OUTFLOW: ID= 1 (22031)	12.57	1.86	9.25	59.77	0.14	1.66

ADD HYD (22030)		AREA (ha)	QPEAK (cms)	TPEAK (hrs)	R.V. (mm)
1 + 2 = 3	ID1= 1 (2203):	0.17	0.074	9.17	96.56
	+ ID2= 2 (22031):	12.57	1.862	9.25	59.77
	ID = 3 (22030):	12.74	1.893	9.25	60.26

NOTE: PEAK FLOWS DO NOT INCLUDE BASEFLOWS IF ANY.

CALIB
STANDHYD (2201) | Area (ha)= 1.54
ID= 1 DT= 5.0 min | Total Imp(%)= 44.00 Dir. Conn.(%)= 28.00

		IMPERVIOUS	PERVIOUS (i)
Surface Area	(ha)=	0.68	0.86
Dep. Storage	(mm)=	1.00	1.50
Average Slope	(%)=	1.00	2.00
Length	(m)=	101.32	40.00
Mannings n	=	0.013	0.250

NOTE: RAINFALL WAS TRANSFORMED TO 5.0 MIN. TIME STEP.

---- TRANSFORMED HYETOGRAPH ----

TIME hrs	RAIN mm/hr	TIME hrs	RAIN mm/hr	TIME hrs	RAIN mm/hr	TIME hrs	RAIN mm/hr
0.083	0.52	6.083	1.53	12.083	2.53	18.08	0.83
0.167	0.52	6.167	1.53	12.167	2.53	18.17	0.83
0.250	0.53	6.250	1.63	12.250	2.39	18.25	0.82
0.333	0.53	6.333	1.63	12.333	2.39	18.33	0.82
0.417	0.54	6.417	1.73	12.417	2.26	18.42	0.80
0.500	0.54	6.500	1.73	12.500	2.26	18.50	0.80

0.583	0.55	6.583	1.85	12.583	2.15	18.58	0.79
0.667	0.55	6.667	1.85	12.667	2.15	18.67	0.79
0.750	0.56	6.750	2.00	12.750	2.04	18.75	0.77
0.833	0.56	6.833	2.00	12.833	2.04	18.83	0.77
0.917	0.57	6.917	2.16	12.917	1.95	18.92	0.76
1.000	0.57	7.000	2.16	13.000	1.95	19.00	0.76
1.083	0.58	7.083	2.35	13.083	1.87	19.08	0.75
1.167	0.58	7.167	2.35	13.167	1.87	19.17	0.75
1.250	0.60	7.250	2.59	13.250	1.79	19.25	0.74
1.333	0.60	7.333	2.59	13.333	1.79	19.33	0.74
1.417	0.61	7.417	2.87	13.417	1.72	19.42	0.73
1.500	0.61	7.500	2.87	13.500	1.72	19.50	0.73
1.583	0.62	7.583	3.23	13.583	1.65	19.58	0.72
1.667	0.62	7.667	3.23	13.667	1.65	19.67	0.72
1.750	0.63	7.750	3.69	13.750	1.59	19.75	0.71
1.833	0.63	7.833	3.69	13.833	1.59	19.83	0.71
1.917	0.65	7.917	4.30	13.917	1.54	19.92	0.69
2.000	0.65	8.000	4.30	14.000	1.54	20.00	0.69
2.083	0.66	8.083	5.16	14.083	1.48	20.08	0.68
2.167	0.66	8.167	5.16	14.167	1.48	20.17	0.68
2.250	0.68	8.250	6.42	14.250	1.44	20.25	0.68
2.333	0.68	8.333	6.42	14.333	1.44	20.33	0.68
2.417	0.70	8.417	8.44	14.417	1.39	20.42	0.67
2.500	0.70	8.500	8.44	14.500	1.39	20.50	0.67
2.583	0.71	8.583	12.12	14.583	1.35	20.58	0.66
2.667	0.71	8.667	12.12	14.667	1.35	20.67	0.66
2.750	0.73	8.750	20.49	14.750	1.31	20.75	0.65
2.833	0.73	8.833	20.49	14.833	1.31	20.83	0.65
2.917	0.75	8.917	51.45	14.917	1.27	20.92	0.64
3.000	0.75	9.000	51.45	15.000	1.27	21.00	0.64
3.083	0.77	9.083	157.29	15.083	1.24	21.08	0.63
3.167	0.77	9.167	157.29	15.167	1.24	21.17	0.63
3.250	0.79	9.250	62.45	15.250	1.20	21.25	0.62
3.333	0.79	9.333	62.45	15.333	1.20	21.33	0.62
3.417	0.81	9.417	31.10	15.417	1.17	21.42	0.61
3.500	0.81	9.500	31.10	15.500	1.17	21.50	0.61
3.583	0.84	9.583	19.70	15.583	1.14	21.58	0.61
3.667	0.84	9.667	19.70	15.667	1.14	21.67	0.61
3.750	0.86	9.750	14.09	15.750	1.11	21.75	0.60
3.833	0.86	9.833	14.09	15.833	1.11	21.83	0.60
3.917	0.89	9.917	10.83	15.917	1.09	21.92	0.59
4.000	0.89	10.000	10.83	16.000	1.09	22.00	0.59
4.083	0.92	10.083	8.74	16.083	1.06	22.08	0.58
4.167	0.92	10.167	8.74	16.167	1.06	22.17	0.58
4.250	0.95	10.250	7.30	16.250	1.04	22.25	0.58
4.333	0.95	10.333	7.30	16.333	1.04	22.33	0.58
4.417	0.98	10.417	6.25	16.417	1.01	22.42	0.57
4.500	0.98	10.500	6.25	16.500	1.01	22.50	0.57
4.583	1.02	10.583	5.46	16.583	0.99	22.58	0.56
4.667	1.02	10.667	5.46	16.667	0.99	22.67	0.56
4.750	1.06	10.750	4.84	16.750	0.97	22.75	0.56
4.833	1.06	10.833	4.84	16.833	0.97	22.83	0.56
4.917	1.10	10.917	4.35	16.917	0.95	22.92	0.55
5.000	1.10	11.000	4.35	17.000	0.95	23.00	0.55
5.083	1.15	11.083	3.94	17.083	0.93	23.08	0.55
5.167	1.15	11.167	3.94	17.167	0.93	23.17	0.55
5.250	1.20	11.250	3.61	17.250	0.91	23.25	0.54
5.333	1.20	11.333	3.61	17.333	0.91	23.33	0.54
5.417	1.25	11.417	3.32	17.417	0.89	23.42	0.53
5.500	1.25	11.500	3.32	17.500	0.89	23.50	0.53
5.583	1.31	11.583	3.08	17.583	0.88	23.58	0.53
5.667	1.31	11.667	3.08	17.667	0.88	23.67	0.53
5.750	1.38	11.750	2.87	17.750	0.86	23.75	0.52
5.833	1.38	11.833	2.87	17.833	0.86	23.83	0.52

```
              5.917    1.45 |11.917    2.69 |17.917    0.85 | 23.92    0.52
              6.000    1.45 |12.000    2.69 |18.000    0.85 | 24.00    0.52

     Max.Eff.Inten.(mm/hr)=     157.29       121.61
               over (min)         5.00        10.00
     Storage Coeff.  (min)=       2.15 (ii)    8.67 (ii)
     Unit Hyd. Tpeak (min)=       5.00        10.00
     Unit Hyd. peak  (cms)=       0.31         0.12
                                                          *TOTALS*
     PEAK FLOW       (cms)=       0.19         0.21          0.365 (iii)
     TIME TO PEAK    (hrs)=       9.17         9.25           9.17
     RUNOFF VOLUME    (mm)=      97.20        57.80          68.83
     TOTAL RAINFALL   (mm)=      98.20        98.20          98.20
     RUNOFF COEFFICIENT   =       0.99         0.59           0.70

***** WARNING: STORAGE COEFF. IS SMALLER THAN TIME STEP!

       (i) CN PROCEDURE SELECTED FOR PERVIOUS LOSSES:
            CN*  =  75.0    Ia = Dep. Storage  (Above)
      (ii) TIME STEP (DT) SHOULD BE SMALLER OR EQUAL
           THAN THE STORAGE COEFFICIENT.
     (iii) PEAK FLOW DOES NOT INCLUDE BASEFLOW IF ANY.

--------------------------------------------------------------------------------


--------------------
| ADD HYD  (  0016)|
|   1 +  2 =  3    |          AREA    QPEAK    TPEAK     R.V.
--------------------          (ha)    (cms)    (hrs)     (mm)
        ID1= 1 (  2201):     1.54   0.365     9.17    68.83
      + ID2= 2 ( 22030):    12.74   1.893     9.25    60.26
        ================================================
        ID = 3 (  0016):    14.28   2.184     9.25    61.19

     NOTE:  PEAK FLOWS DO NOT INCLUDE BASEFLOWS IF ANY.
--------------------------------------------------------------------------------
--------------------
| ROUTE CHN( 22021)|
| IN= 2---> OUT= 1 |     Routing time step (min)'=  5.00
--------------------
               <------ DATA FOR SECTION (   1.1) ------>
               Distance      Elevation       Manning
                   0.00          0.15         0.0110
                   0.01          0.00    0.0110 /0.0110  Main Channel
                   4.26          0.02         0.0110      Main Channel
                   8.51          0.00    0.0110 /0.0110  Main Channel
                   8.52          0.15         0.0110

      <--------------------- TRAVEL TIME TABLE ---------------------->
       DEPTH    ELEV      VOLUME    FLOW RATE    VELOCITY   TRAV.TIME
        (m)      (m)     (cu.m.)      (cms)        (m/s)      (min)
       0.01     0.01    .976E+00       0.0         0.16       8.13
       0.02     0.02    .390E+01       0.0         0.25       5.12
       0.02     0.02    .869E+01       0.0         0.36       3.66
       0.03     0.03    .139E+02       0.1         0.49       2.67
       0.04     0.04    .192E+02       0.1         0.60       2.16
       0.05     0.05    .245E+02       0.2         0.71       1.84
       0.06     0.06    .297E+02       0.3         0.81       1.61
       0.06     0.06    .350E+02       0.4         0.90       1.45
       0.07     0.07    .402E+02       0.5         0.99       1.32
       0.08     0.08    .455E+02       0.6         1.07       1.22
       0.09     0.09    .508E+02       0.7         1.15       1.13
       0.09     0.09    .560E+02       0.9         1.23       1.06
       0.10     0.10    .613E+02       1.0         1.31       1.00
```

0.11	0.11	.666E+02	1.2	1.38	0.94
0.12	0.12	.718E+02	1.3	1.45	0.90
0.13	0.13	.771E+02	1.5	1.52	0.86
0.13	0.13	.823E+02	1.7	1.59	0.82
0.14	0.14	.876E+02	1.9	1.66	0.79
0.15	0.15	.929E+02	2.0	1.73	0.76

**** WARNING: TRAVEL TIME TABLE EXCEEDED

	<---- hydrograph ---->				<-pipe / channel->	
	AREA (ha)	QPEAK (cms)	TPEAK (hrs)	R.V. (mm)	MAX DEPTH (m)	MAX VEL (m/s)
INFLOW : ID= 2 (0016)	14.28	2.18	9.25	61.19	0.14	1.67
OUTFLOW: ID= 1 (22021)	14.28	2.26	9.25	61.19	0.15	1.73

ADD HYD (22020)
1 + 2 = 3

	AREA (ha)	QPEAK (cms)	TPEAK (hrs)	R.V. (mm)
ID1= 1 (2202):	0.16	0.068	9.17	95.11
+ ID2= 2 (22021):	14.28	2.263	9.25	61.19
ID = 3 (22020):	14.44	2.293	9.25	61.56

NOTE: PEAK FLOWS DO NOT INCLUDE BASEFLOWS IF ANY.

ADD HYD (0015)
1 + 2 = 3

	AREA (ha)	QPEAK (cms)	TPEAK (hrs)	R.V. (mm)
ID1= 1 (22020):	14.44	2.293	9.25	61.56
+ ID2= 2 (2300):	0.23	0.010	9.50	22.87
ID = 3 (0015):	14.67	2.301	9.25	60.95

NOTE: PEAK FLOWS DO NOT INCLUDE BASEFLOWS IF ANY.

ROUTE CHN(22001)	
IN= 2---> OUT= 1	Routing time step (min)'= 5.00

<------ DATA FOR SECTION (1.1) ------>

Distance	Elevation	Manning	
0.00	0.15	0.0110	
0.01	0.00	0.0110 /0.0110	Main Channel
4.26	0.02	0.0110	Main Channel
8.51	0.00	0.0110 /0.0110	Main Channel
8.52	0.15	0.0110	

<---------- TRAVEL TIME TABLE ---------->

DEPTH (m)	ELEV (m)	VOLUME (cu.m.)	FLOW RATE (cms)	VELOCITY (m/s)	TRAV.TIME (min)
0.01	0.01	.692E+00	0.0	0.16	5.76
0.02	0.02	.277E+01	0.0	0.25	3.63
0.02	0.02	.616E+01	0.0	0.36	2.59
0.03	0.03	.989E+01	0.1	0.49	1.89
0.04	0.04	.136E+02	0.1	0.60	1.53
0.05	0.05	.173E+02	0.2	0.71	1.30
0.06	0.06	.211E+02	0.3	0.81	1.14
0.06	0.06	.248E+02	0.4	0.90	1.03

0.07	0.07	.285E+02	0.5	0.99	0.93
0.08	0.08	.323E+02	0.6	1.07	0.86
0.09	0.09	.360E+02	0.7	1.15	0.80
0.09	0.09	.397E+02	0.9	1.23	0.75
0.10	0.10	.434E+02	1.0	1.31	0.71
0.11	0.11	.472E+02	1.2	1.38	0.67
0.12	0.12	.509E+02	1.3	1.45	0.64
0.13	0.13	.546E+02	1.5	1.52	0.61
0.13	0.13	.584E+02	1.7	1.59	0.58
0.14	0.14	.621E+02	1.9	1.66	0.56
0.15	0.15	.658E+02	2.0	1.73	0.54

**** WARNING: TRAVEL TIME TABLE EXCEEDED

	<---- hydrograph ---->			<-pipe / channel->	
	AREA (ha)	QPEAK (cms)	TPEAK (hrs)	R.V. (mm)	MAX DEPTH (m)	MAX VEL (m/s)
INFLOW : ID= 2 (0015)	14.67	2.30	9.25	60.95	0.13	1.55
OUTFLOW: ID= 1 (22001)	14.67	2.32	9.25	60.95	0.14	1.63

CALIB STANDHYD (2200) ID= 1 DT= 5.0 min	Area (ha)= 0.11 Total Imp(%)= 86.00 Dir. Conn.(%)= 86.00

		IMPERVIOUS	PERVIOUS (i)
Surface Area	(ha)=	0.09	0.02
Dep. Storage	(mm)=	1.00	1.50
Average Slope	(%)=	1.00	2.00
Length	(m)=	27.08	40.00
Mannings n	=	0.013	0.250

NOTE: RAINFALL WAS TRANSFORMED TO 5.0 MIN. TIME STEP.

---- TRANSFORMED HYETOGRAPH ----

TIME hrs	RAIN mm/hr	TIME hrs	RAIN mm/hr	TIME hrs	RAIN mm/hr	TIME hrs	RAIN mm/hr
0.083	0.52	6.083	1.53	12.083	2.53	18.08	0.83
0.167	0.52	6.167	1.53	12.167	2.53	18.17	0.83
0.250	0.53	6.250	1.63	12.250	2.39	18.25	0.82
0.333	0.53	6.333	1.63	12.333	2.39	18.33	0.82
0.417	0.54	6.417	1.73	12.417	2.26	18.42	0.80
0.500	0.54	6.500	1.73	12.500	2.26	18.50	0.80
0.583	0.55	6.583	1.85	12.583	2.15	18.58	0.79
0.667	0.55	6.667	1.85	12.667	2.15	18.67	0.79
0.750	0.56	6.750	2.00	12.750	2.04	18.75	0.77
0.833	0.56	6.833	2.00	12.833	2.04	18.83	0.77
0.917	0.57	6.917	2.16	12.917	1.95	18.92	0.76
1.000	0.57	7.000	2.16	13.000	1.95	19.00	0.76
1.083	0.58	7.083	2.35	13.083	1.87	19.08	0.75
1.167	0.58	7.167	2.35	13.167	1.87	19.17	0.75
1.250	0.60	7.250	2.59	13.250	1.79	19.25	0.74
1.333	0.60	7.333	2.59	13.333	1.79	19.33	0.74
1.417	0.61	7.417	2.87	13.417	1.72	19.42	0.73
1.500	0.61	7.500	2.87	13.500	1.72	19.50	0.73
1.583	0.62	7.583	3.23	13.583	1.65	19.58	0.72
1.667	0.62	7.667	3.23	13.667	1.65	19.67	0.72
1.750	0.63	7.750	3.69	13.750	1.59	19.75	0.71
1.833	0.63	7.833	3.69	13.833	1.59	19.83	0.71
1.917	0.65	7.917	4.30	13.917	1.54	19.92	0.69
2.000	0.65	8.000	4.30	14.000	1.54	20.00	0.69

2.083	0.66	8.083	5.16	14.083	1.48	20.08	0.68
2.167	0.66	8.167	5.16	14.167	1.48	20.17	0.68
2.250	0.68	8.250	6.42	14.250	1.44	20.25	0.68
2.333	0.68	8.333	6.42	14.333	1.44	20.33	0.68
2.417	0.70	8.417	8.44	14.417	1.39	20.42	0.67
2.500	0.70	8.500	8.44	14.500	1.39	20.50	0.67
2.583	0.71	8.583	12.12	14.583	1.35	20.58	0.66
2.667	0.71	8.667	12.12	14.667	1.35	20.67	0.66
2.750	0.73	8.750	20.49	14.750	1.31	20.75	0.65
2.833	0.73	8.833	20.49	14.833	1.31	20.83	0.65
2.917	0.75	8.917	51.45	14.917	1.27	20.92	0.64
3.000	0.75	9.000	51.45	15.000	1.27	21.00	0.64
3.083	0.77	9.083	157.29	15.083	1.24	21.08	0.63
3.167	0.77	9.167	157.29	15.167	1.24	21.17	0.63
3.250	0.79	9.250	62.45	15.250	1.20	21.25	0.62
3.333	0.79	9.333	62.45	15.333	1.20	21.33	0.62
3.417	0.81	9.417	31.10	15.417	1.17	21.42	0.61
3.500	0.81	9.500	31.10	15.500	1.17	21.50	0.61
3.583	0.84	9.583	19.70	15.583	1.14	21.58	0.61
3.667	0.84	9.667	19.70	15.667	1.14	21.67	0.61
3.750	0.86	9.750	14.09	15.750	1.11	21.75	0.60
3.833	0.86	9.833	14.09	15.833	1.11	21.83	0.60
3.917	0.89	9.917	10.83	15.917	1.09	21.92	0.59
4.000	0.89	10.000	10.83	16.000	1.09	22.00	0.59
4.083	0.92	10.083	8.74	16.083	1.06	22.08	0.58
4.167	0.92	10.167	8.74	16.167	1.06	22.17	0.58
4.250	0.95	10.250	7.30	16.250	1.04	22.25	0.58
4.333	0.95	10.333	7.30	16.333	1.04	22.33	0.58
4.417	0.98	10.417	6.25	16.417	1.01	22.42	0.57
4.500	0.98	10.500	6.25	16.500	1.01	22.50	0.57
4.583	1.02	10.583	5.46	16.583	0.99	22.58	0.56
4.667	1.02	10.667	5.46	16.667	0.99	22.67	0.56
4.750	1.06	10.750	4.84	16.750	0.97	22.75	0.56
4.833	1.06	10.833	4.84	16.833	0.97	22.83	0.56
4.917	1.10	10.917	4.35	16.917	0.95	22.92	0.55
5.000	1.10	11.000	4.35	17.000	0.95	23.00	0.55
5.083	1.15	11.083	3.94	17.083	0.93	23.08	0.55
5.167	1.15	11.167	3.94	17.167	0.93	23.17	0.55
5.250	1.20	11.250	3.61	17.250	0.91	23.25	0.54
5.333	1.20	11.333	3.61	17.333	0.91	23.33	0.54
5.417	1.25	11.417	3.32	17.417	0.89	23.42	0.53
5.500	1.25	11.500	3.32	17.500	0.89	23.50	0.53
5.583	1.31	11.583	3.08	17.583	0.88	23.58	0.53
5.667	1.31	11.667	3.08	17.667	0.88	23.67	0.53
5.750	1.38	11.750	2.87	17.750	0.86	23.75	0.52
5.833	1.38	11.833	2.87	17.833	0.86	23.83	0.52
5.917	1.45	11.917	2.69	17.917	0.85	23.92	0.52
6.000	1.45	12.000	2.69	18.000	0.85	24.00	0.52

Max.Eff.Inten.(mm/hr)=	157.29	154.91	
over (min)	5.00	5.00	
Storage Coeff. (min)=	0.97 (ii)	3.82 (ii)	
Unit Hyd. Tpeak (min)=	5.00	5.00	
Unit Hyd. peak (cms)=	0.34	0.25	
			TOTALS
PEAK FLOW (cms)=	0.04	0.01	0.048 (iii)
TIME TO PEAK (hrs)=	9.17	9.17	9.17
RUNOFF VOLUME (mm)=	97.20	91.78	96.44
TOTAL RAINFALL (mm)=	98.20	98.20	98.20
RUNOFF COEFFICIENT =	0.99	0.93	0.98

***** WARNING: STORAGE COEFF. IS SMALLER THAN TIME STEP!

(i) CN PROCEDURE SELECTED FOR PERVIOUS LOSSES:

CN* = 98.0 Ia = Dep. Storage (Above)
(ii) TIME STEP (DT) SHOULD BE SMALLER OR EQUAL THAN THE STORAGE COEFFICIENT.
(iii) PEAK FLOW DOES NOT INCLUDE BASEFLOW IF ANY.

ADD HYD (22000)		AREA (ha)	QPEAK (cms)	TPEAK (hrs)	R.V. (mm)
1 + 2 = 3	ID1= 1 (2200):	0.11	0.048	9.17	96.44
	+ ID2= 2 (22001):	14.67	2.319	9.25	60.95
	ID = 3 (22000):	14.78	2.339	9.25	61.22

NOTE: PEAK FLOWS DO NOT INCLUDE BASEFLOWS IF ANY.

CALIB					
NASHYD (2600)	Area (ha)=	2.14	Curve Number (CN)=	77.0	
ID= 1 DT= 5.0 min	Ia (mm)=	5.00	# of Linear Res.(N)=	3.00	
	U.H. Tp(hrs)=	0.28			

NOTE: RAINFALL WAS TRANSFORMED TO 5.0 MIN. TIME STEP.

---- TRANSFORMED HYETOGRAPH ----

TIME hrs	RAIN mm/hr	TIME hrs	RAIN mm/hr	TIME hrs	RAIN mm/hr	TIME hrs	RAIN mm/hr
0.083	0.52	6.083	1.53	12.083	2.53	18.08	0.83
0.167	0.52	6.167	1.53	12.167	2.53	18.17	0.83
0.250	0.53	6.250	1.63	12.250	2.39	18.25	0.82
0.333	0.53	6.333	1.63	12.333	2.39	18.33	0.82
0.417	0.54	6.417	1.73	12.417	2.26	18.42	0.80
0.500	0.54	6.500	1.73	12.500	2.26	18.50	0.80
0.583	0.55	6.583	1.85	12.583	2.15	18.58	0.79
0.667	0.55	6.667	1.85	12.667	2.15	18.67	0.79
0.750	0.56	6.750	2.00	12.750	2.04	18.75	0.77
0.833	0.56	6.833	2.00	12.833	2.04	18.83	0.77
0.917	0.57	6.917	2.16	12.917	1.95	18.92	0.76
1.000	0.57	7.000	2.16	13.000	1.95	19.00	0.76
1.083	0.58	7.083	2.35	13.083	1.87	19.08	0.75
1.167	0.58	7.167	2.35	13.167	1.87	19.17	0.75
1.250	0.60	7.250	2.59	13.250	1.79	19.25	0.74
1.333	0.60	7.333	2.59	13.333	1.79	19.33	0.74
1.417	0.61	7.417	2.87	13.417	1.72	19.42	0.73
1.500	0.61	7.500	2.87	13.500	1.72	19.50	0.73
1.583	0.62	7.583	3.23	13.583	1.65	19.58	0.72
1.667	0.62	7.667	3.23	13.667	1.65	19.67	0.72
1.750	0.63	7.750	3.69	13.750	1.59	19.75	0.71
1.833	0.63	7.833	3.69	13.833	1.59	19.83	0.71
1.917	0.65	7.917	4.30	13.917	1.54	19.92	0.69
2.000	0.65	8.000	4.30	14.000	1.54	20.00	0.69
2.083	0.66	8.083	5.16	14.083	1.48	20.08	0.68
2.167	0.66	8.167	5.16	14.167	1.48	20.17	0.68
2.250	0.68	8.250	6.42	14.250	1.44	20.25	0.68
2.333	0.68	8.333	6.42	14.333	1.44	20.33	0.68
2.417	0.70	8.417	8.44	14.417	1.39	20.42	0.67
2.500	0.70	8.500	8.44	14.500	1.39	20.50	0.67
2.583	0.71	8.583	12.12	14.583	1.35	20.58	0.66
2.667	0.71	8.667	12.12	14.667	1.35	20.67	0.66
2.750	0.73	8.750	20.49	14.750	1.31	20.75	0.65
2.833	0.73	8.833	20.49	14.833	1.31	20.83	0.65

2.917	0.75	8.917	51.45	14.917	1.27	20.92	0.64
3.000	0.75	9.000	51.45	15.000	1.27	21.00	0.64
3.083	0.77	9.083	157.29	15.083	1.24	21.08	0.63
3.167	0.77	9.167	157.29	15.167	1.24	21.17	0.63
3.250	0.79	9.250	62.45	15.250	1.20	21.25	0.62
3.333	0.79	9.333	62.45	15.333	1.20	21.33	0.62
3.417	0.81	9.417	31.10	15.417	1.17	21.42	0.61
3.500	0.81	9.500	31.10	15.500	1.17	21.50	0.61
3.583	0.84	9.583	19.70	15.583	1.14	21.58	0.61
3.667	0.84	9.667	19.70	15.667	1.14	21.67	0.61
3.750	0.86	9.750	14.09	15.750	1.11	21.75	0.60
3.833	0.86	9.833	14.09	15.833	1.11	21.83	0.60
3.917	0.89	9.917	10.83	15.917	1.09	21.92	0.59
4.000	0.89	10.000	10.83	16.000	1.09	22.00	0.59
4.083	0.92	10.083	8.74	16.083	1.06	22.08	0.58
4.167	0.92	10.167	8.74	16.167	1.06	22.17	0.58
4.250	0.95	10.250	7.30	16.250	1.04	22.25	0.58
4.333	0.95	10.333	7.30	16.333	1.04	22.33	0.58
4.417	0.98	10.417	6.25	16.417	1.01	22.42	0.57
4.500	0.98	10.500	6.25	16.500	1.01	22.50	0.57
4.583	1.02	10.583	5.46	16.583	0.99	22.58	0.56
4.667	1.02	10.667	5.46	16.667	0.99	22.67	0.56
4.750	1.06	10.750	4.84	16.750	0.97	22.75	0.56
4.833	1.06	10.833	4.84	16.833	0.97	22.83	0.56
4.917	1.10	10.917	4.35	16.917	0.95	22.92	0.55
5.000	1.10	11.000	4.35	17.000	0.95	23.00	0.55
5.083	1.15	11.083	3.94	17.083	0.93	23.08	0.55
5.167	1.15	11.167	3.94	17.167	0.93	23.17	0.55
5.250	1.20	11.250	3.61	17.250	0.91	23.25	0.54
5.333	1.20	11.333	3.61	17.333	0.91	23.33	0.54
5.417	1.25	11.417	3.32	17.417	0.89	23.42	0.53
5.500	1.25	11.500	3.32	17.500	0.89	23.50	0.53
5.583	1.31	11.583	3.08	17.583	0.88	23.58	0.53
5.667	1.31	11.667	3.08	17.667	0.88	23.67	0.53
5.750	1.38	11.750	2.87	17.750	0.86	23.75	0.52
5.833	1.38	11.833	2.87	17.833	0.86	23.83	0.52
5.917	1.45	11.917	2.69	17.917	0.85	23.92	0.52
6.000	1.45	12.000	2.69	18.000	0.85	24.00	0.52

Unit Hyd Qpeak (cms)= 0.292

PEAK FLOW (cms)= 0.246 (i)
TIME TO PEAK (hrs)= 9.417
RUNOFF VOLUME (mm)= 51.347
TOTAL RAINFALL (mm)= 98.197
RUNOFF COEFFICIENT = 0.523

(i) PEAK FLOW DOES NOT INCLUDE BASEFLOW IF ANY.

CALIB NASHYD (2700) ID= 1 DT= 5.0 min	Area (ha)= 6.38	Curve Number (CN)= 77.0
	Ia (mm)= 5.00	# of Linear Res.(N)= 3.00
	U.H. Tp(hrs)= 0.29	

NOTE: RAINFALL WAS TRANSFORMED TO 5.0 MIN. TIME STEP.

---- TRANSFORMED HYETOGRAPH ----

TIME hrs	RAIN mm/hr	TIME hrs	RAIN mm/hr	TIME hrs	RAIN mm/hr	TIME hrs	RAIN mm/hr
0.083	0.52	6.083	1.53	12.083	2.53	18.08	0.83
0.167	0.52	6.167	1.53	12.167	2.53	18.17	0.83

0.250	0.53	6.250	1.63	12.250	2.39	18.25	0.82
0.333	0.53	6.333	1.63	12.333	2.39	18.33	0.82
0.417	0.54	6.417	1.73	12.417	2.26	18.42	0.80
0.500	0.54	6.500	1.73	12.500	2.26	18.50	0.80
0.583	0.55	6.583	1.85	12.583	2.15	18.58	0.79
0.667	0.55	6.667	1.85	12.667	2.15	18.67	0.79
0.750	0.56	6.750	2.00	12.750	2.04	18.75	0.77
0.833	0.56	6.833	2.00	12.833	2.04	18.83	0.77
0.917	0.57	6.917	2.16	12.917	1.95	18.92	0.76
1.000	0.57	7.000	2.16	13.000	1.95	19.00	0.76
1.083	0.58	7.083	2.35	13.083	1.87	19.08	0.75
1.167	0.58	7.167	2.35	13.167	1.87	19.17	0.75
1.250	0.60	7.250	2.59	13.250	1.79	19.25	0.74
1.333	0.60	7.333	2.59	13.333	1.79	19.33	0.74
1.417	0.61	7.417	2.87	13.417	1.72	19.42	0.73
1.500	0.61	7.500	2.87	13.500	1.72	19.50	0.73
1.583	0.62	7.583	3.23	13.583	1.65	19.58	0.72
1.667	0.62	7.667	3.23	13.667	1.65	19.67	0.72
1.750	0.63	7.750	3.69	13.750	1.59	19.75	0.71
1.833	0.63	7.833	3.69	13.833	1.59	19.83	0.71
1.917	0.65	7.917	4.30	13.917	1.54	19.92	0.69
2.000	0.65	8.000	4.30	14.000	1.54	20.00	0.69
2.083	0.66	8.083	5.16	14.083	1.48	20.08	0.68
2.167	0.66	8.167	5.16	14.167	1.48	20.17	0.68
2.250	0.68	8.250	6.42	14.250	1.44	20.25	0.68
2.333	0.68	8.333	6.42	14.333	1.44	20.33	0.68
2.417	0.70	8.417	8.44	14.417	1.39	20.42	0.67
2.500	0.70	8.500	8.44	14.500	1.39	20.50	0.67
2.583	0.71	8.583	12.12	14.583	1.35	20.58	0.66
2.667	0.71	8.667	12.12	14.667	1.35	20.67	0.66
2.750	0.73	8.750	20.49	14.750	1.31	20.75	0.65
2.833	0.73	8.833	20.49	14.833	1.31	20.83	0.65
2.917	0.75	8.917	51.45	14.917	1.27	20.92	0.64
3.000	0.75	9.000	51.45	15.000	1.27	21.00	0.64
3.083	0.77	9.083	157.29	15.083	1.24	21.08	0.63
3.167	0.77	9.167	157.29	15.167	1.24	21.17	0.63
3.250	0.79	9.250	62.45	15.250	1.20	21.25	0.62
3.333	0.79	9.333	62.45	15.333	1.20	21.33	0.62
3.417	0.81	9.417	31.10	15.417	1.17	21.42	0.61
3.500	0.81	9.500	31.10	15.500	1.17	21.50	0.61
3.583	0.84	9.583	19.70	15.583	1.14	21.58	0.61
3.667	0.84	9.667	19.70	15.667	1.14	21.67	0.61
3.750	0.86	9.750	14.09	15.750	1.11	21.75	0.60
3.833	0.86	9.833	14.09	15.833	1.11	21.83	0.60
3.917	0.89	9.917	10.83	15.917	1.09	21.92	0.59
4.000	0.89	10.000	10.83	16.000	1.09	22.00	0.59
4.083	0.92	10.083	8.74	16.083	1.06	22.08	0.58
4.167	0.92	10.167	8.74	16.167	1.06	22.17	0.58
4.250	0.95	10.250	7.30	16.250	1.04	22.25	0.58
4.333	0.95	10.333	7.30	16.333	1.04	22.33	0.58
4.417	0.98	10.417	6.25	16.417	1.01	22.42	0.57
4.500	0.98	10.500	6.25	16.500	1.01	22.50	0.57
4.583	1.02	10.583	5.46	16.583	0.99	22.58	0.56
4.667	1.02	10.667	5.46	16.667	0.99	22.67	0.56
4.750	1.06	10.750	4.84	16.750	0.97	22.75	0.56
4.833	1.06	10.833	4.84	16.833	0.97	22.83	0.56
4.917	1.10	10.917	4.35	16.917	0.95	22.92	0.55
5.000	1.10	11.000	4.35	17.000	0.95	23.00	0.55
5.083	1.15	11.083	3.94	17.083	0.93	23.08	0.55
5.167	1.15	11.167	3.94	17.167	0.93	23.17	0.55
5.250	1.20	11.250	3.61	17.250	0.91	23.25	0.54
5.333	1.20	11.333	3.61	17.333	0.91	23.33	0.54
5.417	1.25	11.417	3.32	17.417	0.89	23.42	0.53
5.500	1.25	11.500	3.32	17.500	0.89	23.50	0.53

5.583	1.31	11.583	3.08	17.583	0.88	23.58	0.53
5.667	1.31	11.667	3.08	17.667	0.88	23.67	0.53
5.750	1.38	11.750	2.87	17.750	0.86	23.75	0.52
5.833	1.38	11.833	2.87	17.833	0.86	23.83	0.52
5.917	1.45	11.917	2.69	17.917	0.85	23.92	0.52
6.000	1.45	12.000	2.69	18.000	0.85	24.00	0.52

Unit Hyd Qpeak (cms)= 0.840

PEAK FLOW (cms)= 0.717 (i)
TIME TO PEAK (hrs)= 9.417
RUNOFF VOLUME (mm)= 51.351
TOTAL RAINFALL (mm)= 98.197
RUNOFF COEFFICIENT = 0.523

(i) PEAK FLOW DOES NOT INCLUDE BASEFLOW IF ANY.

CALIB NASHYD (2701) ID= 1 DT= 5.0 min	Area (ha)= 4.55	Curve Number (CN)= 75.0
	Ia (mm)= 5.00	# of Linear Res.(N)= 3.00
	U.H. Tp(hrs)= 0.50	

NOTE: RAINFALL WAS TRANSFORMED TO 5.0 MIN. TIME STEP.

---- TRANSFORMED HYETOGRAPH ----

TIME hrs	RAIN mm/hr	TIME hrs	RAIN mm/hr	TIME hrs	RAIN mm/hr	TIME hrs	RAIN mm/hr
0.083	0.52	6.083	1.53	12.083	2.53	18.08	0.83
0.167	0.52	6.167	1.53	12.167	2.53	18.17	0.83
0.250	0.53	6.250	1.63	12.250	2.39	18.25	0.82
0.333	0.53	6.333	1.63	12.333	2.39	18.33	0.82
0.417	0.54	6.417	1.73	12.417	2.26	18.42	0.80
0.500	0.54	6.500	1.73	12.500	2.26	18.50	0.80
0.583	0.55	6.583	1.85	12.583	2.15	18.58	0.79
0.667	0.55	6.667	1.85	12.667	2.15	18.67	0.79
0.750	0.56	6.750	2.00	12.750	2.04	18.75	0.77
0.833	0.56	6.833	2.00	12.833	2.04	18.83	0.77
0.917	0.57	6.917	2.16	12.917	1.95	18.92	0.76
1.000	0.57	7.000	2.16	13.000	1.95	19.00	0.76
1.083	0.58	7.083	2.35	13.083	1.87	19.08	0.75
1.167	0.58	7.167	2.35	13.167	1.87	19.17	0.75
1.250	0.60	7.250	2.59	13.250	1.79	19.25	0.74
1.333	0.60	7.333	2.59	13.333	1.79	19.33	0.74
1.417	0.61	7.417	2.87	13.417	1.72	19.42	0.73
1.500	0.61	7.500	2.87	13.500	1.72	19.50	0.73
1.583	0.62	7.583	3.23	13.583	1.65	19.58	0.72
1.667	0.62	7.667	3.23	13.667	1.65	19.67	0.72
1.750	0.63	7.750	3.69	13.750	1.59	19.75	0.71
1.833	0.63	7.833	3.69	13.833	1.59	19.83	0.71
1.917	0.65	7.917	4.30	13.917	1.54	19.92	0.69
2.000	0.65	8.000	4.30	14.000	1.54	20.00	0.69
2.083	0.66	8.083	5.16	14.083	1.48	20.08	0.68
2.167	0.66	8.167	5.16	14.167	1.48	20.17	0.68
2.250	0.68	8.250	6.42	14.250	1.44	20.25	0.68
2.333	0.68	8.333	6.42	14.333	1.44	20.33	0.68
2.417	0.70	8.417	8.44	14.417	1.39	20.42	0.67
2.500	0.70	8.500	8.44	14.500	1.39	20.50	0.67
2.583	0.71	8.583	12.12	14.583	1.35	20.58	0.66
2.667	0.71	8.667	12.12	14.667	1.35	20.67	0.66
2.750	0.73	8.750	20.49	14.750	1.31	20.75	0.65
2.833	0.73	8.833	20.49	14.833	1.31	20.83	0.65

2.917	0.75	8.917	51.45	14.917	1.27	20.92	0.64
3.000	0.75	9.000	51.45	15.000	1.27	21.00	0.64
3.083	0.77	9.083	157.29	15.083	1.24	21.08	0.63
3.167	0.77	9.167	157.29	15.167	1.24	21.17	0.63
3.250	0.79	9.250	62.45	15.250	1.20	21.25	0.62
3.333	0.79	9.333	62.45	15.333	1.20	21.33	0.62
3.417	0.81	9.417	31.10	15.417	1.17	21.42	0.61
3.500	0.81	9.500	31.10	15.500	1.17	21.50	0.61
3.583	0.84	9.583	19.70	15.583	1.14	21.58	0.61
3.667	0.84	9.667	19.70	15.667	1.14	21.67	0.61
3.750	0.86	9.750	14.09	15.750	1.11	21.75	0.60
3.833	0.86	9.833	14.09	15.833	1.11	21.83	0.60
3.917	0.89	9.917	10.83	15.917	1.09	21.92	0.59
4.000	0.89	10.000	10.83	16.000	1.09	22.00	0.59
4.083	0.92	10.083	8.74	16.083	1.06	22.08	0.58
4.167	0.92	10.167	8.74	16.167	1.06	22.17	0.58
4.250	0.95	10.250	7.30	16.250	1.04	22.25	0.58
4.333	0.95	10.333	7.30	16.333	1.04	22.33	0.58
4.417	0.98	10.417	6.25	16.417	1.01	22.42	0.57
4.500	0.98	10.500	6.25	16.500	1.01	22.50	0.57
4.583	1.02	10.583	5.46	16.583	0.99	22.58	0.56
4.667	1.02	10.667	5.46	16.667	0.99	22.67	0.56
4.750	1.06	10.750	4.84	16.750	0.97	22.75	0.56
4.833	1.06	10.833	4.84	16.833	0.97	22.83	0.56
4.917	1.10	10.917	4.35	16.917	0.95	22.92	0.55
5.000	1.10	11.000	4.35	17.000	0.95	23.00	0.55
5.083	1.15	11.083	3.94	17.083	0.93	23.08	0.55
5.167	1.15	11.167	3.94	17.167	0.93	23.17	0.55
5.250	1.20	11.250	3.61	17.250	0.91	23.25	0.54
5.333	1.20	11.333	3.61	17.333	0.91	23.33	0.54
5.417	1.25	11.417	3.32	17.417	0.89	23.42	0.53
5.500	1.25	11.500	3.32	17.500	0.89	23.50	0.53
5.583	1.31	11.583	3.08	17.583	0.88	23.58	0.53
5.667	1.31	11.667	3.08	17.667	0.88	23.67	0.53
5.750	1.38	11.750	2.87	17.750	0.86	23.75	0.52
5.833	1.38	11.833	2.87	17.833	0.86	23.83	0.52
5.917	1.45	11.917	2.69	17.917	0.85	23.92	0.52
6.000	1.45	12.000	2.69	18.000	0.85	24.00	0.52

Unit Hyd Qpeak (cms)= 0.348

PEAK FLOW (cms)= 0.341 (i)
TIME TO PEAK (hrs)= 9.667
RUNOFF VOLUME (mm)= 48.830
TOTAL RAINFALL (mm)= 98.197
RUNOFF COEFFICIENT = 0.497

(i) PEAK FLOW DOES NOT INCLUDE BASEFLOW IF ANY.

CALIB NASHYD (2800) ID= 1 DT= 5.0 min

Area (ha)= 16.90 Curve Number (CN)= 75.0
Ia (mm)= 5.00 # of Linear Res.(N)= 3.00
U.H. Tp(hrs)= 0.73

NOTE: RAINFALL WAS TRANSFORMED TO 5.0 MIN. TIME STEP.

---- TRANSFORMED HYETOGRAPH ----

TIME hrs	RAIN mm/hr	TIME hrs	RAIN mm/hr	TIME hrs	RAIN mm/hr	TIME hrs	RAIN mm/hr
0.083	0.52	6.083	1.53	12.083	2.53	18.08	0.83
0.167	0.52	6.167	1.53	12.167	2.53	18.17	0.83

0.250	0.53	6.250	1.63	12.250	2.39	18.25	0.82
0.333	0.53	6.333	1.63	12.333	2.39	18.33	0.82
0.417	0.54	6.417	1.73	12.417	2.26	18.42	0.80
0.500	0.54	6.500	1.73	12.500	2.26	18.50	0.80
0.583	0.55	6.583	1.85	12.583	2.15	18.58	0.79
0.667	0.55	6.667	1.85	12.667	2.15	18.67	0.79
0.750	0.56	6.750	2.00	12.750	2.04	18.75	0.77
0.833	0.56	6.833	2.00	12.833	2.04	18.83	0.77
0.917	0.57	6.917	2.16	12.917	1.95	18.92	0.76
1.000	0.57	7.000	2.16	13.000	1.95	19.00	0.76
1.083	0.58	7.083	2.35	13.083	1.87	19.08	0.75
1.167	0.58	7.167	2.35	13.167	1.87	19.17	0.75
1.250	0.60	7.250	2.59	13.250	1.79	19.25	0.74
1.333	0.60	7.333	2.59	13.333	1.79	19.33	0.74
1.417	0.61	7.417	2.87	13.417	1.72	19.42	0.73
1.500	0.61	7.500	2.87	13.500	1.72	19.50	0.73
1.583	0.62	7.583	3.23	13.583	1.65	19.58	0.72
1.667	0.62	7.667	3.23	13.667	1.65	19.67	0.72
1.750	0.63	7.750	3.69	13.750	1.59	19.75	0.71
1.833	0.63	7.833	3.69	13.833	1.59	19.83	0.71
1.917	0.65	7.917	4.30	13.917	1.54	19.92	0.69
2.000	0.65	8.000	4.30	14.000	1.54	20.00	0.69
2.083	0.66	8.083	5.16	14.083	1.48	20.08	0.68
2.167	0.66	8.167	5.16	14.167	1.48	20.17	0.68
2.250	0.68	8.250	6.42	14.250	1.44	20.25	0.68
2.333	0.68	8.333	6.42	14.333	1.44	20.33	0.68
2.417	0.70	8.417	8.44	14.417	1.39	20.42	0.67
2.500	0.70	8.500	8.44	14.500	1.39	20.50	0.67
2.583	0.71	8.583	12.12	14.583	1.35	20.58	0.66
2.667	0.71	8.667	12.12	14.667	1.35	20.67	0.66
2.750	0.73	8.750	20.49	14.750	1.31	20.75	0.65
2.833	0.73	8.833	20.49	14.833	1.31	20.83	0.65
2.917	0.75	8.917	51.45	14.917	1.27	20.92	0.64
3.000	0.75	9.000	51.45	15.000	1.27	21.00	0.64
3.083	0.77	9.083	157.29	15.083	1.24	21.08	0.63
3.167	0.77	9.167	157.29	15.167	1.24	21.17	0.63
3.250	0.79	9.250	62.45	15.250	1.20	21.25	0.62
3.333	0.79	9.333	62.45	15.333	1.20	21.33	0.62
3.417	0.81	9.417	31.10	15.417	1.17	21.42	0.61
3.500	0.81	9.500	31.10	15.500	1.17	21.50	0.61
3.583	0.84	9.583	19.70	15.583	1.14	21.58	0.61
3.667	0.84	9.667	19.70	15.667	1.14	21.67	0.61
3.750	0.86	9.750	14.09	15.750	1.11	21.75	0.60
3.833	0.86	9.833	14.09	15.833	1.11	21.83	0.60
3.917	0.89	9.917	10.83	15.917	1.09	21.92	0.59
4.000	0.89	10.000	10.83	16.000	1.09	22.00	0.59
4.083	0.92	10.083	8.74	16.083	1.06	22.08	0.58
4.167	0.92	10.167	8.74	16.167	1.06	22.17	0.58
4.250	0.95	10.250	7.30	16.250	1.04	22.25	0.58
4.333	0.95	10.333	7.30	16.333	1.04	22.33	0.58
4.417	0.98	10.417	6.25	16.417	1.01	22.42	0.57
4.500	0.98	10.500	6.25	16.500	1.01	22.50	0.57
4.583	1.02	10.583	5.46	16.583	0.99	22.58	0.56
4.667	1.02	10.667	5.46	16.667	0.99	22.67	0.56
4.750	1.06	10.750	4.84	16.750	0.97	22.75	0.56
4.833	1.06	10.833	4.84	16.833	0.97	22.83	0.56
4.917	1.10	10.917	4.35	16.917	0.95	22.92	0.55
5.000	1.10	11.000	4.35	17.000	0.95	23.00	0.55
5.083	1.15	11.083	3.94	17.083	0.93	23.08	0.55
5.167	1.15	11.167	3.94	17.167	0.93	23.17	0.55
5.250	1.20	11.250	3.61	17.250	0.91	23.25	0.54
5.333	1.20	11.333	3.61	17.333	0.91	23.33	0.54
5.417	1.25	11.417	3.32	17.417	0.89	23.42	0.53
5.500	1.25	11.500	3.32	17.500	0.89	23.50	0.53

5.583	1.31	11.583	3.08	17.583	0.88	23.58	0.53
5.667	1.31	11.667	3.08	17.667	0.88	23.67	0.53
5.750	1.38	11.750	2.87	17.750	0.86	23.75	0.52
5.833	1.38	11.833	2.87	17.833	0.86	23.83	0.52
5.917	1.45	11.917	2.69	17.917	0.85	23.92	0.52
6.000	1.45	12.000	2.69	18.000	0.85	24.00	0.52

Unit Hyd Qpeak (cms)= 0.884

PEAK FLOW (cms)= 0.971 (i)
TIME TO PEAK (hrs)= 10.000
RUNOFF VOLUME (mm)= 48.832
TOTAL RAINFALL (mm)= 98.197
RUNOFF COEFFICIENT = 0.497

(i) PEAK FLOW DOES NOT INCLUDE BASEFLOW IF ANY.

CALIB			
NASHYD (2900)	Area (ha)= 17.23	Curve Number (CN)= 75.0	
ID= 1 DT= 5.0 min	Ia (mm)= 5.00	# of Linear Res.(N)= 3.00	
	U.H. Tp(hrs)= 0.90		

NOTE: RAINFALL WAS TRANSFORMED TO 5.0 MIN. TIME STEP.

---- TRANSFORMED HYETOGRAPH ----

TIME hrs	RAIN mm/hr	TIME hrs	RAIN mm/hr	TIME hrs	RAIN mm/hr	TIME hrs	RAIN mm/hr
0.083	0.52	6.083	1.53	12.083	2.53	18.08	0.83
0.167	0.52	6.167	1.53	12.167	2.53	18.17	0.83
0.250	0.53	6.250	1.63	12.250	2.39	18.25	0.82
0.333	0.53	6.333	1.63	12.333	2.39	18.33	0.82
0.417	0.54	6.417	1.73	12.417	2.26	18.42	0.80
0.500	0.54	6.500	1.73	12.500	2.26	18.50	0.80
0.583	0.55	6.583	1.85	12.583	2.15	18.58	0.79
0.667	0.55	6.667	1.85	12.667	2.15	18.67	0.79
0.750	0.56	6.750	2.00	12.750	2.04	18.75	0.77
0.833	0.56	6.833	2.00	12.833	2.04	18.83	0.77
0.917	0.57	6.917	2.16	12.917	1.95	18.92	0.76
1.000	0.57	7.000	2.16	13.000	1.95	19.00	0.76
1.083	0.58	7.083	2.35	13.083	1.87	19.08	0.75
1.167	0.58	7.167	2.35	13.167	1.87	19.17	0.75
1.250	0.60	7.250	2.59	13.250	1.79	19.25	0.74
1.333	0.60	7.333	2.59	13.333	1.79	19.33	0.74
1.417	0.61	7.417	2.87	13.417	1.72	19.42	0.73
1.500	0.61	7.500	2.87	13.500	1.72	19.50	0.73
1.583	0.62	7.583	3.23	13.583	1.65	19.58	0.72
1.667	0.62	7.667	3.23	13.667	1.65	19.67	0.72
1.750	0.63	7.750	3.69	13.750	1.59	19.75	0.71
1.833	0.63	7.833	3.69	13.833	1.59	19.83	0.71
1.917	0.65	7.917	4.30	13.917	1.54	19.92	0.69
2.000	0.65	8.000	4.30	14.000	1.54	20.00	0.69
2.083	0.66	8.083	5.16	14.083	1.48	20.08	0.68
2.167	0.66	8.167	5.16	14.167	1.48	20.17	0.68
2.250	0.68	8.250	6.42	14.250	1.44	20.25	0.68
2.333	0.68	8.333	6.42	14.333	1.44	20.33	0.68
2.417	0.70	8.417	8.44	14.417	1.39	20.42	0.67
2.500	0.70	8.500	8.44	14.500	1.39	20.50	0.67
2.583	0.71	8.583	12.12	14.583	1.35	20.58	0.66
2.667	0.71	8.667	12.12	14.667	1.35	20.67	0.66
2.750	0.73	8.750	20.49	14.750	1.31	20.75	0.65
2.833	0.73	8.833	20.49	14.833	1.31	20.83	0.65

2.917	0.75	8.917	51.45	14.917	1.27	20.92	0.64
3.000	0.75	9.000	51.45	15.000	1.27	21.00	0.64
3.083	0.77	9.083	157.29	15.083	1.24	21.08	0.63
3.167	0.77	9.167	157.29	15.167	1.24	21.17	0.63
3.250	0.79	9.250	62.45	15.250	1.20	21.25	0.62
3.333	0.79	9.333	62.45	15.333	1.20	21.33	0.62
3.417	0.81	9.417	31.10	15.417	1.17	21.42	0.61
3.500	0.81	9.500	31.10	15.500	1.17	21.50	0.61
3.583	0.84	9.583	19.70	15.583	1.14	21.58	0.61
3.667	0.84	9.667	19.70	15.667	1.14	21.67	0.61
3.750	0.86	9.750	14.09	15.750	1.11	21.75	0.60
3.833	0.86	9.833	14.09	15.833	1.11	21.83	0.60
3.917	0.89	9.917	10.83	15.917	1.09	21.92	0.59
4.000	0.89	10.000	10.83	16.000	1.09	22.00	0.59
4.083	0.92	10.083	8.74	16.083	1.06	22.08	0.58
4.167	0.92	10.167	8.74	16.167	1.06	22.17	0.58
4.250	0.95	10.250	7.30	16.250	1.04	22.25	0.58
4.333	0.95	10.333	7.30	16.333	1.04	22.33	0.58
4.417	0.98	10.417	6.25	16.417	1.01	22.42	0.57
4.500	0.98	10.500	6.25	16.500	1.01	22.50	0.57
4.583	1.02	10.583	5.46	16.583	0.99	22.58	0.56
4.667	1.02	10.667	5.46	16.667	0.99	22.67	0.56
4.750	1.06	10.750	4.84	16.750	0.97	22.75	0.56
4.833	1.06	10.833	4.84	16.833	0.97	22.83	0.56
4.917	1.10	10.917	4.35	16.917	0.95	22.92	0.55
5.000	1.10	11.000	4.35	17.000	0.95	23.00	0.55
5.083	1.15	11.083	3.94	17.083	0.93	23.08	0.55
5.167	1.15	11.167	3.94	17.167	0.93	23.17	0.55
5.250	1.20	11.250	3.61	17.250	0.91	23.25	0.54
5.333	1.20	11.333	3.61	17.333	0.91	23.33	0.54
5.417	1.25	11.417	3.32	17.417	0.89	23.42	0.53
5.500	1.25	11.500	3.32	17.500	0.89	23.50	0.53
5.583	1.31	11.583	3.08	17.583	0.88	23.58	0.53
5.667	1.31	11.667	3.08	17.667	0.88	23.67	0.53
5.750	1.38	11.750	2.87	17.750	0.86	23.75	0.52
5.833	1.38	11.833	2.87	17.833	0.86	23.83	0.52
5.917	1.45	11.917	2.69	17.917	0.85	23.92	0.52
6.000	1.45	12.000	2.69	18.000	0.85	24.00	0.52

Unit Hyd Qpeak (cms)= 0.731

PEAK FLOW (cms)= 0.848 (i)
TIME TO PEAK (hrs)= 10.167
RUNOFF VOLUME (mm)= 48.833
TOTAL RAINFALL (mm)= 98.197
RUNOFF COEFFICIENT = 0.497

(i) PEAK FLOW DOES NOT INCLUDE BASEFLOW IF ANY.

ROUTE CHN(28001)
IN= 2---> OUT= 1

Routing time step (min)'= 5.00

<------ DATA FOR SECTION (1.1) ------>

Distance	Elevation	Manning	
0.00	274.48	0.0800	
41.89	272.38	0.0800 /0.0350	Main Channel
46.88	272.13	0.0350	Main Channel
49.38	272.11	0.0350	Main Channel
54.86	272.30	0.0350 /0.0800	Main Channel
98.25	276.73	0.0800	

<---------- TRAVEL TIME TABLE ---------->

DEPTH (m)	ELEV (m)	VOLUME (cu.m.)	FLOW RATE (cms)	VELOCITY (m/s)	TRAV.TIME (min)
0.10	272.20	.336E+03	0.2	0.51	27.44
0.19	272.30	.106E+04	1.0	0.78	18.08
0.32	272.43	.249E+04	3.5	1.19	11.77
0.45	272.56	.434E+04	7.8	1.50	9.33
0.57	272.68	.660E+04	13.5	1.72	8.17
0.70	272.81	.927E+04	20.7	1.88	7.48
0.83	272.94	.124E+05	29.4	2.01	7.00
0.96	273.07	.158E+05	39.8	2.11	6.64
1.09	273.20	.198E+05	51.7	2.21	6.36
1.22	273.33	.241E+05	65.4	2.29	6.13
1.34	273.45	.288E+05	80.9	2.36	5.94
1.47	273.58	.339E+05	98.1	2.43	5.76
1.60	273.71	.395E+05	117.3	2.50	5.61
1.73	273.84	.455E+05	138.3	2.56	5.48
1.86	273.97	.518E+05	161.4	2.62	5.35
1.99	274.10	.586E+05	186.5	2.68	5.24
2.11	274.22	.658E+05	213.7	2.73	5.13
2.24	274.35	.734E+05	243.0	2.79	5.04
2.37	274.48	.815E+05	274.6	2.84	4.94

		<---- hydrograph ---->			<-pipe / channel->	
	AREA (ha)	QPEAK (cms)	TPEAK (hrs)	R.V. (mm)	MAX DEPTH (m)	MAX VEL (m/s)
INFLOW : ID= 2 (2900)	17.23	0.85	10.17	48.83	0.17	0.71
OUTFLOW: ID= 1 (28001)	17.23	0.79	10.42	48.83	0.17	0.69

ADD HYD (28000) | 1 + 2 = 3	AREA (ha)	QPEAK (cms)	TPEAK (hrs)	R.V. (mm)
ID1= 1 (2800):	16.90	0.971	10.00	48.83
+ ID2= 2 (28001):	17.23	0.791	10.42	48.83
ID = 3 (28000):	34.13	1.663	10.25	48.83

NOTE: PEAK FLOWS DO NOT INCLUDE BASEFLOWS IF ANY.

ADD HYD (0023) | 1 + 2 = 3	AREA (ha)	QPEAK (cms)	TPEAK (hrs)	R.V. (mm)
ID1= 1 (2701):	4.55	0.341	9.67	48.83
+ ID2= 2 (28000):	34.13	1.663	10.25	48.83
ID = 3 (0023):	38.68	1.907	10.17	48.83

NOTE: PEAK FLOWS DO NOT INCLUDE BASEFLOWS IF ANY.

ROUTE CHN(27001) | IN= 2---> OUT= 1	Routing time step (min)'= 5.00

<------ DATA FOR SECTION (1.1) ------>

Distance	Elevation	Manning	
0.00	262.89	0.0800	
21.45	262.29	0.0800 /0.0350	Main Channel
23.45	261.94	0.0350	Main Channel

27.44	261.99	0.0350	Main Channel
29.93	262.39	0.0350 /0.0800	Main Channel
71.84	264.85	0.0800	

<-------------------- TRAVEL TIME TABLE ---------------------->

DEPTH (m)	ELEV (m)	VOLUME (cu.m.)	FLOW RATE (cms)	VELOCITY (m/s)	TRAV.TIME (min)
0.05	261.99	.431E+02	0.0	0.23	29.33
0.10	262.04	.135E+03	0.2	0.45	14.94
0.15	262.09	.240E+03	0.4	0.61	11.04
0.20	262.14	.356E+03	0.7	0.74	9.09
0.25	262.19	.484E+03	1.0	0.85	7.89
0.30	262.24	.625E+03	1.5	0.95	7.05
0.35	262.29	.777E+03	2.0	1.05	6.43
0.40	262.34	.957E+03	2.7	1.14	5.92
0.45	262.39	.118E+04	3.5	1.19	5.65
0.50	262.44	.145E+04	4.5	1.24	5.40
0.55	262.49	.177E+04	5.6	1.27	5.27
0.60	262.54	.215E+04	6.9	1.29	5.20
0.65	262.59	.258E+04	8.3	1.30	5.17
0.70	262.64	.306E+04	9.9	1.31	5.14
0.75	262.69	.359E+04	11.7	1.31	5.12
0.80	262.74	.418E+04	13.7	1.32	5.10
0.85	262.79	.483E+04	15.8	1.32	5.08
0.90	262.84	.552E+04	18.2	1.33	5.06
0.95	262.89	.627E+04	20.7	1.33	5.04

	AREA (ha)	<---- hydrograph ----> QPEAK (cms)	TPEAK (hrs)	R.V. (mm)	<-pipe / channel-> MAX DEPTH (m)	MAX VEL (m/s)
INFLOW : ID= 2 (0023)	38.68	1.91	10.17	48.83	0.34	1.03
OUTFLOW: ID= 1 (27001)	38.68	1.90	10.25	48.83	0.34	1.02

ADD HYD (27000) | 1 + 2 = 3	AREA (ha)	QPEAK (cms)	TPEAK (hrs)	R.V. (mm)
ID1= 1 (2700):	6.38	0.717	9.42	51.35
+ ID2= 2 (27001):	38.68	1.896	10.25	48.83
ID = 3 (27000):	45.06	2.130	10.08	49.19

NOTE: PEAK FLOWS DO NOT INCLUDE BASEFLOWS IF ANY.

CALIB NASHYD (2601) | ID= 1 DT= 5.0 min				
	Area (ha)=	20.70	Curve Number (CN)=	76.0
	Ia (mm)=	5.00	# of Linear Res.(N)=	3.00
	U.H. Tp(hrs)=	0.44		

NOTE: RAINFALL WAS TRANSFORMED TO 5.0 MIN. TIME STEP.

---- TRANSFORMED HYETOGRAPH ----

TIME hrs	RAIN mm/hr	TIME hrs	RAIN mm/hr	TIME hrs	RAIN mm/hr	TIME hrs	RAIN mm/hr
0.083	0.52	6.083	1.53	12.083	2.53	18.08	0.83
0.167	0.52	6.167	1.53	12.167	2.53	18.17	0.83
0.250	0.53	6.250	1.63	12.250	2.39	18.25	0.82
0.333	0.53	6.333	1.63	12.333	2.39	18.33	0.82

0.417	0.54	6.417	1.73	12.417	2.26	18.42	0.80
0.500	0.54	6.500	1.73	12.500	2.26	18.50	0.80
0.583	0.55	6.583	1.85	12.583	2.15	18.58	0.79
0.667	0.55	6.667	1.85	12.667	2.15	18.67	0.79
0.750	0.56	6.750	2.00	12.750	2.04	18.75	0.77
0.833	0.56	6.833	2.00	12.833	2.04	18.83	0.77
0.917	0.57	6.917	2.16	12.917	1.95	18.92	0.76
1.000	0.57	7.000	2.16	13.000	1.95	19.00	0.76
1.083	0.58	7.083	2.35	13.083	1.87	19.08	0.75
1.167	0.58	7.167	2.35	13.167	1.87	19.17	0.75
1.250	0.60	7.250	2.59	13.250	1.79	19.25	0.74
1.333	0.60	7.333	2.59	13.333	1.79	19.33	0.74
1.417	0.61	7.417	2.87	13.417	1.72	19.42	0.73
1.500	0.61	7.500	2.87	13.500	1.72	19.50	0.73
1.583	0.62	7.583	3.23	13.583	1.65	19.58	0.72
1.667	0.62	7.667	3.23	13.667	1.65	19.67	0.72
1.750	0.63	7.750	3.69	13.750	1.59	19.75	0.71
1.833	0.63	7.833	3.69	13.833	1.59	19.83	0.71
1.917	0.65	7.917	4.30	13.917	1.54	19.92	0.69
2.000	0.65	8.000	4.30	14.000	1.54	20.00	0.69
2.083	0.66	8.083	5.16	14.083	1.48	20.08	0.68
2.167	0.66	8.167	5.16	14.167	1.48	20.17	0.68
2.250	0.68	8.250	6.42	14.250	1.44	20.25	0.68
2.333	0.68	8.333	6.42	14.333	1.44	20.33	0.68
2.417	0.70	8.417	8.44	14.417	1.39	20.42	0.67
2.500	0.70	8.500	8.44	14.500	1.39	20.50	0.67
2.583	0.71	8.583	12.12	14.583	1.35	20.58	0.66
2.667	0.71	8.667	12.12	14.667	1.35	20.67	0.66
2.750	0.73	8.750	20.49	14.750	1.31	20.75	0.65
2.833	0.73	8.833	20.49	14.833	1.31	20.83	0.65
2.917	0.75	8.917	51.45	14.917	1.27	20.92	0.64
3.000	0.75	9.000	51.45	15.000	1.27	21.00	0.64
3.083	0.77	9.083	157.29	15.083	1.24	21.08	0.63
3.167	0.77	9.167	157.29	15.167	1.24	21.17	0.63
3.250	0.79	9.250	62.45	15.250	1.20	21.25	0.62
3.333	0.79	9.333	62.45	15.333	1.20	21.33	0.62
3.417	0.81	9.417	31.10	15.417	1.17	21.42	0.61
3.500	0.81	9.500	31.10	15.500	1.17	21.50	0.61
3.583	0.84	9.583	19.70	15.583	1.14	21.58	0.61
3.667	0.84	9.667	19.70	15.667	1.14	21.67	0.61
3.750	0.86	9.750	14.09	15.750	1.11	21.75	0.60
3.833	0.86	9.833	14.09	15.833	1.11	21.83	0.60
3.917	0.89	9.917	10.83	15.917	1.09	21.92	0.59
4.000	0.89	10.000	10.83	16.000	1.09	22.00	0.59
4.083	0.92	10.083	8.74	16.083	1.06	22.08	0.58
4.167	0.92	10.167	8.74	16.167	1.06	22.17	0.58
4.250	0.95	10.250	7.30	16.250	1.04	22.25	0.58
4.333	0.95	10.333	7.30	16.333	1.04	22.33	0.58
4.417	0.98	10.417	6.25	16.417	1.01	22.42	0.57
4.500	0.98	10.500	6.25	16.500	1.01	22.50	0.57
4.583	1.02	10.583	5.46	16.583	0.99	22.58	0.56
4.667	1.02	10.667	5.46	16.667	0.99	22.67	0.56
4.750	1.06	10.750	4.84	16.750	0.97	22.75	0.56
4.833	1.06	10.833	4.84	16.833	0.97	22.83	0.56
4.917	1.10	10.917	4.35	16.917	0.95	22.92	0.55
5.000	1.10	11.000	4.35	17.000	0.95	23.00	0.55
5.083	1.15	11.083	3.94	17.083	0.93	23.08	0.55
5.167	1.15	11.167	3.94	17.167	0.93	23.17	0.55
5.250	1.20	11.250	3.61	17.250	0.91	23.25	0.54
5.333	1.20	11.333	3.61	17.333	0.91	23.33	0.54
5.417	1.25	11.417	3.32	17.417	0.89	23.42	0.53
5.500	1.25	11.500	3.32	17.500	0.89	23.50	0.53
5.583	1.31	11.583	3.08	17.583	0.88	23.58	0.53
5.667	1.31	11.667	3.08	17.667	0.88	23.67	0.53

5.750	1.38	11.750	2.87	17.750	0.86	23.75	0.52
5.833	1.38	11.833	2.87	17.833	0.86	23.83	0.52
5.917	1.45	11.917	2.69	17.917	0.85	23.92	0.52
6.000	1.45	12.000	2.69	18.000	0.85	24.00	0.52

Unit Hyd Qpeak (cms)= 1.797

PEAK FLOW (cms)= 1.737 (i)
TIME TO PEAK (hrs)= 9.583
RUNOFF VOLUME (mm)= 50.084
TOTAL RAINFALL (mm)= 98.197
RUNOFF COEFFICIENT = 0.510

(i) PEAK FLOW DOES NOT INCLUDE BASEFLOW IF ANY.

ADD HYD (0022)		AREA	QPEAK	TPEAK	R.V.
1 + 2 = 3		(ha)	(cms)	(hrs)	(mm)
	ID1= 1 (2601):	20.70	1.737	9.58	50.08
	+ ID2= 2 (27000):	45.06	2.130	10.08	49.19
	ID = 3 (0022):	65.76	3.662	9.75	49.47

NOTE: PEAK FLOWS DO NOT INCLUDE BASEFLOWS IF ANY.

ROUTE CHN(26001)	
IN= 2---> OUT= 1	Routing time step (min)'= 5.00

<------ DATA FOR SECTION (1.1) ------>

Distance	Elevation	Manning	
5.49	259.50	0.0800	
11.98	259.28	0.0800 /0.0350	Main Channel
14.97	259.08	0.0350	Main Channel
17.96	259.05	0.0350	Main Channel
22.95	259.62	0.0350 /0.0800	Main Channel
42.42	259.98	0.0800	

<---------- TRAVEL TIME TABLE ---------->

DEPTH (m)	ELEV (m)	VOLUME (cu.m.)	FLOW RATE (cms)	VELOCITY (m/s)	TRAV.TIME (min)
0.02	259.07	.133E+02	0.0	0.09	87.17
0.05	259.10	.481E+02	0.0	0.16	47.50
0.07	259.12	.896E+02	0.0	0.22	34.43
0.09	259.14	.137E+03	0.1	0.27	28.16
0.11	259.16	.190E+03	0.1	0.32	24.35
0.14	259.19	.249E+03	0.2	0.36	21.72
0.16	259.21	.314E+03	0.3	0.39	19.76
0.18	259.23	.384E+03	0.4	0.42	18.24
0.21	259.26	.461E+03	0.5	0.45	17.01
0.23	259.28	.543E+03	0.6	0.48	15.98
0.25	259.30	.633E+03	0.7	0.52	14.81
0.28	259.33	.738E+03	0.9	0.55	13.92
0.30	259.35	.855E+03	1.1	0.58	13.25
0.33	259.38	.981E+03	1.3	0.61	12.73
0.35	259.40	.112E+04	1.5	0.63	12.32
0.38	259.43	.127E+04	1.8	0.64	11.97
0.40	259.45	.143E+04	2.0	0.66	11.68
0.42	259.47	.159E+04	2.3	0.68	11.43
0.45	259.50	.177E+04	2.6	0.69	11.21

**** WARNING: TRAVEL TIME TABLE EXCEEDED

	AREA (ha)	QPEAK (cms)	TPEAK (hrs)	R.V. (mm)	MAX DEPTH (m)	MAX VEL (m/s)
	<---- hydrograph ---->				<-pipe / channel->	
INFLOW : ID= 2 (0022)	65.76	3.66	9.75	49.47	0.44	0.69
OUTFLOW: ID= 1 (26001)	65.76	3.45	10.00	49.46	0.45	0.69

ADD HYD (26000)		AREA (ha)	QPEAK (cms)	TPEAK (hrs)	R.V. (mm)
1 + 2 = 3	ID1= 1 (2600):	2.14	0.246	9.42	51.35
	+ ID2= 2 (26001):	65.76	3.446	10.00	49.46
	ID = 3 (26000):	67.90	3.545	10.00	49.52

NOTE: PEAK FLOWS DO NOT INCLUDE BASEFLOWS IF ANY.

CALIB STANDHYD (2501) ID= 1 DT= 5.0 min	Area (ha)= 4.86	Total Imp(%)= 53.00	Dir. Conn.(%)= 18.00

		IMPERVIOUS	PERVIOUS (i)
Surface Area	(ha)=	2.58	2.28
Dep. Storage	(mm)=	1.00	1.50
Average Slope	(%)=	1.00	2.00
Length	(m)=	180.00	40.00
Mannings n	=	0.013	0.250

NOTE: RAINFALL WAS TRANSFORMED TO 5.0 MIN. TIME STEP.

---- TRANSFORMED HYETOGRAPH ----

TIME hrs	RAIN mm/hr	TIME hrs	RAIN mm/hr	TIME hrs	RAIN mm/hr	TIME hrs	RAIN mm/hr
0.083	0.52	6.083	1.53	12.083	2.53	18.08	0.83
0.167	0.52	6.167	1.53	12.167	2.53	18.17	0.83
0.250	0.53	6.250	1.63	12.250	2.39	18.25	0.82
0.333	0.53	6.333	1.63	12.333	2.39	18.33	0.82
0.417	0.54	6.417	1.73	12.417	2.26	18.42	0.80
0.500	0.54	6.500	1.73	12.500	2.26	18.50	0.80
0.583	0.55	6.583	1.85	12.583	2.15	18.58	0.79
0.667	0.55	6.667	1.85	12.667	2.15	18.67	0.79
0.750	0.56	6.750	2.00	12.750	2.04	18.75	0.77
0.833	0.56	6.833	2.00	12.833	2.04	18.83	0.77
0.917	0.57	6.917	2.16	12.917	1.95	18.92	0.76
1.000	0.57	7.000	2.16	13.000	1.95	19.00	0.76
1.083	0.58	7.083	2.35	13.083	1.87	19.08	0.75
1.167	0.58	7.167	2.35	13.167	1.87	19.17	0.75
1.250	0.60	7.250	2.59	13.250	1.79	19.25	0.74
1.333	0.60	7.333	2.59	13.333	1.79	19.33	0.74
1.417	0.61	7.417	2.87	13.417	1.72	19.42	0.73
1.500	0.61	7.500	2.87	13.500	1.72	19.50	0.73
1.583	0.62	7.583	3.23	13.583	1.65	19.58	0.72
1.667	0.62	7.667	3.23	13.667	1.65	19.67	0.72
1.750	0.63	7.750	3.69	13.750	1.59	19.75	0.71
1.833	0.63	7.833	3.69	13.833	1.59	19.83	0.71
1.917	0.65	7.917	4.30	13.917	1.54	19.92	0.69
2.000	0.65	8.000	4.30	14.000	1.54	20.00	0.69

2.083	0.66	8.083	5.16	14.083	1.48	20.08	0.68
2.167	0.66	8.167	5.16	14.167	1.48	20.17	0.68
2.250	0.68	8.250	6.42	14.250	1.44	20.25	0.68
2.333	0.68	8.333	6.42	14.333	1.44	20.33	0.68
2.417	0.70	8.417	8.44	14.417	1.39	20.42	0.67
2.500	0.70	8.500	8.44	14.500	1.39	20.50	0.67
2.583	0.71	8.583	12.12	14.583	1.35	20.58	0.66
2.667	0.71	8.667	12.12	14.667	1.35	20.67	0.66
2.750	0.73	8.750	20.49	14.750	1.31	20.75	0.65
2.833	0.73	8.833	20.49	14.833	1.31	20.83	0.65
2.917	0.75	8.917	51.45	14.917	1.27	20.92	0.64
3.000	0.75	9.000	51.45	15.000	1.27	21.00	0.64
3.083	0.77	9.083	157.29	15.083	1.24	21.08	0.63
3.167	0.77	9.167	157.29	15.167	1.24	21.17	0.63
3.250	0.79	9.250	62.45	15.250	1.20	21.25	0.62
3.333	0.79	9.333	62.45	15.333	1.20	21.33	0.62
3.417	0.81	9.417	31.10	15.417	1.17	21.42	0.61
3.500	0.81	9.500	31.10	15.500	1.17	21.50	0.61
3.583	0.84	9.583	19.70	15.583	1.14	21.58	0.61
3.667	0.84	9.667	19.70	15.667	1.14	21.67	0.61
3.750	0.86	9.750	14.09	15.750	1.11	21.75	0.60
3.833	0.86	9.833	14.09	15.833	1.11	21.83	0.60
3.917	0.89	9.917	10.83	15.917	1.09	21.92	0.59
4.000	0.89	10.000	10.83	16.000	1.09	22.00	0.59
4.083	0.92	10.083	8.74	16.083	1.06	22.08	0.58
4.167	0.92	10.167	8.74	16.167	1.06	22.17	0.58
4.250	0.95	10.250	7.30	16.250	1.04	22.25	0.58
4.333	0.95	10.333	7.30	16.333	1.04	22.33	0.58
4.417	0.98	10.417	6.25	16.417	1.01	22.42	0.57
4.500	0.98	10.500	6.25	16.500	1.01	22.50	0.57
4.583	1.02	10.583	5.46	16.583	0.99	22.58	0.56
4.667	1.02	10.667	5.46	16.667	0.99	22.67	0.56
4.750	1.06	10.750	4.84	16.750	0.97	22.75	0.56
4.833	1.06	10.833	4.84	16.833	0.97	22.83	0.56
4.917	1.10	10.917	4.35	16.917	0.95	22.92	0.55
5.000	1.10	11.000	4.35	17.000	0.95	23.00	0.55
5.083	1.15	11.083	3.94	17.083	0.93	23.08	0.55
5.167	1.15	11.167	3.94	17.167	0.93	23.17	0.55
5.250	1.20	11.250	3.61	17.250	0.91	23.25	0.54
5.333	1.20	11.333	3.61	17.333	0.91	23.33	0.54
5.417	1.25	11.417	3.32	17.417	0.89	23.42	0.53
5.500	1.25	11.500	3.32	17.500	0.89	23.50	0.53
5.583	1.31	11.583	3.08	17.583	0.88	23.58	0.53
5.667	1.31	11.667	3.08	17.667	0.88	23.67	0.53
5.750	1.38	11.750	2.87	17.750	0.86	23.75	0.52
5.833	1.38	11.833	2.87	17.833	0.86	23.83	0.52
5.917	1.45	11.917	2.69	17.917	0.85	23.92	0.52
6.000	1.45	12.000	2.69	18.000	0.85	24.00	0.52

Max.Eff.Inten.(mm/hr)=	157.29	221.87	
over (min)	5.00	10.00	
Storage Coeff. (min)=	3.03 (ii)	8.16 (ii)	
Unit Hyd. Tpeak (min)=	5.00	10.00	
Unit Hyd. peak (cms)=	0.27	0.13	
			TOTALS
PEAK FLOW (cms)=	0.37	1.01	1.282 (iii)
TIME TO PEAK (hrs)=	9.17	9.25	9.17
RUNOFF VOLUME (mm)=	97.20	74.51	78.59
TOTAL RAINFALL (mm)=	98.20	98.20	98.20
RUNOFF COEFFICIENT =	0.99	0.76	0.80

***** WARNING: STORAGE COEFF. IS SMALLER THAN TIME STEP!
***** WARNING:FOR AREAS WITH IMPERVIOUS RATIOS BELOW 20%
YOU SHOULD CONSIDER SPLITTING THE AREA.

```
      (i) CN PROCEDURE SELECTED FOR PERVIOUS LOSSES:
           CN*  =  83.0    Ia = Dep. Storage  (Above)
     (ii) TIME STEP (DT) SHOULD BE SMALLER OR EQUAL
          THAN THE STORAGE COEFFICIENT.
    (iii) PEAK FLOW DOES NOT INCLUDE BASEFLOW IF ANY.

--------------------------------------------------------------------------------

--------------------
| ADD HYD  (  0021)|
|   1 +  2 =  3    |          AREA    QPEAK    TPEAK     R.V.
--------------------          (ha)    (cms)    (hrs)     (mm)
       ID1= 1 (  2501):     4.86   1.282     9.17    78.59
     + ID2= 2 ( 26000):    67.90   3.545    10.00    49.52
       ==================================================
       ID = 3 (  0021):    72.76   3.730     9.92    51.46

    NOTE:  PEAK FLOWS DO NOT INCLUDE BASEFLOWS IF ANY.
--------------------------------------------------------------------------------
--------------------
| ROUTE CHN( 25001)|
| IN= 2---> OUT= 1 |     Routing time step (min)'=  5.00
--------------------
              <------ DATA FOR SECTION (   1.1) ------>
              Distance      Elevation       Manning
                 23.45        258.56        0.0800
                 26.94        257.29    0.0800 /0.0350  Main Channel
                 27.44        257.14        0.0350      Main Channel
                 27.94        257.11        0.0350      Main Channel
                 29.43        257.30    0.0350 /0.0800  Main Channel
                 50.38        257.36        0.0800

     <---------------------- TRAVEL TIME TABLE ---------------------->
      DEPTH    ELEV      VOLUME    FLOW RATE    VELOCITY   TRAV.TIME
       (m)      (m)     (cu.m.)      (cms)        (m/s)      (min)
      0.01   257.12    .497E+00       0.0          0.06      72.24
      0.03   257.14    .199E+01       0.0          0.09      45.51
      0.04   257.15    .435E+01       0.0          0.13      32.50
      0.05   257.16    .720E+01       0.0          0.16      25.87
      0.06   257.17    .105E+02       0.0          0.19      22.07
      0.08   257.19    .142E+02       0.0          0.21      19.52
      0.09   257.20    .185E+02       0.0          0.23      17.67
      0.10   257.21    .231E+02       0.0          0.25      16.23
      0.12   257.23    .282E+02       0.0          0.27      15.08
      0.13   257.24    .338E+02       0.0          0.29      14.13
      0.14   257.25    .398E+02       0.0          0.31      13.32
      0.15   257.26    .463E+02       0.1          0.32      12.63
      0.17   257.28    .532E+02       0.1          0.34      12.02
      0.18   257.29    .606E+02       0.1          0.36      11.49
      0.19   257.30    .698E+02       0.1          0.38      10.87
      0.21   257.32    .916E+02       0.1          0.35      11.60
      0.22   257.33    .130E+03       0.2          0.31      13.34
      0.24   257.35    .186E+03       0.2          0.27      15.30
      0.25   257.36    .259E+03       0.3          0.24      17.04

    **** WARNING:  TRAVEL TIME TABLE EXCEEDED
                                    <---- hydrograph ---->   <-pipe / channel->
                              AREA    QPEAK   TPEAK   R.V.   MAX DEPTH  MAX VEL
                              (ha)    (cms)   (hrs)   (mm)      (m)      (m/s)
  INFLOW : ID= 2 (  0021)   72.76     3.73    9.92  51.46      0.25      0.24
  OUTFLOW: ID= 1 ( 25001)   72.76     3.57   10.17  51.46      0.25      0.25
```

```
--------------------------------------------------------------------------------
--------------------
| CALIB              |
| STANDHYD (  2500)|   Area    (ha)=   4.12
|ID= 1 DT= 5.0 min |   Total Imp(%)=  45.00   Dir. Conn.(%)=  30.00
--------------------
                            IMPERVIOUS    PERVIOUS (i)
     Surface Area     (ha)=       1.85          2.27
     Dep. Storage     (mm)=       1.00          1.50
     Average Slope     (%)=       1.00          2.00
     Length            (m)=     165.73         40.00
     Mannings n           =      0.013         0.250

         NOTE:  RAINFALL WAS TRANSFORMED TO   5.0 MIN. TIME STEP.
```

---- TRANSFORMED HYETOGRAPH ----

TIME hrs	RAIN mm/hr	TIME hrs	RAIN mm/hr	TIME hrs	RAIN mm/hr	TIME hrs	RAIN mm/hr
0.083	0.52	6.083	1.53	12.083	2.53	18.08	0.83
0.167	0.52	6.167	1.53	12.167	2.53	18.17	0.83
0.250	0.53	6.250	1.63	12.250	2.39	18.25	0.82
0.333	0.53	6.333	1.63	12.333	2.39	18.33	0.82
0.417	0.54	6.417	1.73	12.417	2.26	18.42	0.80
0.500	0.54	6.500	1.73	12.500	2.26	18.50	0.80
0.583	0.55	6.583	1.85	12.583	2.15	18.58	0.79
0.667	0.55	6.667	1.85	12.667	2.15	18.67	0.79
0.750	0.56	6.750	2.00	12.750	2.04	18.75	0.77
0.833	0.56	6.833	2.00	12.833	2.04	18.83	0.77
0.917	0.57	6.917	2.16	12.917	1.95	18.92	0.76
1.000	0.57	7.000	2.16	13.000	1.95	19.00	0.76
1.083	0.58	7.083	2.35	13.083	1.87	19.08	0.75
1.167	0.58	7.167	2.35	13.167	1.87	19.17	0.75
1.250	0.60	7.250	2.59	13.250	1.79	19.25	0.74
1.333	0.60	7.333	2.59	13.333	1.79	19.33	0.74
1.417	0.61	7.417	2.87	13.417	1.72	19.42	0.73
1.500	0.61	7.500	2.87	13.500	1.72	19.50	0.73
1.583	0.62	7.583	3.23	13.583	1.65	19.58	0.72
1.667	0.62	7.667	3.23	13.667	1.65	19.67	0.72
1.750	0.63	7.750	3.69	13.750	1.59	19.75	0.71
1.833	0.63	7.833	3.69	13.833	1.59	19.83	0.71
1.917	0.65	7.917	4.30	13.917	1.54	19.92	0.69
2.000	0.65	8.000	4.30	14.000	1.54	20.00	0.69
2.083	0.66	8.083	5.16	14.083	1.48	20.08	0.68
2.167	0.66	8.167	5.16	14.167	1.48	20.17	0.68
2.250	0.68	8.250	6.42	14.250	1.44	20.25	0.68
2.333	0.68	8.333	6.42	14.333	1.44	20.33	0.68
2.417	0.70	8.417	8.44	14.417	1.39	20.42	0.67
2.500	0.70	8.500	8.44	14.500	1.39	20.50	0.67
2.583	0.71	8.583	12.12	14.583	1.35	20.58	0.66
2.667	0.71	8.667	12.12	14.667	1.35	20.67	0.66
2.750	0.73	8.750	20.49	14.750	1.31	20.75	0.65
2.833	0.73	8.833	20.49	14.833	1.31	20.83	0.65
2.917	0.75	8.917	51.45	14.917	1.27	20.92	0.64
3.000	0.75	9.000	51.45	15.000	1.27	21.00	0.64
3.083	0.77	9.083	157.29	15.083	1.24	21.08	0.63
3.167	0.77	9.167	157.29	15.167	1.24	21.17	0.63
3.250	0.79	9.250	62.45	15.250	1.20	21.25	0.62
3.333	0.79	9.333	62.45	15.333	1.20	21.33	0.62
3.417	0.81	9.417	31.10	15.417	1.17	21.42	0.61
3.500	0.81	9.500	31.10	15.500	1.17	21.50	0.61
3.583	0.84	9.583	19.70	15.583	1.14	21.58	0.61
3.667	0.84	9.667	19.70	15.667	1.14	21.67	0.61

3.750	0.86	9.750	14.09	15.750	1.11	21.75	0.60
3.833	0.86	9.833	14.09	15.833	1.11	21.83	0.60
3.917	0.89	9.917	10.83	15.917	1.09	21.92	0.59
4.000	0.89	10.000	10.83	16.000	1.09	22.00	0.59
4.083	0.92	10.083	8.74	16.083	1.06	22.08	0.58
4.167	0.92	10.167	8.74	16.167	1.06	22.17	0.58
4.250	0.95	10.250	7.30	16.250	1.04	22.25	0.58
4.333	0.95	10.333	7.30	16.333	1.04	22.33	0.58
4.417	0.98	10.417	6.25	16.417	1.01	22.42	0.57
4.500	0.98	10.500	6.25	16.500	1.01	22.50	0.57
4.583	1.02	10.583	5.46	16.583	0.99	22.58	0.56
4.667	1.02	10.667	5.46	16.667	0.99	22.67	0.56
4.750	1.06	10.750	4.84	16.750	0.97	22.75	0.56
4.833	1.06	10.833	4.84	16.833	0.97	22.83	0.56
4.917	1.10	10.917	4.35	16.917	0.95	22.92	0.55
5.000	1.10	11.000	4.35	17.000	0.95	23.00	0.55
5.083	1.15	11.083	3.94	17.083	0.93	23.08	0.55
5.167	1.15	11.167	3.94	17.167	0.93	23.17	0.55
5.250	1.20	11.250	3.61	17.250	0.91	23.25	0.54
5.333	1.20	11.333	3.61	17.333	0.91	23.33	0.54
5.417	1.25	11.417	3.32	17.417	0.89	23.42	0.53
5.500	1.25	11.500	3.32	17.500	0.89	23.50	0.53
5.583	1.31	11.583	3.08	17.583	0.88	23.58	0.53
5.667	1.31	11.667	3.08	17.667	0.88	23.67	0.53
5.750	1.38	11.750	2.87	17.750	0.86	23.75	0.52
5.833	1.38	11.833	2.87	17.833	0.86	23.83	0.52
5.917	1.45	11.917	2.69	17.917	0.85	23.92	0.52
6.000	1.45	12.000	2.69	18.000	0.85	24.00	0.52

Max.Eff.Inten.(mm/hr)=	157.29	126.10		
over (min)	5.00	10.00		
Storage Coeff. (min)=	2.89 (ii)	9.32 (ii)		
Unit Hyd. Tpeak (min)=	5.00	10.00		
Unit Hyd. peak (cms)=	0.28	0.12		
			TOTALS	
PEAK FLOW (cms)=	0.53	0.55	0.997 (iii)	
TIME TO PEAK (hrs)=	9.17	9.25	9.17	
RUNOFF VOLUME (mm)=	97.20	60.09	71.22	
TOTAL RAINFALL (mm)=	98.20	98.20	98.20	
RUNOFF COEFFICIENT =	0.99	0.61	0.73	

***** WARNING: STORAGE COEFF. IS SMALLER THAN TIME STEP!

(i) CN PROCEDURE SELECTED FOR PERVIOUS LOSSES:
CN* = 77.0 Ia = Dep. Storage (Above)
(ii) TIME STEP (DT) SHOULD BE SMALLER OR EQUAL
THAN THE STORAGE COEFFICIENT.
(iii) PEAK FLOW DOES NOT INCLUDE BASEFLOW IF ANY.

ADD HYD (25000)				
1 + 2 = 3	AREA (ha)	QPEAK (cms)	TPEAK (hrs)	R.V. (mm)
ID1= 1 (2500):	4.12	0.997	9.17	71.22
+ ID2= 2 (25001):	72.76	3.567	10.17	51.46
ID = 3 (25000):	76.88	3.668	10.17	52.52

NOTE: PEAK FLOWS DO NOT INCLUDE BASEFLOWS IF ANY.

CALIB

| STANDHYD (2401)| Area (ha)= 4.17
|ID= 1 DT= 5.0 min | Total Imp(%)= 87.00 Dir. Conn.(%)= 29.00

		IMPERVIOUS	PERVIOUS (i)
Surface Area	(ha)=	3.63	0.54
Dep. Storage	(mm)=	1.00	1.50
Average Slope	(%)=	1.00	2.00
Length	(m)=	166.73	40.00
Mannings n	=	0.013	0.250

NOTE: RAINFALL WAS TRANSFORMED TO 5.0 MIN. TIME STEP.

---- TRANSFORMED HYETOGRAPH ----

TIME hrs	RAIN mm/hr	TIME hrs	RAIN mm/hr	TIME hrs	RAIN mm/hr	TIME hrs	RAIN mm/hr
0.083	0.52	6.083	1.53	12.083	2.53	18.08	0.83
0.167	0.52	6.167	1.53	12.167	2.53	18.17	0.83
0.250	0.53	6.250	1.63	12.250	2.39	18.25	0.82
0.333	0.53	6.333	1.63	12.333	2.39	18.33	0.82
0.417	0.54	6.417	1.73	12.417	2.26	18.42	0.80
0.500	0.54	6.500	1.73	12.500	2.26	18.50	0.80
0.583	0.55	6.583	1.85	12.583	2.15	18.58	0.79
0.667	0.55	6.667	1.85	12.667	2.15	18.67	0.79
0.750	0.56	6.750	2.00	12.750	2.04	18.75	0.77
0.833	0.56	6.833	2.00	12.833	2.04	18.83	0.77
0.917	0.57	6.917	2.16	12.917	1.95	18.92	0.76
1.000	0.57	7.000	2.16	13.000	1.95	19.00	0.76
1.083	0.58	7.083	2.35	13.083	1.87	19.08	0.75
1.167	0.58	7.167	2.35	13.167	1.87	19.17	0.75
1.250	0.60	7.250	2.59	13.250	1.79	19.25	0.74
1.333	0.60	7.333	2.59	13.333	1.79	19.33	0.74
1.417	0.61	7.417	2.87	13.417	1.72	19.42	0.73
1.500	0.61	7.500	2.87	13.500	1.72	19.50	0.73
1.583	0.62	7.583	3.23	13.583	1.65	19.58	0.72
1.667	0.62	7.667	3.23	13.667	1.65	19.67	0.72
1.750	0.63	7.750	3.69	13.750	1.59	19.75	0.71
1.833	0.63	7.833	3.69	13.833	1.59	19.83	0.71
1.917	0.65	7.917	4.30	13.917	1.54	19.92	0.69
2.000	0.65	8.000	4.30	14.000	1.54	20.00	0.69
2.083	0.66	8.083	5.16	14.083	1.48	20.08	0.68
2.167	0.66	8.167	5.16	14.167	1.48	20.17	0.68
2.250	0.68	8.250	6.42	14.250	1.44	20.25	0.68
2.333	0.68	8.333	6.42	14.333	1.44	20.33	0.68
2.417	0.70	8.417	8.44	14.417	1.39	20.42	0.67
2.500	0.70	8.500	8.44	14.500	1.39	20.50	0.67
2.583	0.71	8.583	12.12	14.583	1.35	20.58	0.66
2.667	0.71	8.667	12.12	14.667	1.35	20.67	0.66
2.750	0.73	8.750	20.49	14.750	1.31	20.75	0.65
2.833	0.73	8.833	20.49	14.833	1.31	20.83	0.65
2.917	0.75	8.917	51.45	14.917	1.27	20.92	0.64
3.000	0.75	9.000	51.45	15.000	1.27	21.00	0.64
3.083	0.77	9.083	157.29	15.083	1.24	21.08	0.63
3.167	0.77	9.167	157.29	15.167	1.24	21.17	0.63
3.250	0.79	9.250	62.45	15.250	1.20	21.25	0.62
3.333	0.79	9.333	62.45	15.333	1.20	21.33	0.62
3.417	0.81	9.417	31.10	15.417	1.17	21.42	0.61
3.500	0.81	9.500	31.10	15.500	1.17	21.50	0.61
3.583	0.84	9.583	19.70	15.583	1.14	21.58	0.61
3.667	0.84	9.667	19.70	15.667	1.14	21.67	0.61
3.750	0.86	9.750	14.09	15.750	1.11	21.75	0.60
3.833	0.86	9.833	14.09	15.833	1.11	21.83	0.60
3.917	0.89	9.917	10.83	15.917	1.09	21.92	0.59
4.000	0.89	10.000	10.83	16.000	1.09	22.00	0.59

4.083	0.92	10.083	8.74	16.083	1.06	22.08	0.58
4.167	0.92	10.167	8.74	16.167	1.06	22.17	0.58
4.250	0.95	10.250	7.30	16.250	1.04	22.25	0.58
4.333	0.95	10.333	7.30	16.333	1.04	22.33	0.58
4.417	0.98	10.417	6.25	16.417	1.01	22.42	0.57
4.500	0.98	10.500	6.25	16.500	1.01	22.50	0.57
4.583	1.02	10.583	5.46	16.583	0.99	22.58	0.56
4.667	1.02	10.667	5.46	16.667	0.99	22.67	0.56
4.750	1.06	10.750	4.84	16.750	0.97	22.75	0.56
4.833	1.06	10.833	4.84	16.833	0.97	22.83	0.56
4.917	1.10	10.917	4.35	16.917	0.95	22.92	0.55
5.000	1.10	11.000	4.35	17.000	0.95	23.00	0.55
5.083	1.15	11.083	3.94	17.083	0.93	23.08	0.55
5.167	1.15	11.167	3.94	17.167	0.93	23.17	0.55
5.250	1.20	11.250	3.61	17.250	0.91	23.25	0.54
5.333	1.20	11.333	3.61	17.333	0.91	23.33	0.54
5.417	1.25	11.417	3.32	17.417	0.89	23.42	0.53
5.500	1.25	11.500	3.32	17.500	0.89	23.50	0.53
5.583	1.31	11.583	3.08	17.583	0.88	23.58	0.53
5.667	1.31	11.667	3.08	17.667	0.88	23.67	0.53
5.750	1.38	11.750	2.87	17.750	0.86	23.75	0.52
5.833	1.38	11.833	2.87	17.833	0.86	23.83	0.52
5.917	1.45	11.917	2.69	17.917	0.85	23.92	0.52
6.000	1.45	12.000	2.69	18.000	0.85	24.00	0.52

Max.Eff.Inten.(mm/hr)=	157.29		857.89	
over (min)	5.00		10.00	
Storage Coeff. (min)=	2.90	(ii)	7.17	(ii)
Unit Hyd. Tpeak (min)=	5.00		10.00	
Unit Hyd. peak (cms)=	0.28		0.14	
				TOTALS
PEAK FLOW (cms)=	0.52		0.95	1.436 (iii)
TIME TO PEAK (hrs)=	9.17		9.25	9.17
RUNOFF VOLUME (mm)=	97.20		96.50	96.70
TOTAL RAINFALL (mm)=	98.20		98.20	98.20
RUNOFF COEFFICIENT =	0.99		0.98	0.98

***** WARNING: STORAGE COEFF. IS SMALLER THAN TIME STEP!

(i) CN PROCEDURE SELECTED FOR PERVIOUS LOSSES:
CN* = 97.0 Ia = Dep. Storage (Above)
(ii) TIME STEP (DT) SHOULD BE SMALLER OR EQUAL
THAN THE STORAGE COEFFICIENT.
(iii) PEAK FLOW DOES NOT INCLUDE BASEFLOW IF ANY.

ADD HYD (0020)		AREA	QPEAK	TPEAK	R.V.
		(ha)	(cms)	(hrs)	(mm)
1 + 2 = 3	ID1= 1 (2401):	4.17	1.436	9.17	96.70
	+ ID2= 2 (25000):	76.88	3.668	10.17	52.52
	ID = 3 (0020):	81.05	3.785	10.08	54.79

NOTE: PEAK FLOWS DO NOT INCLUDE BASEFLOWS IF ANY.

ROUTE CHN(24001)
IN= 2---> OUT= 1 | Routing time step (min)'= 5.00

<------ DATA FOR SECTION (1.1) ------>

Distance	Elevation	Manning

0.00	256.91	0.0800	
30.30	256.72	0.0800 /0.0350	Main Channel
35.77	256.32	0.0350	Main Channel
37.26	256.30	0.0350	Main Channel
40.74	256.75	0.0350 /0.0800	Main Channel
71.50	257.50	0.0800	

<---------- TRAVEL TIME TABLE ---------->

DEPTH (m)	ELEV (m)	VOLUME (cu.m.)	FLOW RATE (cms)	VELOCITY (m/s)	TRAV.TIME (min)
0.03	256.33	.464E+01	0.0	0.08	29.70
0.06	256.36	.136E+02	0.0	0.13	17.71
0.09	256.39	.252E+02	0.0	0.17	13.68
0.12	256.42	.394E+02	0.1	0.20	11.49
0.15	256.45	.562E+02	0.1	0.23	10.06
0.18	256.48	.757E+02	0.1	0.25	9.03
0.21	256.51	.978E+02	0.2	0.28	8.24
0.24	256.54	.123E+03	0.3	0.30	7.62
0.27	256.57	.150E+03	0.4	0.32	7.10
0.30	256.60	.180E+03	0.5	0.34	6.67
0.33	256.63	.213E+03	0.6	0.36	6.29
0.36	256.66	.248E+03	0.7	0.38	5.97
0.39	256.69	.286E+03	0.8	0.40	5.69
0.42	256.72	.326E+03	1.0	0.42	5.44
0.46	256.76	.396E+03	1.3	0.44	5.18
0.50	256.80	.504E+03	1.6	0.44	5.20
0.53	256.83	.650E+03	2.0	0.42	5.38
0.57	256.87	.837E+03	2.5	0.41	5.61
0.61	256.91	.106E+04	3.0	0.39	5.84

**** WARNING: TRAVEL TIME TABLE EXCEEDED

	AREA (ha)	<---- hydrograph ----> QPEAK (cms)	TPEAK (hrs)	R.V. (mm)	<-pipe / channel-> MAX DEPTH (m)	MAX VEL (m/s)
INFLOW : ID= 2 (0020)	81.05	3.79	10.08	54.79	0.60	0.39
OUTFLOW: ID= 1 (24001)	81.05	3.77	10.17	54.79	0.60	0.39

CALIB STANDHYD (2400) ID= 1 DT= 5.0 min	Area (ha)= 2.47 Total Imp(%)= 26.00 Dir. Conn.(%)= 15.00

		IMPERVIOUS	PERVIOUS (i)
Surface Area	(ha)=	0.64	1.83
Dep. Storage	(mm)=	1.00	1.50
Average Slope	(%)=	1.00	2.00
Length	(m)=	128.32	40.00
Mannings n	=	0.013	0.250

NOTE: RAINFALL WAS TRANSFORMED TO 5.0 MIN. TIME STEP.

---- TRANSFORMED HYETOGRAPH ----

TIME hrs	RAIN mm/hr	TIME hrs	RAIN mm/hr	TIME hrs	RAIN mm/hr	TIME hrs	RAIN mm/hr
0.083	0.52	6.083	1.53	12.083	2.53	18.08	0.83
0.167	0.52	6.167	1.53	12.167	2.53	18.17	0.83
0.250	0.53	6.250	1.63	12.250	2.39	18.25	0.82
0.333	0.53	6.333	1.63	12.333	2.39	18.33	0.82
0.417	0.54	6.417	1.73	12.417	2.26	18.42	0.80
0.500	0.54	6.500	1.73	12.500	2.26	18.50	0.80

0.583	0.55	6.583	1.85	12.583	2.15	18.58	0.79
0.667	0.55	6.667	1.85	12.667	2.15	18.67	0.79
0.750	0.56	6.750	2.00	12.750	2.04	18.75	0.77
0.833	0.56	6.833	2.00	12.833	2.04	18.83	0.77
0.917	0.57	6.917	2.16	12.917	1.95	18.92	0.76
1.000	0.57	7.000	2.16	13.000	1.95	19.00	0.76
1.083	0.58	7.083	2.35	13.083	1.87	19.08	0.75
1.167	0.58	7.167	2.35	13.167	1.87	19.17	0.75
1.250	0.60	7.250	2.59	13.250	1.79	19.25	0.74
1.333	0.60	7.333	2.59	13.333	1.79	19.33	0.74
1.417	0.61	7.417	2.87	13.417	1.72	19.42	0.73
1.500	0.61	7.500	2.87	13.500	1.72	19.50	0.73
1.583	0.62	7.583	3.23	13.583	1.65	19.58	0.72
1.667	0.62	7.667	3.23	13.667	1.65	19.67	0.72
1.750	0.63	7.750	3.69	13.750	1.59	19.75	0.71
1.833	0.63	7.833	3.69	13.833	1.59	19.83	0.71
1.917	0.65	7.917	4.30	13.917	1.54	19.92	0.69
2.000	0.65	8.000	4.30	14.000	1.54	20.00	0.69
2.083	0.66	8.083	5.16	14.083	1.48	20.08	0.68
2.167	0.66	8.167	5.16	14.167	1.48	20.17	0.68
2.250	0.68	8.250	6.42	14.250	1.44	20.25	0.68
2.333	0.68	8.333	6.42	14.333	1.44	20.33	0.68
2.417	0.70	8.417	8.44	14.417	1.39	20.42	0.67
2.500	0.70	8.500	8.44	14.500	1.39	20.50	0.67
2.583	0.71	8.583	12.12	14.583	1.35	20.58	0.66
2.667	0.71	8.667	12.12	14.667	1.35	20.67	0.66
2.750	0.73	8.750	20.49	14.750	1.31	20.75	0.65
2.833	0.73	8.833	20.49	14.833	1.31	20.83	0.65
2.917	0.75	8.917	51.45	14.917	1.27	20.92	0.64
3.000	0.75	9.000	51.45	15.000	1.27	21.00	0.64
3.083	0.77	9.083	157.29	15.083	1.24	21.08	0.63
3.167	0.77	9.167	157.29	15.167	1.24	21.17	0.63
3.250	0.79	9.250	62.45	15.250	1.20	21.25	0.62
3.333	0.79	9.333	62.45	15.333	1.20	21.33	0.62
3.417	0.81	9.417	31.10	15.417	1.17	21.42	0.61
3.500	0.81	9.500	31.10	15.500	1.17	21.50	0.61
3.583	0.84	9.583	19.70	15.583	1.14	21.58	0.61
3.667	0.84	9.667	19.70	15.667	1.14	21.67	0.61
3.750	0.86	9.750	14.09	15.750	1.11	21.75	0.60
3.833	0.86	9.833	14.09	15.833	1.11	21.83	0.60
3.917	0.89	9.917	10.83	15.917	1.09	21.92	0.59
4.000	0.89	10.000	10.83	16.000	1.09	22.00	0.59
4.083	0.92	10.083	8.74	16.083	1.06	22.08	0.58
4.167	0.92	10.167	8.74	16.167	1.06	22.17	0.58
4.250	0.95	10.250	7.30	16.250	1.04	22.25	0.58
4.333	0.95	10.333	7.30	16.333	1.04	22.33	0.58
4.417	0.98	10.417	6.25	16.417	1.01	22.42	0.57
4.500	0.98	10.500	6.25	16.500	1.01	22.50	0.57
4.583	1.02	10.583	5.46	16.583	0.99	22.58	0.56
4.667	1.02	10.667	5.46	16.667	0.99	22.67	0.56
4.750	1.06	10.750	4.84	16.750	0.97	22.75	0.56
4.833	1.06	10.833	4.84	16.833	0.97	22.83	0.56
4.917	1.10	10.917	4.35	16.917	0.95	22.92	0.55
5.000	1.10	11.000	4.35	17.000	0.95	23.00	0.55
5.083	1.15	11.083	3.94	17.083	0.93	23.08	0.55
5.167	1.15	11.167	3.94	17.167	0.93	23.17	0.55
5.250	1.20	11.250	3.61	17.250	0.91	23.25	0.54
5.333	1.20	11.333	3.61	17.333	0.91	23.33	0.54
5.417	1.25	11.417	3.32	17.417	0.89	23.42	0.53
5.500	1.25	11.500	3.32	17.500	0.89	23.50	0.53
5.583	1.31	11.583	3.08	17.583	0.88	23.58	0.53
5.667	1.31	11.667	3.08	17.667	0.88	23.67	0.53
5.750	1.38	11.750	2.87	17.750	0.86	23.75	0.52
5.833	1.38	11.833	2.87	17.833	0.86	23.83	0.52

5.917	1.45	11.917	2.69	17.917	0.85	23.92	0.52
6.000	1.45	12.000	2.69	18.000	0.85	24.00	0.52

Max.Eff.Inten.(mm/hr)=	157.29	89.28	
over (min)	5.00	10.00	
Storage Coeff. (min)=	2.48 (ii)	9.86 (ii)	
Unit Hyd. Tpeak (min)=	5.00	10.00	
Unit Hyd. peak (cms)=	0.29	0.11	
			TOTALS
PEAK FLOW (cms)=	0.16	0.31	0.416 (iii)
TIME TO PEAK (hrs)=	9.17	9.25	9.17
RUNOFF VOLUME (mm)=	97.20	48.98	56.21
TOTAL RAINFALL (mm)=	98.20	98.20	98.20
RUNOFF COEFFICIENT =	0.99	0.50	0.57

***** WARNING: STORAGE COEFF. IS SMALLER THAN TIME STEP!
***** WARNING:FOR AREAS WITH IMPERVIOUS RATIOS BELOW 20%
YOU SHOULD CONSIDER SPLITTING THE AREA.

(i) CN PROCEDURE SELECTED FOR PERVIOUS LOSSES:
CN* = 70.0 Ia = Dep. Storage (Above)
(ii) TIME STEP (DT) SHOULD BE SMALLER OR EQUAL
THAN THE STORAGE COEFFICIENT.
(iii) PEAK FLOW DOES NOT INCLUDE BASEFLOW IF ANY.

ADD HYD (24000)		AREA	QPEAK	TPEAK	R.V.
		(ha)	(cms)	(hrs)	(mm)
1 + 2 = 3	ID1= 1 (2400):	2.47	0.416	9.17	56.21
	+ ID2= 2 (24001):	81.05	3.771	10.17	54.79
	ID = 3 (24000):	83.52	3.825	10.17	54.83

NOTE: PEAK FLOWS DO NOT INCLUDE BASEFLOWS IF ANY.

ROUTE CHN(24002)
IN= 2---> OUT= 1 | Routing time step (min)'= 5.00

<------ DATA FOR SECTION (1.1) ------>

Distance	Elevation	Manning	
0.00	256.91	0.0800	
30.30	256.72	0.0800 /0.0350	Main Channel
35.77	256.32	0.0350	Main Channel
37.26	256.30	0.0350	Main Channel
40.74	256.75	0.0350 /0.0800	Main Channel
71.50	257.50	0.0800	

<---------- TRAVEL TIME TABLE ---------->

DEPTH (m)	ELEV (m)	VOLUME (cu.m.)	FLOW RATE (cms)	VELOCITY (m/s)	TRAV.TIME (min)
0.03	256.33	.248E+01	0.0	0.30	4.00
0.06	256.36	.726E+01	0.1	0.51	2.39
0.09	256.39	.135E+02	0.1	0.66	1.84
0.12	256.42	.211E+02	0.2	0.79	1.55
0.15	256.45	.301E+02	0.4	0.90	1.36
0.18	256.48	.405E+02	0.6	1.00	1.22
0.21	256.51	.523E+02	0.8	1.10	1.11
0.24	256.54	.655E+02	1.1	1.19	1.03
0.27	256.57	.802E+02	1.4	1.27	0.96
0.30	256.60	.962E+02	1.8	1.36	0.90

0.33	256.63	.114E+03	2.2	1.44	0.85
0.36	256.66	.133E+03	2.7	1.51	0.81
0.39	256.69	.153E+03	3.3	1.59	0.77
0.42	256.72	.175E+03	4.0	1.66	0.73
0.46	256.76	.212E+03	5.1	1.74	0.70
0.50	256.80	.269E+03	6.4	1.74	0.70
0.53	256.83	.348E+03	8.0	1.68	0.73
0.57	256.87	.448E+03	9.9	1.61	0.76
0.61	256.91	.568E+03	12.0	1.55	0.79

	<---- hydrograph ---->			<-pipe / channel->	
	AREA (ha)	QPEAK (cms)	TPEAK (hrs)	R.V. (mm)	MAX DEPTH (m)	MAX VEL (m/s)
INFLOW : ID= 2 (24000)	83.52	3.82	10.17	54.83	0.41	1.64
OUTFLOW: ID= 1 (24002)	83.52	3.82	10.17	54.83	0.41	1.64

CALIB NASHYD (2101) ID= 1 DT= 5.0 min	Area (ha)= 0.04	Curve Number (CN)= 67.0
	Ia (mm)= 5.00	# of Linear Res.(N)= 3.00
	U.H. Tp(hrs)= 0.12	

NOTE: RAINFALL WAS TRANSFORMED TO 5.0 MIN. TIME STEP.

---- TRANSFORMED HYETOGRAPH ----

TIME hrs	RAIN mm/hr	TIME hrs	RAIN mm/hr	TIME hrs	RAIN mm/hr	TIME hrs	RAIN mm/hr
0.083	0.52	6.083	1.53	12.083	2.53	18.08	0.83
0.167	0.52	6.167	1.53	12.167	2.53	18.17	0.83
0.250	0.53	6.250	1.63	12.250	2.39	18.25	0.82
0.333	0.53	6.333	1.63	12.333	2.39	18.33	0.82
0.417	0.54	6.417	1.73	12.417	2.26	18.42	0.80
0.500	0.54	6.500	1.73	12.500	2.26	18.50	0.80
0.583	0.55	6.583	1.85	12.583	2.15	18.58	0.79
0.667	0.55	6.667	1.85	12.667	2.15	18.67	0.79
0.750	0.56	6.750	2.00	12.750	2.04	18.75	0.77
0.833	0.56	6.833	2.00	12.833	2.04	18.83	0.77
0.917	0.57	6.917	2.16	12.917	1.95	18.92	0.76
1.000	0.57	7.000	2.16	13.000	1.95	19.00	0.76
1.083	0.58	7.083	2.35	13.083	1.87	19.08	0.75
1.167	0.58	7.167	2.35	13.167	1.87	19.17	0.75
1.250	0.60	7.250	2.59	13.250	1.79	19.25	0.74
1.333	0.60	7.333	2.59	13.333	1.79	19.33	0.74
1.417	0.61	7.417	2.87	13.417	1.72	19.42	0.73
1.500	0.61	7.500	2.87	13.500	1.72	19.50	0.73
1.583	0.62	7.583	3.23	13.583	1.65	19.58	0.72
1.667	0.62	7.667	3.23	13.667	1.65	19.67	0.72
1.750	0.63	7.750	3.69	13.750	1.59	19.75	0.71
1.833	0.63	7.833	3.69	13.833	1.59	19.83	0.71
1.917	0.65	7.917	4.30	13.917	1.54	19.92	0.69
2.000	0.65	8.000	4.30	14.000	1.54	20.00	0.69
2.083	0.66	8.083	5.16	14.083	1.48	20.08	0.68
2.167	0.66	8.167	5.16	14.167	1.48	20.17	0.68
2.250	0.68	8.250	6.42	14.250	1.44	20.25	0.68
2.333	0.68	8.333	6.42	14.333	1.44	20.33	0.68
2.417	0.70	8.417	8.44	14.417	1.39	20.42	0.67
2.500	0.70	8.500	8.44	14.500	1.39	20.50	0.67
2.583	0.71	8.583	12.12	14.583	1.35	20.58	0.66
2.667	0.71	8.667	12.12	14.667	1.35	20.67	0.66
2.750	0.73	8.750	20.49	14.750	1.31	20.75	0.65

2.833	0.73	8.833	20.49	14.833	1.31	20.83	0.65
2.917	0.75	8.917	51.45	14.917	1.27	20.92	0.64
3.000	0.75	9.000	51.45	15.000	1.27	21.00	0.64
3.083	0.77	9.083	157.29	15.083	1.24	21.08	0.63
3.167	0.77	9.167	157.29	15.167	1.24	21.17	0.63
3.250	0.79	9.250	62.45	15.250	1.20	21.25	0.62
3.333	0.79	9.333	62.45	15.333	1.20	21.33	0.62
3.417	0.81	9.417	31.10	15.417	1.17	21.42	0.61
3.500	0.81	9.500	31.10	15.500	1.17	21.50	0.61
3.583	0.84	9.583	19.70	15.583	1.14	21.58	0.61
3.667	0.84	9.667	19.70	15.667	1.14	21.67	0.61
3.750	0.86	9.750	14.09	15.750	1.11	21.75	0.60
3.833	0.86	9.833	14.09	15.833	1.11	21.83	0.60
3.917	0.89	9.917	10.83	15.917	1.09	21.92	0.59
4.000	0.89	10.000	10.83	16.000	1.09	22.00	0.59
4.083	0.92	10.083	8.74	16.083	1.06	22.08	0.58
4.167	0.92	10.167	8.74	16.167	1.06	22.17	0.58
4.250	0.95	10.250	7.30	16.250	1.04	22.25	0.58
4.333	0.95	10.333	7.30	16.333	1.04	22.33	0.58
4.417	0.98	10.417	6.25	16.417	1.01	22.42	0.57
4.500	0.98	10.500	6.25	16.500	1.01	22.50	0.57
4.583	1.02	10.583	5.46	16.583	0.99	22.58	0.56
4.667	1.02	10.667	5.46	16.667	0.99	22.67	0.56
4.750	1.06	10.750	4.84	16.750	0.97	22.75	0.56
4.833	1.06	10.833	4.84	16.833	0.97	22.83	0.56
4.917	1.10	10.917	4.35	16.917	0.95	22.92	0.55
5.000	1.10	11.000	4.35	17.000	0.95	23.00	0.55
5.083	1.15	11.083	3.94	17.083	0.93	23.08	0.55
5.167	1.15	11.167	3.94	17.167	0.93	23.17	0.55
5.250	1.20	11.250	3.61	17.250	0.91	23.25	0.54
5.333	1.20	11.333	3.61	17.333	0.91	23.33	0.54
5.417	1.25	11.417	3.32	17.417	0.89	23.42	0.53
5.500	1.25	11.500	3.32	17.500	0.89	23.50	0.53
5.583	1.31	11.583	3.08	17.583	0.88	23.58	0.53
5.667	1.31	11.667	3.08	17.667	0.88	23.67	0.53
5.750	1.38	11.750	2.87	17.750	0.86	23.75	0.52
5.833	1.38	11.833	2.87	17.833	0.86	23.83	0.52
5.917	1.45	11.917	2.69	17.917	0.85	23.92	0.52
6.000	1.45	12.000	2.69	18.000	0.85	24.00	0.52

Unit Hyd Qpeak (cms)= 0.013

PEAK FLOW (cms)= 0.005 (i)
TIME TO PEAK (hrs)= 9.250
RUNOFF VOLUME (mm)= 39.249
TOTAL RAINFALL (mm)= 98.197
RUNOFF COEFFICIENT = 0.400

(i) PEAK FLOW DOES NOT INCLUDE BASEFLOW IF ANY.

ADD HYD (0019)				
1 + 2 = 3	AREA (ha)	QPEAK (cms)	TPEAK (hrs)	R.V. (mm)
ID1= 1 (2101):	0.04	0.005	9.25	39.25
+ ID2= 2 (24002):	83.52	3.824	10.17	54.83
ID = 3 (0019):	83.56	3.825	10.17	54.82

NOTE: PEAK FLOWS DO NOT INCLUDE BASEFLOWS IF ANY.

```
--------------------
| ADD HYD  (  0014)|
|   1 +  2 =  3    |          AREA     QPEAK     TPEAK      R.V.
--------------------          (ha)     (cms)     (hrs)      (mm)
        ID1= 1 (  0019):     83.56    3.825     10.17     54.82
      + ID2= 2 ( 22000):     14.78    2.339      9.25     61.22
        ==========================================================
        ID = 3 (  0014):     98.34    5.634      9.33     55.79

     NOTE:  PEAK FLOWS DO NOT INCLUDE BASEFLOWS IF ANY.
------------------------------------------------------------------------------
--------------------
| ROUTE CHN( 21001)|
| IN= 2---> OUT= 1 |     Routing time step (min)'=  5.00
--------------------
               <------ DATA FOR SECTION (   1.1) ------>
               Distance      Elevation       Manning
                   0.00          0.15         0.0110
                   0.01          0.00    0.0110 /0.0110  Main Channel
                   4.26          0.02         0.0110      Main Channel
                   8.51          0.00    0.0110 /0.0110  Main Channel
                   8.52          0.15         0.0110

      <---------------------- TRAVEL TIME TABLE ---------------------->
       DEPTH     ELEV       VOLUME     FLOW RATE     VELOCITY   TRAV.TIME
        (m)       (m)      (cu.m.)       (cms)         (m/s)      (min)
       0.01      0.01     .325E+00        0.0          0.16        2.71
       0.02      0.02     .130E+01        0.0          0.25        1.71
       0.02      0.02     .290E+01        0.0          0.36        1.22
       0.03      0.03     .465E+01        0.1          0.49        0.89
       0.04      0.04     .640E+01        0.1          0.60        0.72
       0.05      0.05     .815E+01        0.2          0.71        0.61
       0.06      0.06     .991E+01        0.3          0.81        0.54
       0.06      0.06     .117E+02        0.4          0.90        0.48
       0.07      0.07     .134E+02        0.5          0.99        0.44
       0.08      0.08     .152E+02        0.6          1.07        0.41
       0.09      0.09     .169E+02        0.7          1.15        0.38
       0.09      0.09     .187E+02        0.9          1.23        0.35
       0.10      0.10     .204E+02        1.0          1.31        0.33
       0.11      0.11     .222E+02        1.2          1.38        0.31
       0.12      0.12     .239E+02        1.3          1.45        0.30
       0.13      0.13     .257E+02        1.5          1.52        0.29
       0.13      0.13     .274E+02        1.7          1.59        0.27
       0.14      0.14     .292E+02        1.9          1.66        0.26
       0.15      0.15     .310E+02        2.0          1.73        0.25

     **** WARNING:  TRAVEL TIME TABLE EXCEEDED
                                      <---- hydrograph ---->   <-pipe / channel->
                              AREA     QPEAK    TPEAK    R.V.   MAX DEPTH  MAX VEL
                              (ha)     (cms)    (hrs)    (mm)      (m)       (m/s)
   INFLOW : ID= 2 (  0014)    98.34     5.63     9.33   55.79      0.15       1.70
   OUTFLOW: ID= 1 ( 21001)    98.34     5.66     9.33   55.79      0.15       1.72



------------------------------------------------------------------------------
--------------------
| CALIB              |
| STANDHYD (  2100)|   Area    (ha)=   0.05
|ID= 1 DT= 5.0 min |   Total Imp(%)=  89.00   Dir. Conn.(%)=  89.00
--------------------
                            IMPERVIOUS    PERVIOUS (i)
     Surface Area     (ha)=       0.04         0.01
     Dep. Storage     (mm)=       1.00         1.50
```

Average Slope	(%)=	1.00	2.00
Length	(m)=	18.26	40.00
Mannings n	=	0.013	0.250

NOTE: RAINFALL WAS TRANSFORMED TO 5.0 MIN. TIME STEP.

---- TRANSFORMED HYETOGRAPH ----

TIME hrs	RAIN mm/hr	TIME hrs	RAIN mm/hr	TIME hrs	RAIN mm/hr	TIME hrs	RAIN mm/hr
0.083	0.52	6.083	1.53	12.083	2.53	18.08	0.83
0.167	0.52	6.167	1.53	12.167	2.53	18.17	0.83
0.250	0.53	6.250	1.63	12.250	2.39	18.25	0.82
0.333	0.53	6.333	1.63	12.333	2.39	18.33	0.82
0.417	0.54	6.417	1.73	12.417	2.26	18.42	0.80
0.500	0.54	6.500	1.73	12.500	2.26	18.50	0.80
0.583	0.55	6.583	1.85	12.583	2.15	18.58	0.79
0.667	0.55	6.667	1.85	12.667	2.15	18.67	0.79
0.750	0.56	6.750	2.00	12.750	2.04	18.75	0.77
0.833	0.56	6.833	2.00	12.833	2.04	18.83	0.77
0.917	0.57	6.917	2.16	12.917	1.95	18.92	0.76
1.000	0.57	7.000	2.16	13.000	1.95	19.00	0.76
1.083	0.58	7.083	2.35	13.083	1.87	19.08	0.75
1.167	0.58	7.167	2.35	13.167	1.87	19.17	0.75
1.250	0.60	7.250	2.59	13.250	1.79	19.25	0.74
1.333	0.60	7.333	2.59	13.333	1.79	19.33	0.74
1.417	0.61	7.417	2.87	13.417	1.72	19.42	0.73
1.500	0.61	7.500	2.87	13.500	1.72	19.50	0.73
1.583	0.62	7.583	3.23	13.583	1.65	19.58	0.72
1.667	0.62	7.667	3.23	13.667	1.65	19.67	0.72
1.750	0.63	7.750	3.69	13.750	1.59	19.75	0.71
1.833	0.63	7.833	3.69	13.833	1.59	19.83	0.71
1.917	0.65	7.917	4.30	13.917	1.54	19.92	0.69
2.000	0.65	8.000	4.30	14.000	1.54	20.00	0.69
2.083	0.66	8.083	5.16	14.083	1.48	20.08	0.68
2.167	0.66	8.167	5.16	14.167	1.48	20.17	0.68
2.250	0.68	8.250	6.42	14.250	1.44	20.25	0.68
2.333	0.68	8.333	6.42	14.333	1.44	20.33	0.68
2.417	0.70	8.417	8.44	14.417	1.39	20.42	0.67
2.500	0.70	8.500	8.44	14.500	1.39	20.50	0.67
2.583	0.71	8.583	12.12	14.583	1.35	20.58	0.66
2.667	0.71	8.667	12.12	14.667	1.35	20.67	0.66
2.750	0.73	8.750	20.49	14.750	1.31	20.75	0.65
2.833	0.73	8.833	20.49	14.833	1.31	20.83	0.65
2.917	0.75	8.917	51.45	14.917	1.27	20.92	0.64
3.000	0.75	9.000	51.45	15.000	1.27	21.00	0.64
3.083	0.77	9.083	157.29	15.083	1.24	21.08	0.63
3.167	0.77	9.167	157.29	15.167	1.24	21.17	0.63
3.250	0.79	9.250	62.45	15.250	1.20	21.25	0.62
3.333	0.79	9.333	62.45	15.333	1.20	21.33	0.62
3.417	0.81	9.417	31.10	15.417	1.17	21.42	0.61
3.500	0.81	9.500	31.10	15.500	1.17	21.50	0.61
3.583	0.84	9.583	19.70	15.583	1.14	21.58	0.61
3.667	0.84	9.667	19.70	15.667	1.14	21.67	0.61
3.750	0.86	9.750	14.09	15.750	1.11	21.75	0.60
3.833	0.86	9.833	14.09	15.833	1.11	21.83	0.60
3.917	0.89	9.917	10.83	15.917	1.09	21.92	0.59
4.000	0.89	10.000	10.83	16.000	1.09	22.00	0.59
4.083	0.92	10.083	8.74	16.083	1.06	22.08	0.58
4.167	0.92	10.167	8.74	16.167	1.06	22.17	0.58
4.250	0.95	10.250	7.30	16.250	1.04	22.25	0.58
4.333	0.95	10.333	7.30	16.333	1.04	22.33	0.58
4.417	0.98	10.417	6.25	16.417	1.01	22.42	0.57
4.500	0.98	10.500	6.25	16.500	1.01	22.50	0.57

4.583	1.02	10.583	5.46	16.583	0.99	22.58	0.56
4.667	1.02	10.667	5.46	16.667	0.99	22.67	0.56
4.750	1.06	10.750	4.84	16.750	0.97	22.75	0.56
4.833	1.06	10.833	4.84	16.833	0.97	22.83	0.56
4.917	1.10	10.917	4.35	16.917	0.95	22.92	0.55
5.000	1.10	11.000	4.35	17.000	0.95	23.00	0.55
5.083	1.15	11.083	3.94	17.083	0.93	23.08	0.55
5.167	1.15	11.167	3.94	17.167	0.93	23.17	0.55
5.250	1.20	11.250	3.61	17.250	0.91	23.25	0.54
5.333	1.20	11.333	3.61	17.333	0.91	23.33	0.54
5.417	1.25	11.417	3.32	17.417	0.89	23.42	0.53
5.500	1.25	11.500	3.32	17.500	0.89	23.50	0.53
5.583	1.31	11.583	3.08	17.583	0.88	23.58	0.53
5.667	1.31	11.667	3.08	17.667	0.88	23.67	0.53
5.750	1.38	11.750	2.87	17.750	0.86	23.75	0.52
5.833	1.38	11.833	2.87	17.833	0.86	23.83	0.52
5.917	1.45	11.917	2.69	17.917	0.85	23.92	0.52
6.000	1.45	12.000	2.69	18.000	0.85	24.00	0.52

			TOTALS
Max.Eff.Inten.(mm/hr)=	157.29	156.62	
over (min)	5.00	5.00	
Storage Coeff. (min)=	0.77 (ii)	3.32 (ii)	
Unit Hyd. Tpeak (min)=	5.00	5.00	
Unit Hyd. peak (cms)=	0.34	0.26	
PEAK FLOW (cms)=	0.02	0.00	0.022 (iii)
TIME TO PEAK (hrs)=	9.17	9.17	9.17
RUNOFF VOLUME (mm)=	97.20	94.20	94.14
TOTAL RAINFALL (mm)=	98.20	98.20	98.20
RUNOFF COEFFICIENT =	0.99	0.96	0.96

***** WARNING: STORAGE COEFF. IS SMALLER THAN TIME STEP!

(i) CN PROCEDURE SELECTED FOR PERVIOUS LOSSES:
CN* = 99.0 Ia = Dep. Storage (Above)
(ii) TIME STEP (DT) SHOULD BE SMALLER OR EQUAL
THAN THE STORAGE COEFFICIENT.
(iii) PEAK FLOW DOES NOT INCLUDE BASEFLOW IF ANY.

ADD HYD (21000)		AREA	QPEAK	TPEAK	R.V.
1 + 2 = 3		(ha)	(cms)	(hrs)	(mm)
	ID1= 1 (2100):	0.05	0.022	9.17	94.14
	+ ID2= 2 (21001):	98.34	5.662	9.33	55.79
	ID = 3 (21000):	98.39	5.670	9.33	55.81

NOTE: PEAK FLOWS DO NOT INCLUDE BASEFLOWS IF ANY.

CALIB NASHYD (2001)	ID= 1 DT= 5.0 min				
	Area (ha)=	0.04	Curve Number (CN)=	69.0	
	Ia (mm)=	5.00	# of Linear Res.(N)=	3.00	
	U.H. Tp(hrs)=	0.19			

NOTE: RAINFALL WAS TRANSFORMED TO 5.0 MIN. TIME STEP.

---- TRANSFORMED HYETOGRAPH ----

TIME hrs	RAIN mm/hr	TIME hrs	RAIN mm/hr	TIME hrs	RAIN mm/hr	TIME hrs	RAIN mm/hr

0.083	0.52	6.083	1.53	12.083	2.53	18.08	0.83
0.167	0.52	6.167	1.53	12.167	2.53	18.17	0.83
0.250	0.53	6.250	1.63	12.250	2.39	18.25	0.82
0.333	0.53	6.333	1.63	12.333	2.39	18.33	0.82
0.417	0.54	6.417	1.73	12.417	2.26	18.42	0.80
0.500	0.54	6.500	1.73	12.500	2.26	18.50	0.80
0.583	0.55	6.583	1.85	12.583	2.15	18.58	0.79
0.667	0.55	6.667	1.85	12.667	2.15	18.67	0.79
0.750	0.56	6.750	2.00	12.750	2.04	18.75	0.77
0.833	0.56	6.833	2.00	12.833	2.04	18.83	0.77
0.917	0.57	6.917	2.16	12.917	1.95	18.92	0.76
1.000	0.57	7.000	2.16	13.000	1.95	19.00	0.76
1.083	0.58	7.083	2.35	13.083	1.87	19.08	0.75
1.167	0.58	7.167	2.35	13.167	1.87	19.17	0.75
1.250	0.60	7.250	2.59	13.250	1.79	19.25	0.74
1.333	0.60	7.333	2.59	13.333	1.79	19.33	0.74
1.417	0.61	7.417	2.87	13.417	1.72	19.42	0.73
1.500	0.61	7.500	2.87	13.500	1.72	19.50	0.73
1.583	0.62	7.583	3.23	13.583	1.65	19.58	0.72
1.667	0.62	7.667	3.23	13.667	1.65	19.67	0.72
1.750	0.63	7.750	3.69	13.750	1.59	19.75	0.71
1.833	0.63	7.833	3.69	13.833	1.59	19.83	0.71
1.917	0.65	7.917	4.30	13.917	1.54	19.92	0.69
2.000	0.65	8.000	4.30	14.000	1.54	20.00	0.69
2.083	0.66	8.083	5.16	14.083	1.48	20.08	0.68
2.167	0.66	8.167	5.16	14.167	1.48	20.17	0.68
2.250	0.68	8.250	6.42	14.250	1.44	20.25	0.68
2.333	0.68	8.333	6.42	14.333	1.44	20.33	0.68
2.417	0.70	8.417	8.44	14.417	1.39	20.42	0.67
2.500	0.70	8.500	8.44	14.500	1.39	20.50	0.67
2.583	0.71	8.583	12.12	14.583	1.35	20.58	0.66
2.667	0.71	8.667	12.12	14.667	1.35	20.67	0.66
2.750	0.73	8.750	20.49	14.750	1.31	20.75	0.65
2.833	0.73	8.833	20.49	14.833	1.31	20.83	0.65
2.917	0.75	8.917	51.45	14.917	1.27	20.92	0.64
3.000	0.75	9.000	51.45	15.000	1.27	21.00	0.64
3.083	0.77	9.083	157.29	15.083	1.24	21.08	0.63
3.167	0.77	9.167	157.29	15.167	1.24	21.17	0.63
3.250	0.79	9.250	62.45	15.250	1.20	21.25	0.62
3.333	0.79	9.333	62.45	15.333	1.20	21.33	0.62
3.417	0.81	9.417	31.10	15.417	1.17	21.42	0.61
3.500	0.81	9.500	31.10	15.500	1.17	21.50	0.61
3.583	0.84	9.583	19.70	15.583	1.14	21.58	0.61
3.667	0.84	9.667	19.70	15.667	1.14	21.67	0.61
3.750	0.86	9.750	14.09	15.750	1.11	21.75	0.60
3.833	0.86	9.833	14.09	15.833	1.11	21.83	0.60
3.917	0.89	9.917	10.83	15.917	1.09	21.92	0.59
4.000	0.89	10.000	10.83	16.000	1.09	22.00	0.59
4.083	0.92	10.083	8.74	16.083	1.06	22.08	0.58
4.167	0.92	10.167	8.74	16.167	1.06	22.17	0.58
4.250	0.95	10.250	7.30	16.250	1.04	22.25	0.58
4.333	0.95	10.333	7.30	16.333	1.04	22.33	0.58
4.417	0.98	10.417	6.25	16.417	1.01	22.42	0.57
4.500	0.98	10.500	6.25	16.500	1.01	22.50	0.57
4.583	1.02	10.583	5.46	16.583	0.99	22.58	0.56
4.667	1.02	10.667	5.46	16.667	0.99	22.67	0.56
4.750	1.06	10.750	4.84	16.750	0.97	22.75	0.56
4.833	1.06	10.833	4.84	16.833	0.97	22.83	0.56
4.917	1.10	10.917	4.35	16.917	0.95	22.92	0.55
5.000	1.10	11.000	4.35	17.000	0.95	23.00	0.55
5.083	1.15	11.083	3.94	17.083	0.93	23.08	0.55
5.167	1.15	11.167	3.94	17.167	0.93	23.17	0.55
5.250	1.20	11.250	3.61	17.250	0.91	23.25	0.54
5.333	1.20	11.333	3.61	17.333	0.91	23.33	0.54

5.417	1.25	11.417	3.32	17.417	0.89	23.42	0.53
5.500	1.25	11.500	3.32	17.500	0.89	23.50	0.53
5.583	1.31	11.583	3.08	17.583	0.88	23.58	0.53
5.667	1.31	11.667	3.08	17.667	0.88	23.67	0.53
5.750	1.38	11.750	2.87	17.750	0.86	23.75	0.52
5.833	1.38	11.833	2.87	17.833	0.86	23.83	0.52
5.917	1.45	11.917	2.69	17.917	0.85	23.92	0.52
6.000	1.45	12.000	2.69	18.000	0.85	24.00	0.52

Unit Hyd Qpeak (cms)= 0.008

PEAK FLOW (cms)= 0.004 (i)
TIME TO PEAK (hrs)= 9.333
RUNOFF VOLUME (mm)= 41.781
TOTAL RAINFALL (mm)= 98.197
RUNOFF COEFFICIENT = 0.425

(i) PEAK FLOW DOES NOT INCLUDE BASEFLOW IF ANY.

ADD HYD (0013)
1 + 2 = 3

	AREA (ha)	QPEAK (cms)	TPEAK (hrs)	R.V. (mm)
ID1= 1 (2001):	0.04	0.004	9.33	41.78
+ ID2= 2 (21000):	98.39	5.670	9.33	55.81
ID = 3 (0013):	98.43	5.675	9.33	55.80

NOTE: PEAK FLOWS DO NOT INCLUDE BASEFLOWS IF ANY.

ROUTE CHN(20001)
IN= 2---> OUT= 1

Routing time step (min)'= 5.00

<------ DATA FOR SECTION (1.1) ------>

Distance	Elevation	Manning	
0.00	0.15	0.0110	
0.01	0.00	0.0110 /0.0110	Main Channel
4.26	0.02	0.0110	Main Channel
8.51	0.00	0.0110 /0.0110	Main Channel
8.52	0.15	0.0110	

<---------- TRAVEL TIME TABLE ---------->

DEPTH (m)	ELEV (m)	VOLUME (cu.m.)	FLOW RATE (cms)	VELOCITY (m/s)	TRAV.TIME (min)
0.01	0.01	.254E+00	0.0	0.16	2.12
0.02	0.02	.102E+01	0.0	0.25	1.33
0.02	0.02	.226E+01	0.0	0.36	0.95
0.03	0.03	.363E+01	0.1	0.49	0.70
0.04	0.04	.500E+01	0.1	0.60	0.56
0.05	0.05	.637E+01	0.2	0.71	0.48
0.06	0.06	.774E+01	0.3	0.81	0.42
0.06	0.06	.911E+01	0.4	0.90	0.38
0.07	0.07	.105E+02	0.5	0.99	0.34
0.08	0.08	.119E+02	0.6	1.07	0.32
0.09	0.09	.132E+02	0.7	1.15	0.29
0.09	0.09	.146E+02	0.9	1.23	0.28
0.10	0.10	.160E+02	1.0	1.31	0.26
0.11	0.11	.173E+02	1.2	1.38	0.25
0.12	0.12	.187E+02	1.3	1.45	0.23
0.13	0.13	.201E+02	1.5	1.52	0.22
0.13	0.13	.215E+02	1.7	1.59	0.21

0.14	0.14	.228E+02	1.9	1.66	0.20
0.15	0.15	.242E+02	2.0	1.73	0.20

**** WARNING: TRAVEL TIME TABLE EXCEEDED

		<---- hydrograph ---->			<-pipe / channel->	
	AREA (ha)	QPEAK (cms)	TPEAK (hrs)	R.V. (mm)	MAX DEPTH (m)	MAX VEL (m/s)
INFLOW : ID= 2 (0013)	98.43	5.67	9.33	55.80	0.15	1.72
OUTFLOW: ID= 1 (20001)	98.43	5.69	9.33	55.80	0.15	1.73

CALIB	
STANDHYD (2000)	Area (ha)= 0.04
ID= 1 DT= 5.0 min	Total Imp(%)= 90.00 Dir. Conn.(%)= 89.00

		IMPERVIOUS	PERVIOUS (i)
Surface Area	(ha)=	0.04	0.00
Dep. Storage	(mm)=	1.00	1.50
Average Slope	(%)=	1.00	2.00
Length	(m)=	16.33	40.00
Mannings n	=	0.013	0.250

NOTE: RAINFALL WAS TRANSFORMED TO 5.0 MIN. TIME STEP.

---- TRANSFORMED HYETOGRAPH ----

TIME hrs	RAIN mm/hr	TIME hrs	RAIN mm/hr	TIME hrs	RAIN mm/hr	TIME hrs	RAIN mm/hr
0.083	0.52	6.083	1.53	12.083	2.53	18.08	0.83
0.167	0.52	6.167	1.53	12.167	2.53	18.17	0.83
0.250	0.53	6.250	1.63	12.250	2.39	18.25	0.82
0.333	0.53	6.333	1.63	12.333	2.39	18.33	0.82
0.417	0.54	6.417	1.73	12.417	2.26	18.42	0.80
0.500	0.54	6.500	1.73	12.500	2.26	18.50	0.80
0.583	0.55	6.583	1.85	12.583	2.15	18.58	0.79
0.667	0.55	6.667	1.85	12.667	2.15	18.67	0.79
0.750	0.56	6.750	2.00	12.750	2.04	18.75	0.77
0.833	0.56	6.833	2.00	12.833	2.04	18.83	0.77
0.917	0.57	6.917	2.16	12.917	1.95	18.92	0.76
1.000	0.57	7.000	2.16	13.000	1.95	19.00	0.76
1.083	0.58	7.083	2.35	13.083	1.87	19.08	0.75
1.167	0.58	7.167	2.35	13.167	1.87	19.17	0.75
1.250	0.60	7.250	2.59	13.250	1.79	19.25	0.74
1.333	0.60	7.333	2.59	13.333	1.79	19.33	0.74
1.417	0.61	7.417	2.87	13.417	1.72	19.42	0.73
1.500	0.61	7.500	2.87	13.500	1.72	19.50	0.73
1.583	0.62	7.583	3.23	13.583	1.65	19.58	0.72
1.667	0.62	7.667	3.23	13.667	1.65	19.67	0.72
1.750	0.63	7.750	3.69	13.750	1.59	19.75	0.71
1.833	0.63	7.833	3.69	13.833	1.59	19.83	0.71
1.917	0.65	7.917	4.30	13.917	1.54	19.92	0.69
2.000	0.65	8.000	4.30	14.000	1.54	20.00	0.69
2.083	0.66	8.083	5.16	14.083	1.48	20.08	0.68
2.167	0.66	8.167	5.16	14.167	1.48	20.17	0.68
2.250	0.68	8.250	6.42	14.250	1.44	20.25	0.68
2.333	0.68	8.333	6.42	14.333	1.44	20.33	0.68
2.417	0.70	8.417	8.44	14.417	1.39	20.42	0.67
2.500	0.70	8.500	8.44	14.500	1.39	20.50	0.67
2.583	0.71	8.583	12.12	14.583	1.35	20.58	0.66
2.667	0.71	8.667	12.12	14.667	1.35	20.67	0.66
2.750	0.73	8.750	20.49	14.750	1.31	20.75	0.65

2.833	0.73	8.833	20.49	14.833	1.31	20.83	0.65
2.917	0.75	8.917	51.45	14.917	1.27	20.92	0.64
3.000	0.75	9.000	51.45	15.000	1.27	21.00	0.64
3.083	0.77	9.083	157.29	15.083	1.24	21.08	0.63
3.167	0.77	9.167	157.29	15.167	1.24	21.17	0.63
3.250	0.79	9.250	62.45	15.250	1.20	21.25	0.62
3.333	0.79	9.333	62.45	15.333	1.20	21.33	0.62
3.417	0.81	9.417	31.10	15.417	1.17	21.42	0.61
3.500	0.81	9.500	31.10	15.500	1.17	21.50	0.61
3.583	0.84	9.583	19.70	15.583	1.14	21.58	0.61
3.667	0.84	9.667	19.70	15.667	1.14	21.67	0.61
3.750	0.86	9.750	14.09	15.750	1.11	21.75	0.60
3.833	0.86	9.833	14.09	15.833	1.11	21.83	0.60
3.917	0.89	9.917	10.83	15.917	1.09	21.92	0.59
4.000	0.89	10.000	10.83	16.000	1.09	22.00	0.59
4.083	0.92	10.083	8.74	16.083	1.06	22.08	0.58
4.167	0.92	10.167	8.74	16.167	1.06	22.17	0.58
4.250	0.95	10.250	7.30	16.250	1.04	22.25	0.58
4.333	0.95	10.333	7.30	16.333	1.04	22.33	0.58
4.417	0.98	10.417	6.25	16.417	1.01	22.42	0.57
4.500	0.98	10.500	6.25	16.500	1.01	22.50	0.57
4.583	1.02	10.583	5.46	16.583	0.99	22.58	0.56
4.667	1.02	10.667	5.46	16.667	0.99	22.67	0.56
4.750	1.06	10.750	4.84	16.750	0.97	22.75	0.56
4.833	1.06	10.833	4.84	16.833	0.97	22.83	0.56
4.917	1.10	10.917	4.35	16.917	0.95	22.92	0.55
5.000	1.10	11.000	4.35	17.000	0.95	23.00	0.55
5.083	1.15	11.083	3.94	17.083	0.93	23.08	0.55
5.167	1.15	11.167	3.94	17.167	0.93	23.17	0.55
5.250	1.20	11.250	3.61	17.250	0.91	23.25	0.54
5.333	1.20	11.333	3.61	17.333	0.91	23.33	0.54
5.417	1.25	11.417	3.32	17.417	0.89	23.42	0.53
5.500	1.25	11.500	3.32	17.500	0.89	23.50	0.53
5.583	1.31	11.583	3.08	17.583	0.88	23.58	0.53
5.667	1.31	11.667	3.08	17.667	0.88	23.67	0.53
5.750	1.38	11.750	2.87	17.750	0.86	23.75	0.52
5.833	1.38	11.833	2.87	17.833	0.86	23.83	0.52
5.917	1.45	11.917	2.69	17.917	0.85	23.92	0.52
6.000	1.45	12.000	2.69	18.000	0.85	24.00	0.52

Max.Eff.Inten.(mm/hr)=	157.29	172.41	
over (min)	5.00	5.00	
Storage Coeff. (min)=	0.72 (ii)	3.17 (ii)	
Unit Hyd. Tpeak (min)=	5.00	5.00	
Unit Hyd. peak (cms)=	0.34	0.27	
			TOTALS
PEAK FLOW (cms)=	0.02	0.00	0.017 (iii)
TIME TO PEAK (hrs)=	9.17	9.17	9.17
RUNOFF VOLUME (mm)=	97.20	94.56	92.44
TOTAL RAINFALL (mm)=	98.20	98.20	98.20
RUNOFF COEFFICIENT =	0.99	0.96	0.94

***** WARNING: STORAGE COEFF. IS SMALLER THAN TIME STEP!

(i) CN PROCEDURE SELECTED FOR PERVIOUS LOSSES:
CN* = 99.0 Ia = Dep. Storage (Above)
(ii) TIME STEP (DT) SHOULD BE SMALLER OR EQUAL
THAN THE STORAGE COEFFICIENT.
(iii) PEAK FLOW DOES NOT INCLUDE BASEFLOW IF ANY.

| ADD HYD (20000)|

1 + 2 = 3	AREA (ha)	QPEAK (cms)	TPEAK (hrs)	R.V. (mm)
ID1= 1 (2000):	0.04	0.017	9.17	92.44
+ ID2= 2 (20001):	98.43	5.691	9.33	55.80
ID = 3 (20000):	98.47	5.698	9.33	55.81

NOTE: PEAK FLOWS DO NOT INCLUDE BASEFLOWS IF ANY.

CALIB STANDHYD (1902) ID= 1 DT= 5.0 min	Area (ha)= 3.51	Total Imp(%)= 55.00	Dir. Conn.(%)= 34.00

		IMPERVIOUS	PERVIOUS (i)
Surface Area	(ha)=	1.93	1.58
Dep. Storage	(mm)=	1.00	1.50
Average Slope	(%)=	1.00	2.00
Length	(m)=	152.97	40.00
Mannings n	=	0.013	0.250

NOTE: RAINFALL WAS TRANSFORMED TO 5.0 MIN. TIME STEP.

---- TRANSFORMED HYETOGRAPH ----

TIME hrs	RAIN mm/hr	TIME hrs	RAIN mm/hr	TIME hrs	RAIN mm/hr	TIME hrs	RAIN mm/hr
0.083	0.52	6.083	1.53	12.083	2.53	18.08	0.83
0.167	0.52	6.167	1.53	12.167	2.53	18.17	0.83
0.250	0.53	6.250	1.63	12.250	2.39	18.25	0.82
0.333	0.53	6.333	1.63	12.333	2.39	18.33	0.82
0.417	0.54	6.417	1.73	12.417	2.26	18.42	0.80
0.500	0.54	6.500	1.73	12.500	2.26	18.50	0.80
0.583	0.55	6.583	1.85	12.583	2.15	18.58	0.79
0.667	0.55	6.667	1.85	12.667	2.15	18.67	0.79
0.750	0.56	6.750	2.00	12.750	2.04	18.75	0.77
0.833	0.56	6.833	2.00	12.833	2.04	18.83	0.77
0.917	0.57	6.917	2.16	12.917	1.95	18.92	0.76
1.000	0.57	7.000	2.16	13.000	1.95	19.00	0.76
1.083	0.58	7.083	2.35	13.083	1.87	19.08	0.75
1.167	0.58	7.167	2.35	13.167	1.87	19.17	0.75
1.250	0.60	7.250	2.59	13.250	1.79	19.25	0.74
1.333	0.60	7.333	2.59	13.333	1.79	19.33	0.74
1.417	0.61	7.417	2.87	13.417	1.72	19.42	0.73
1.500	0.61	7.500	2.87	13.500	1.72	19.50	0.73
1.583	0.62	7.583	3.23	13.583	1.65	19.58	0.72
1.667	0.62	7.667	3.23	13.667	1.65	19.67	0.72
1.750	0.63	7.750	3.69	13.750	1.59	19.75	0.71
1.833	0.63	7.833	3.69	13.833	1.59	19.83	0.71
1.917	0.65	7.917	4.30	13.917	1.54	19.92	0.69
2.000	0.65	8.000	4.30	14.000	1.54	20.00	0.69
2.083	0.66	8.083	5.16	14.083	1.48	20.08	0.68
2.167	0.66	8.167	5.16	14.167	1.48	20.17	0.68
2.250	0.68	8.250	6.42	14.250	1.44	20.25	0.68
2.333	0.68	8.333	6.42	14.333	1.44	20.33	0.68
2.417	0.70	8.417	8.44	14.417	1.39	20.42	0.67
2.500	0.70	8.500	8.44	14.500	1.39	20.50	0.67
2.583	0.71	8.583	12.12	14.583	1.35	20.58	0.66
2.667	0.71	8.667	12.12	14.667	1.35	20.67	0.66
2.750	0.73	8.750	20.49	14.750	1.31	20.75	0.65
2.833	0.73	8.833	20.49	14.833	1.31	20.83	0.65
2.917	0.75	8.917	51.45	14.917	1.27	20.92	0.64
3.000	0.75	9.000	51.45	15.000	1.27	21.00	0.64
3.083	0.77	9.083	157.29	15.083	1.24	21.08	0.63

3.167	0.77	9.167	157.29	15.167	1.24	21.17	0.63
3.250	0.79	9.250	62.45	15.250	1.20	21.25	0.62
3.333	0.79	9.333	62.45	15.333	1.20	21.33	0.62
3.417	0.81	9.417	31.10	15.417	1.17	21.42	0.61
3.500	0.81	9.500	31.10	15.500	1.17	21.50	0.61
3.583	0.84	9.583	19.70	15.583	1.14	21.58	0.61
3.667	0.84	9.667	19.70	15.667	1.14	21.67	0.61
3.750	0.86	9.750	14.09	15.750	1.11	21.75	0.60
3.833	0.86	9.833	14.09	15.833	1.11	21.83	0.60
3.917	0.89	9.917	10.83	15.917	1.09	21.92	0.59
4.000	0.89	10.000	10.83	16.000	1.09	22.00	0.59
4.083	0.92	10.083	8.74	16.083	1.06	22.08	0.58
4.167	0.92	10.167	8.74	16.167	1.06	22.17	0.58
4.250	0.95	10.250	7.30	16.250	1.04	22.25	0.58
4.333	0.95	10.333	7.30	16.333	1.04	22.33	0.58
4.417	0.98	10.417	6.25	16.417	1.01	22.42	0.57
4.500	0.98	10.500	6.25	16.500	1.01	22.50	0.57
4.583	1.02	10.583	5.46	16.583	0.99	22.58	0.56
4.667	1.02	10.667	5.46	16.667	0.99	22.67	0.56
4.750	1.06	10.750	4.84	16.750	0.97	22.75	0.56
4.833	1.06	10.833	4.84	16.833	0.97	22.83	0.56
4.917	1.10	10.917	4.35	16.917	0.95	22.92	0.55
5.000	1.10	11.000	4.35	17.000	0.95	23.00	0.55
5.083	1.15	11.083	3.94	17.083	0.93	23.08	0.55
5.167	1.15	11.167	3.94	17.167	0.93	23.17	0.55
5.250	1.20	11.250	3.61	17.250	0.91	23.25	0.54
5.333	1.20	11.333	3.61	17.333	0.91	23.33	0.54
5.417	1.25	11.417	3.32	17.417	0.89	23.42	0.53
5.500	1.25	11.500	3.32	17.500	0.89	23.50	0.53
5.583	1.31	11.583	3.08	17.583	0.88	23.58	0.53
5.667	1.31	11.667	3.08	17.667	0.88	23.67	0.53
5.750	1.38	11.750	2.87	17.750	0.86	23.75	0.52
5.833	1.38	11.833	2.87	17.833	0.86	23.83	0.52
5.917	1.45	11.917	2.69	17.917	0.85	23.92	0.52
6.000	1.45	12.000	2.69	18.000	0.85	24.00	0.52

Max.Eff.Inten.(mm/hr)=	157.29	147.70	
over (min)	5.00	10.00	
Storage Coeff. (min)=	2.75 (ii)	8.79 (ii)	
Unit Hyd. Tpeak (min)=	5.00	10.00	
Unit Hyd. peak (cms)=	0.28	0.12	
			TOTALS
PEAK FLOW (cms)=	0.51	0.45	0.907 (iii)
TIME TO PEAK (hrs)=	9.17	9.25	9.17
RUNOFF VOLUME (mm)=	97.20	60.96	73.28
TOTAL RAINFALL (mm)=	98.20	98.20	98.20
RUNOFF COEFFICIENT =	0.99	0.62	0.75

***** WARNING: STORAGE COEFF. IS SMALLER THAN TIME STEP!

(i) CN PROCEDURE SELECTED FOR PERVIOUS LOSSES:
CN* = 75.0 Ia = Dep. Storage (Above)
(ii) TIME STEP (DT) SHOULD BE SMALLER OR EQUAL
THAN THE STORAGE COEFFICIENT.
(iii) PEAK FLOW DOES NOT INCLUDE BASEFLOW IF ANY.

ADD HYD (0012)				
1 + 2 = 3	AREA (ha)	QPEAK (cms)	TPEAK (hrs)	R.V. (mm)
ID1= 1 (1902):	3.51	0.907	9.17	73.28
+ ID2= 2 (20000):	98.47	5.698	9.33	55.81

```
      ==================================================
      ID = 3 (  0012):   101.98   6.301     9.25    56.42

     NOTE:  PEAK FLOWS DO NOT INCLUDE BASEFLOWS IF ANY.
-------------------------------------------------------------------------------
--------------------
| CALIB              |
| NASHYD   (  1901)|   Area    (ha)=   0.07   Curve Number   (CN)= 71.0
|ID= 1 DT= 5.0 min |   Ia      (mm)=   5.00   # of Linear Res.(N)= 3.00
--------------------   U.H. Tp(hrs)=   0.17

         NOTE:  RAINFALL WAS TRANSFORMED TO   5.0 MIN. TIME STEP.
```

---- TRANSFORMED HYETOGRAPH ----

TIME hrs	RAIN mm/hr	TIME hrs	RAIN mm/hr	TIME hrs	RAIN mm/hr	TIME hrs	RAIN mm/hr
0.083	0.52	6.083	1.53	12.083	2.53	18.08	0.83
0.167	0.52	6.167	1.53	12.167	2.53	18.17	0.83
0.250	0.53	6.250	1.63	12.250	2.39	18.25	0.82
0.333	0.53	6.333	1.63	12.333	2.39	18.33	0.82
0.417	0.54	6.417	1.73	12.417	2.26	18.42	0.80
0.500	0.54	6.500	1.73	12.500	2.26	18.50	0.80
0.583	0.55	6.583	1.85	12.583	2.15	18.58	0.79
0.667	0.55	6.667	1.85	12.667	2.15	18.67	0.79
0.750	0.56	6.750	2.00	12.750	2.04	18.75	0.77
0.833	0.56	6.833	2.00	12.833	2.04	18.83	0.77
0.917	0.57	6.917	2.16	12.917	1.95	18.92	0.76
1.000	0.57	7.000	2.16	13.000	1.95	19.00	0.76
1.083	0.58	7.083	2.35	13.083	1.87	19.08	0.75
1.167	0.58	7.167	2.35	13.167	1.87	19.17	0.75
1.250	0.60	7.250	2.59	13.250	1.79	19.25	0.74
1.333	0.60	7.333	2.59	13.333	1.79	19.33	0.74
1.417	0.61	7.417	2.87	13.417	1.72	19.42	0.73
1.500	0.61	7.500	2.87	13.500	1.72	19.50	0.73
1.583	0.62	7.583	3.23	13.583	1.65	19.58	0.72
1.667	0.62	7.667	3.23	13.667	1.65	19.67	0.72
1.750	0.63	7.750	3.69	13.750	1.59	19.75	0.71
1.833	0.63	7.833	3.69	13.833	1.59	19.83	0.71
1.917	0.65	7.917	4.30	13.917	1.54	19.92	0.69
2.000	0.65	8.000	4.30	14.000	1.54	20.00	0.69
2.083	0.66	8.083	5.16	14.083	1.48	20.08	0.68
2.167	0.66	8.167	5.16	14.167	1.48	20.17	0.68
2.250	0.68	8.250	6.42	14.250	1.44	20.25	0.68
2.333	0.68	8.333	6.42	14.333	1.44	20.33	0.68
2.417	0.70	8.417	8.44	14.417	1.39	20.42	0.67
2.500	0.70	8.500	8.44	14.500	1.39	20.50	0.67
2.583	0.71	8.583	12.12	14.583	1.35	20.58	0.66
2.667	0.71	8.667	12.12	14.667	1.35	20.67	0.66
2.750	0.73	8.750	20.49	14.750	1.31	20.75	0.65
2.833	0.73	8.833	20.49	14.833	1.31	20.83	0.65
2.917	0.75	8.917	51.45	14.917	1.27	20.92	0.64
3.000	0.75	9.000	51.45	15.000	1.27	21.00	0.64
3.083	0.77	9.083	157.29	15.083	1.24	21.08	0.63
3.167	0.77	9.167	157.29	15.167	1.24	21.17	0.63
3.250	0.79	9.250	62.45	15.250	1.20	21.25	0.62
3.333	0.79	9.333	62.45	15.333	1.20	21.33	0.62
3.417	0.81	9.417	31.10	15.417	1.17	21.42	0.61
3.500	0.81	9.500	31.10	15.500	1.17	21.50	0.61
3.583	0.84	9.583	19.70	15.583	1.14	21.58	0.61
3.667	0.84	9.667	19.70	15.667	1.14	21.67	0.61
3.750	0.86	9.750	14.09	15.750	1.11	21.75	0.60
3.833	0.86	9.833	14.09	15.833	1.11	21.83	0.60
3.917	0.89	9.917	10.83	15.917	1.09	21.92	0.59

4.000	0.89	10.000	10.83	16.000	1.09	22.00	0.59
4.083	0.92	10.083	8.74	16.083	1.06	22.08	0.58
4.167	0.92	10.167	8.74	16.167	1.06	22.17	0.58
4.250	0.95	10.250	7.30	16.250	1.04	22.25	0.58
4.333	0.95	10.333	7.30	16.333	1.04	22.33	0.58
4.417	0.98	10.417	6.25	16.417	1.01	22.42	0.57
4.500	0.98	10.500	6.25	16.500	1.01	22.50	0.57
4.583	1.02	10.583	5.46	16.583	0.99	22.58	0.56
4.667	1.02	10.667	5.46	16.667	0.99	22.67	0.56
4.750	1.06	10.750	4.84	16.750	0.97	22.75	0.56
4.833	1.06	10.833	4.84	16.833	0.97	22.83	0.56
4.917	1.10	10.917	4.35	16.917	0.95	22.92	0.55
5.000	1.10	11.000	4.35	17.000	0.95	23.00	0.55
5.083	1.15	11.083	3.94	17.083	0.93	23.08	0.55
5.167	1.15	11.167	3.94	17.167	0.93	23.17	0.55
5.250	1.20	11.250	3.61	17.250	0.91	23.25	0.54
5.333	1.20	11.333	3.61	17.333	0.91	23.33	0.54
5.417	1.25	11.417	3.32	17.417	0.89	23.42	0.53
5.500	1.25	11.500	3.32	17.500	0.89	23.50	0.53
5.583	1.31	11.583	3.08	17.583	0.88	23.58	0.53
5.667	1.31	11.667	3.08	17.667	0.88	23.67	0.53
5.750	1.38	11.750	2.87	17.750	0.86	23.75	0.52
5.833	1.38	11.833	2.87	17.833	0.86	23.83	0.52
5.917	1.45	11.917	2.69	17.917	0.85	23.92	0.52
6.000	1.45	12.000	2.69	18.000	0.85	24.00	0.52

Unit Hyd Qpeak (cms)= 0.016

PEAK FLOW (cms)= 0.009 (i)
TIME TO PEAK (hrs)= 9.333
RUNOFF VOLUME (mm)= 43.939
TOTAL RAINFALL (mm)= 98.197
RUNOFF COEFFICIENT = 0.447

(i) PEAK FLOW DOES NOT INCLUDE BASEFLOW IF ANY.

ADD HYD (0011)		AREA	QPEAK	TPEAK	R.V.
1 + 2 = 3		(ha)	(cms)	(hrs)	(mm)
ID1= 1 (0012):		101.98	6.301	9.25	56.42
+ ID2= 2 (1901):		0.07	0.009	9.33	43.94
ID = 3 (0011):		102.05	6.310	9.25	56.41

NOTE: PEAK FLOWS DO NOT INCLUDE BASEFLOWS IF ANY.

ROUTE CHN(19001)	
IN= 2---> OUT= 1	Routing time step (min)'= 5.00

<------ DATA FOR SECTION (1.1) ------>

Distance	Elevation	Manning	
0.00	0.15	0.0110	
0.01	0.00	0.0110 /0.0110	Main Channel
4.26	0.02	0.0110	Main Channel
8.51	0.00	0.0110 /0.0110	Main Channel
8.52	0.15	0.0110	

<---------- TRAVEL TIME TABLE ---------->

DEPTH (m)	ELEV (m)	VOLUME (cu.m.)	FLOW RATE (cms)	VELOCITY (m/s)	TRAV.TIME (min)

0.01	0.01	.303E+00	0.0	0.16	2.52
0.02	0.02	.121E+01	0.0	0.25	1.59
0.02	0.02	.270E+01	0.0	0.36	1.14
0.03	0.03	.433E+01	0.1	0.49	0.83
0.04	0.04	.596E+01	0.1	0.60	0.67
0.05	0.05	.759E+01	0.2	0.71	0.57
0.06	0.06	.922E+01	0.3	0.81	0.50
0.06	0.06	.109E+02	0.4	0.90	0.45
0.07	0.07	.125E+02	0.5	0.99	0.41
0.08	0.08	.141E+02	0.6	1.07	0.38
0.09	0.09	.158E+02	0.7	1.15	0.35
0.09	0.09	.174E+02	0.9	1.23	0.33
0.10	0.10	.190E+02	1.0	1.31	0.31
0.11	0.11	.207E+02	1.2	1.38	0.29
0.12	0.12	.223E+02	1.3	1.45	0.28
0.13	0.13	.239E+02	1.5	1.52	0.27
0.13	0.13	.256E+02	1.7	1.59	0.25
0.14	0.14	.272E+02	1.9	1.66	0.24
0.15	0.15	.288E+02	2.0	1.73	0.23

**** WARNING: TRAVEL TIME TABLE EXCEEDED

	<---- hydrograph ---->				<-pipe / channel->	
	AREA (ha)	QPEAK (cms)	TPEAK (hrs)	R.V. (mm)	MAX DEPTH (m)	MAX VEL (m/s)
INFLOW : ID= 2 (0011)	102.05	6.31	9.25	56.41	0.14	1.67
OUTFLOW: ID= 1 (19001)	102.05	6.33	9.33	56.41	0.14	1.68

CALIB STANDHYD (1900) ID= 1 DT= 5.0 min	Area (ha)= 0.05 Total Imp(%)= 89.00 Dir. Conn.(%)= 88.00

		IMPERVIOUS	PERVIOUS (i)
Surface Area	(ha)=	0.04	0.01
Dep. Storage	(mm)=	1.00	1.50
Average Slope	(%)=	1.00	2.00
Length	(m)=	18.26	40.00
Mannings n	=	0.013	0.250

NOTE: RAINFALL WAS TRANSFORMED TO 5.0 MIN. TIME STEP.

---- TRANSFORMED HYETOGRAPH ----

TIME hrs	RAIN mm/hr	TIME hrs	RAIN mm/hr	TIME hrs	RAIN mm/hr	TIME hrs	RAIN mm/hr
0.083	0.52	6.083	1.53	12.083	2.53	18.08	0.83
0.167	0.52	6.167	1.53	12.167	2.53	18.17	0.83
0.250	0.53	6.250	1.63	12.250	2.39	18.25	0.82
0.333	0.53	6.333	1.63	12.333	2.39	18.33	0.82
0.417	0.54	6.417	1.73	12.417	2.26	18.42	0.80
0.500	0.54	6.500	1.73	12.500	2.26	18.50	0.80
0.583	0.55	6.583	1.85	12.583	2.15	18.58	0.79
0.667	0.55	6.667	1.85	12.667	2.15	18.67	0.79
0.750	0.56	6.750	2.00	12.750	2.04	18.75	0.77
0.833	0.56	6.833	2.00	12.833	2.04	18.83	0.77
0.917	0.57	6.917	2.16	12.917	1.95	18.92	0.76
1.000	0.57	7.000	2.16	13.000	1.95	19.00	0.76
1.083	0.58	7.083	2.35	13.083	1.87	19.08	0.75
1.167	0.58	7.167	2.35	13.167	1.87	19.17	0.75
1.250	0.60	7.250	2.59	13.250	1.79	19.25	0.74
1.333	0.60	7.333	2.59	13.333	1.79	19.33	0.74

1.417	0.61	7.417	2.87	13.417	1.72	19.42	0.73
1.500	0.61	7.500	2.87	13.500	1.72	19.50	0.73
1.583	0.62	7.583	3.23	13.583	1.65	19.58	0.72
1.667	0.62	7.667	3.23	13.667	1.65	19.67	0.72
1.750	0.63	7.750	3.69	13.750	1.59	19.75	0.71
1.833	0.63	7.833	3.69	13.833	1.59	19.83	0.71
1.917	0.65	7.917	4.30	13.917	1.54	19.92	0.69
2.000	0.65	8.000	4.30	14.000	1.54	20.00	0.69
2.083	0.66	8.083	5.16	14.083	1.48	20.08	0.68
2.167	0.66	8.167	5.16	14.167	1.48	20.17	0.68
2.250	0.68	8.250	6.42	14.250	1.44	20.25	0.68
2.333	0.68	8.333	6.42	14.333	1.44	20.33	0.68
2.417	0.70	8.417	8.44	14.417	1.39	20.42	0.67
2.500	0.70	8.500	8.44	14.500	1.39	20.50	0.67
2.583	0.71	8.583	12.12	14.583	1.35	20.58	0.66
2.667	0.71	8.667	12.12	14.667	1.35	20.67	0.66
2.750	0.73	8.750	20.49	14.750	1.31	20.75	0.65
2.833	0.73	8.833	20.49	14.833	1.31	20.83	0.65
2.917	0.75	8.917	51.45	14.917	1.27	20.92	0.64
3.000	0.75	9.000	51.45	15.000	1.27	21.00	0.64
3.083	0.77	9.083	157.29	15.083	1.24	21.08	0.63
3.167	0.77	9.167	157.29	15.167	1.24	21.17	0.63
3.250	0.79	9.250	62.45	15.250	1.20	21.25	0.62
3.333	0.79	9.333	62.45	15.333	1.20	21.33	0.62
3.417	0.81	9.417	31.10	15.417	1.17	21.42	0.61
3.500	0.81	9.500	31.10	15.500	1.17	21.50	0.61
3.583	0.84	9.583	19.70	15.583	1.14	21.58	0.61
3.667	0.84	9.667	19.70	15.667	1.14	21.67	0.61
3.750	0.86	9.750	14.09	15.750	1.11	21.75	0.60
3.833	0.86	9.833	14.09	15.833	1.11	21.83	0.60
3.917	0.89	9.917	10.83	15.917	1.09	21.92	0.59
4.000	0.89	10.000	10.83	16.000	1.09	22.00	0.59
4.083	0.92	10.083	8.74	16.083	1.06	22.08	0.58
4.167	0.92	10.167	8.74	16.167	1.06	22.17	0.58
4.250	0.95	10.250	7.30	16.250	1.04	22.25	0.58
4.333	0.95	10.333	7.30	16.333	1.04	22.33	0.58
4.417	0.98	10.417	6.25	16.417	1.01	22.42	0.57
4.500	0.98	10.500	6.25	16.500	1.01	22.50	0.57
4.583	1.02	10.583	5.46	16.583	0.99	22.58	0.56
4.667	1.02	10.667	5.46	16.667	0.99	22.67	0.56
4.750	1.06	10.750	4.84	16.750	0.97	22.75	0.56
4.833	1.06	10.833	4.84	16.833	0.97	22.83	0.56
4.917	1.10	10.917	4.35	16.917	0.95	22.92	0.55
5.000	1.10	11.000	4.35	17.000	0.95	23.00	0.55
5.083	1.15	11.083	3.94	17.083	0.93	23.08	0.55
5.167	1.15	11.167	3.94	17.167	0.93	23.17	0.55
5.250	1.20	11.250	3.61	17.250	0.91	23.25	0.54
5.333	1.20	11.333	3.61	17.333	0.91	23.33	0.54
5.417	1.25	11.417	3.32	17.417	0.89	23.42	0.53
5.500	1.25	11.500	3.32	17.500	0.89	23.50	0.53
5.583	1.31	11.583	3.08	17.583	0.88	23.58	0.53
5.667	1.31	11.667	3.08	17.667	0.88	23.67	0.53
5.750	1.38	11.750	2.87	17.750	0.86	23.75	0.52
5.833	1.38	11.833	2.87	17.833	0.86	23.83	0.52
5.917	1.45	11.917	2.69	17.917	0.85	23.92	0.52
6.000	1.45	12.000	2.69	18.000	0.85	24.00	0.52

Max.Eff.Inten.(mm/hr)=	157.29	169.37	
over (min)	5.00	5.00	
Storage Coeff. (min)=	0.77 (ii)	3.33 (ii)	
Unit Hyd. Tpeak (min)=	5.00	5.00	
Unit Hyd. peak (cms)=	0.34	0.26	
			TOTALS
PEAK FLOW (cms)=	0.02	0.00	0.022 (iii)

```
     TIME TO PEAK    (hrs)=       9.17         9.17          9.17
     RUNOFF VOLUME    (mm)=      97.20        92.29         93.88
     TOTAL RAINFALL   (mm)=      98.20        98.20         98.20
     RUNOFF COEFFICIENT   =       0.99         0.94          0.96

***** WARNING: STORAGE COEFF. IS SMALLER THAN TIME STEP!

       (i) CN PROCEDURE SELECTED FOR PERVIOUS LOSSES:
            CN*  =  98.0    Ia = Dep. Storage  (Above)
      (ii) TIME STEP (DT) SHOULD BE SMALLER OR EQUAL
           THAN THE STORAGE COEFFICIENT.
     (iii) PEAK FLOW DOES NOT INCLUDE BASEFLOW IF ANY.

--------------------------------------------------------------------------------


--------------------
| ADD HYD  ( 19000)|
|   1 +  2 =  3    |          AREA    QPEAK    TPEAK     R.V.
--------------------          (ha)    (cms)    (hrs)     (mm)
        ID1= 1 (  1900):     0.05   0.022     9.17    93.88
      + ID2= 2 ( 19001):   102.05   6.329     9.33    56.41
        ================================================
        ID = 3 ( 19000):   102.10   6.337     9.33    56.43

     NOTE:  PEAK FLOWS DO NOT INCLUDE BASEFLOWS IF ANY.
--------------------------------------------------------------------------------
--------------------
| CALIB            |
| STANDHYD (  1802)|   Area    (ha)=   0.45
|ID= 1 DT= 5.0 min |   Total Imp(%)=  63.00   Dir. Conn.(%)=  46.00
--------------------
                            IMPERVIOUS    PERVIOUS (i)
     Surface Area     (ha)=       0.28         0.17
     Dep. Storage     (mm)=       1.00         1.50
     Average Slope     (%)=       1.00         2.00
     Length            (m)=      54.77        40.00
     Mannings n             =     0.013        0.250

         NOTE:  RAINFALL WAS TRANSFORMED TO   5.0 MIN. TIME STEP.


                        ---- TRANSFORMED HYETOGRAPH ----
  TIME    RAIN |  TIME    RAIN |'  TIME    RAIN |  TIME    RAIN
   hrs   mm/hr |   hrs   mm/hr |'   hrs   mm/hr |   hrs   mm/hr
 0.083    0.52 | 6.083    1.53 |12.083    2.53 | 18.08    0.83
 0.167    0.52 | 6.167    1.53 |12.167    2.53 | 18.17    0.83
 0.250    0.53 | 6.250    1.63 |12.250    2.39 | 18.25    0.82
 0.333    0.53 | 6.333    1.63 |12.333    2.39 | 18.33    0.82
 0.417    0.54 | 6.417    1.73 |12.417    2.26 | 18.42    0.80
 0.500    0.54 | 6.500    1.73 |12.500    2.26 | 18.50    0.80
 0.583    0.55 | 6.583    1.85 |12.583    2.15 | 18.58    0.79
 0.667    0.55 | 6.667    1.85 |12.667    2.15 | 18.67    0.79
 0.750    0.56 | 6.750    2.00 |12.750    2.04 | 18.75    0.77
 0.833    0.56 | 6.833    2.00 |12.833    2.04 | 18.83    0.77
 0.917    0.57 | 6.917    2.16 |12.917    1.95 | 18.92    0.76
 1.000    0.57 | 7.000    2.16 |13.000    1.95 | 19.00    0.76
 1.083    0.58 | 7.083    2.35 |13.083    1.87 | 19.08    0.75
 1.167    0.58 | 7.167    2.35 |13.167    1.87 | 19.17    0.75
 1.250    0.60 | 7.250    2.59 |13.250    1.79 | 19.25    0.74
 1.333    0.60 | 7.333    2.59 |13.333    1.79 | 19.33    0.74
 1.417    0.61 | 7.417    2.87 |13.417    1.72 | 19.42    0.73
 1.500    0.61 | 7.500    2.87 |13.500    1.72 | 19.50    0.73
 1.583    0.62 | 7.583    3.23 |13.583    1.65 | 19.58    0.72
 1.667    0.62 | 7.667    3.23 |13.667    1.65 | 19.67    0.72
```

1.750	0.63	7.750	3.69	13.750	1.59	19.75	0.71
1.833	0.63	7.833	3.69	13.833	1.59	19.83	0.71
1.917	0.65	7.917	4.30	13.917	1.54	19.92	0.69
2.000	0.65	8.000	4.30	14.000	1.54	20.00	0.69
2.083	0.66	8.083	5.16	14.083	1.48	20.08	0.68
2.167	0.66	8.167	5.16	14.167	1.48	20.17	0.68
2.250	0.68	8.250	6.42	14.250	1.44	20.25	0.68
2.333	0.68	8.333	6.42	14.333	1.44	20.33	0.68
2.417	0.70	8.417	8.44	14.417	1.39	20.42	0.67
2.500	0.70	8.500	8.44	14.500	1.39	20.50	0.67
2.583	0.71	8.583	12.12	14.583	1.35	20.58	0.66
2.667	0.71	8.667	12.12	14.667	1.35	20.67	0.66
2.750	0.73	8.750	20.49	14.750	1.31	20.75	0.65
2.833	0.73	8.833	20.49	14.833	1.31	20.83	0.65
2.917	0.75	8.917	51.45	14.917	1.27	20.92	0.64
3.000	0.75	9.000	51.45	15.000	1.27	21.00	0.64
3.083	0.77	9.083	157.29	15.083	1.24	21.08	0.63
3.167	0.77	9.167	157.29	15.167	1.24	21.17	0.63
3.250	0.79	9.250	62.45	15.250	1.20	21.25	0.62
3.333	0.79	9.333	62.45	15.333	1.20	21.33	0.62
3.417	0.81	9.417	31.10	15.417	1.17	21.42	0.61
3.500	0.81	9.500	31.10	15.500	1.17	21.50	0.61
3.583	0.84	9.583	19.70	15.583	1.14	21.58	0.61
3.667	0.84	9.667	19.70	15.667	1.14	21.67	0.61
3.750	0.86	9.750	14.09	15.750	1.11	21.75	0.60
3.833	0.86	9.833	14.09	15.833	1.11	21.83	0.60
3.917	0.89	9.917	10.83	15.917	1.09	21.92	0.59
4.000	0.89	10.000	10.83	16.000	1.09	22.00	0.59
4.083	0.92	10.083	8.74	16.083	1.06	22.08	0.58
4.167	0.92	10.167	8.74	16.167	1.06	22.17	0.58
4.250	0.95	10.250	7.30	16.250	1.04	22.25	0.58
4.333	0.95	10.333	7.30	16.333	1.04	22.33	0.58
4.417	0.98	10.417	6.25	16.417	1.01	22.42	0.57
4.500	0.98	10.500	6.25	16.500	1.01	22.50	0.57
4.583	1.02	10.583	5.46	16.583	0.99	22.58	0.56
4.667	1.02	10.667	5.46	16.667	0.99	22.67	0.56
4.750	1.06	10.750	4.84	16.750	0.97	22.75	0.56
4.833	1.06	10.833	4.84	16.833	0.97	22.83	0.56
4.917	1.10	10.917	4.35	16.917	0.95	22.92	0.55
5.000	1.10	11.000	4.35	17.000	0.95	23.00	0.55
5.083	1.15	11.083	3.94	17.083	0.93	23.08	0.55
5.167	1.15	11.167	3.94	17.167	0.93	23.17	0.55
5.250	1.20	11.250	3.61	17.250	0.91	23.25	0.54
5.333	1.20	11.333	3.61	17.333	0.91	23.33	0.54
5.417	1.25	11.417	3.32	17.417	0.89	23.42	0.53
5.500	1.25	11.500	3.32	17.500	0.89	23.50	0.53
5.583	1.31	11.583	3.08	17.583	0.88	23.58	0.53
5.667	1.31	11.667	3.08	17.667	0.88	23.67	0.53
5.750	1.38	11.750	2.87	17.750	0.86	23.75	0.52
5.833	1.38	11.833	2.87	17.833	0.86	23.83	0.52
5.917	1.45	11.917	2.69	17.917	0.85	23.92	0.52
6.000	1.45	12.000	2.69	18.000	0.85	24.00	0.52

Max.Eff.Inten.(mm/hr)=	157.29	161.00	
over (min)	5.00	10.00	
Storage Coeff. (min)=	1.49 (ii)	7.32 (ii)	
Unit Hyd. Tpeak (min)=	5.00	10.00	
Unit Hyd. peak (cms)=	0.33	0.13	
			TOTALS
PEAK FLOW (cms)=	0.09	0.06	0.140 (iii)
TIME TO PEAK (hrs)=	9.17	9.25	9.17
RUNOFF VOLUME (mm)=	97.20	65.83	80.25
TOTAL RAINFALL (mm)=	98.20	98.20	98.20
RUNOFF COEFFICIENT =	0.99	0.67	0.82

***** WARNING: STORAGE COEFF. IS SMALLER THAN TIME STEP!

(i) CN PROCEDURE SELECTED FOR PERVIOUS LOSSES:
CN* = 79.0 Ia = Dep. Storage (Above)
(ii) TIME STEP (DT) SHOULD BE SMALLER OR EQUAL
THAN THE STORAGE COEFFICIENT.
(iii) PEAK FLOW DOES NOT INCLUDE BASEFLOW IF ANY.

ADD HYD (0010)					
1 + 2 = 3		AREA (ha)	QPEAK (cms)	TPEAK (hrs)	R.V. (mm)
	ID1= 1 (1802):	0.45	0.140	9.17	80.25
	+ ID2= 2 (19000):	102.10	6.337	9.33	56.43
	ID = 3 (0010):	102.55	6.418	9.33	56.53

NOTE: PEAK FLOWS DO NOT INCLUDE BASEFLOWS IF ANY.

CALIB			
STANDHYD (1801)	Area (ha)= 0.13		
ID= 1 DT= 5.0 min	Total Imp(%)= 84.00	Dir. Conn.(%)= 83.00	

		IMPERVIOUS	PERVIOUS (i)
Surface Area	(ha)=	0.11	0.02
Dep. Storage	(mm)=	1.00	1.50
Average Slope	(%)=	1.00	2.00
Length	(m)=	29.44	40.00
Mannings n	=	0.013	0.250

NOTE: RAINFALL WAS TRANSFORMED TO 5.0 MIN. TIME STEP.

---- TRANSFORMED HYETOGRAPH ----

TIME hrs	RAIN mm/hr	TIME hrs	RAIN mm/hr	TIME hrs	RAIN mm/hr	TIME hrs	RAIN mm/hr
0.083	0.52	6.083	1.53	12.083	2.53	18.08	0.83
0.167	0.52	6.167	1.53	12.167	2.53	18.17	0.83
0.250	0.53	6.250	1.63	12.250	2.39	18.25	0.82
0.333	0.53	6.333	1.63	12.333	2.39	18.33	0.82
0.417	0.54	6.417	1.73	12.417	2.26	18.42	0.80
0.500	0.54	6.500	1.73	12.500	2.26	18.50	0.80
0.583	0.55	6.583	1.85	12.583	2.15	18.58	0.79
0.667	0.55	6.667	1.85	12.667	2.15	18.67	0.79
0.750	0.56	6.750	2.00	12.750	2.04	18.75	0.77
0.833	0.56	6.833	2.00	12.833	2.04	18.83	0.77
0.917	0.57	6.917	2.16	12.917	1.95	18.92	0.76
1.000	0.57	7.000	2.16	13.000	1.95	19.00	0.76
1.083	0.58	7.083	2.35	13.083	1.87	19.08	0.75
1.167	0.58	7.167	2.35	13.167	1.87	19.17	0.75
1.250	0.60	7.250	2.59	13.250	1.79	19.25	0.74
1.333	0.60	7.333	2.59	13.333	1.79	19.33	0.74
1.417	0.61	7.417	2.87	13.417	1.72	19.42	0.73
1.500	0.61	7.500	2.87	13.500	1.72	19.50	0.73
1.583	0.62	7.583	3.23	13.583	1.65	19.58	0.72
1.667	0.62	7.667	3.23	13.667	1.65	19.67	0.72
1.750	0.63	7.750	3.69	13.750	1.59	19.75	0.71
1.833	0.63	7.833	3.69	13.833	1.59	19.83	0.71
1.917	0.65	7.917	4.30	13.917	1.54	19.92	0.69
2.000	0.65	8.000	4.30	14.000	1.54	20.00	0.69

2.083	0.66	8.083	5.16	14.083	1.48	20.08	0.68
2.167	0.66	8.167	5.16	14.167	1.48	20.17	0.68
2.250	0.68	8.250	6.42	14.250	1.44	20.25	0.68
2.333	0.68	8.333	6.42	14.333	1.44	20.33	0.68
2.417	0.70	8.417	8.44	14.417	1.39	20.42	0.67
2.500	0.70	8.500	8.44	14.500	1.39	20.50	0.67
2.583	0.71	8.583	12.12	14.583	1.35	20.58	0.66
2.667	0.71	8.667	12.12	14.667	1.35	20.67	0.66
2.750	0.73	8.750	20.49	14.750	1.31	20.75	0.65
2.833	0.73	8.833	20.49	14.833	1.31	20.83	0.65
2.917	0.75	8.917	51.45	14.917	1.27	20.92	0.64
3.000	0.75	9.000	51.45	15.000	1.27	21.00	0.64
3.083	0.77	9.083	157.29	15.083	1.24	21.08	0.63
3.167	0.77	9.167	157.29	15.167	1.24	21.17	0.63
3.250	0.79	9.250	62.45	15.250	1.20	21.25	0.62
3.333	0.79	9.333	62.45	15.333	1.20	21.33	0.62
3.417	0.81	9.417	31.10	15.417	1.17	21.42	0.61
3.500	0.81	9.500	31.10	15.500	1.17	21.50	0.61
3.583	0.84	9.583	19.70	15.583	1.14	21.58	0.61
3.667	0.84	9.667	19.70	15.667	1.14	21.67	0.61
3.750	0.86	9.750	14.09	15.750	1.11	21.75	0.60
3.833	0.86	9.833	14.09	15.833	1.11	21.83	0.60
3.917	0.89	9.917	10.83	15.917	1.09	21.92	0.59
4.000	0.89	10.000	10.83	16.000	1.09	22.00	0.59
4.083	0.92	10.083	8.74	16.083	1.06	22.08	0.58
4.167	0.92	10.167	8.74	16.167	1.06	22.17	0.58
4.250	0.95	10.250	7.30	16.250	1.04	22.25	0.58
4.333	0.95	10.333	7.30	16.333	1.04	22.33	0.58
4.417	0.98	10.417	6.25	16.417	1.01	22.42	0.57
4.500	0.98	10.500	6.25	16.500	1.01	22.50	0.57
4.583	1.02	10.583	5.46	16.583	0.99	22.58	0.56
4.667	1.02	10.667	5.46	16.667	0.99	22.67	0.56
4.750	1.06	10.750	4.84	16.750	0.97	22.75	0.56
4.833	1.06	10.833	4.84	16.833	0.97	22.83	0.56
4.917	1.10	10.917	4.35	16.917	0.95	22.92	0.55
5.000	1.10	11.000	4.35	17.000	0.95	23.00	0.55
5.083	1.15	11.083	3.94	17.083	0.93	23.08	0.55
5.167	1.15	11.167	3.94	17.167	0.93	23.17	0.55
5.250	1.20	11.250	3.61	17.250	0.91	23.25	0.54
5.333	1.20	11.333	3.61	17.333	0.91	23.33	0.54
5.417	1.25	11.417	3.32	17.417	0.89	23.42	0.53
5.500	1.25	11.500	3.32	17.500	0.89	23.50	0.53
5.583	1.31	11.583	3.08	17.583	0.88	23.58	0.53
5.667	1.31	11.667	3.08	17.667	0.88	23.67	0.53
5.750	1.38	11.750	2.87	17.750	0.86	23.75	0.52
5.833	1.38	11.833	2.87	17.833	0.86	23.83	0.52
5.917	1.45	11.917	2.69	17.917	0.85	23.92	0.52
6.000	1.45	12.000	2.69	18.000	0.85	24.00	0.52

Max.Eff.Inten.(mm/hr)=	157.29	138.56	
over (min)	5.00	5.00	
Storage Coeff. (min)=	1.02 (ii)	4.07 (ii)	
Unit Hyd. Tpeak (min)=	5.00	5.00	
Unit Hyd. peak (cms)=	0.34	0.24	
			TOTALS
PEAK FLOW (cms)=	0.05	0.01	0.055 (iii)
TIME TO PEAK (hrs)=	9.17	9.17	9.17
RUNOFF VOLUME (mm)=	97.20	75.94	93.58
TOTAL RAINFALL (mm)=	98.20	98.20	98.20
RUNOFF COEFFICIENT =	0.99	0.77	0.95

***** WARNING: STORAGE COEFF. IS SMALLER THAN TIME STEP!

(i) CN PROCEDURE SELECTED FOR PERVIOUS LOSSES:

```
          CN*  =  90.0    Ia = Dep. Storage  (Above)
     (ii) TIME STEP (DT) SHOULD BE SMALLER OR EQUAL
          THAN THE STORAGE COEFFICIENT.
    (iii) PEAK FLOW DOES NOT INCLUDE BASEFLOW IF ANY.

--------------------------------------------------------------------------------

--------------------
| ADD HYD  (  0009)|
|   1 +  2 =  3    |          AREA    QPEAK    TPEAK     R.V.
--------------------          (ha)    (cms)    (hrs)     (mm)
       ID1= 1 (  0010):   102.55   6.418     9.33    56.53
     + ID2= 2 (  1801):     0.13   0.055     9.17    93.58
       ==========================================================
       ID = 3 (  0009):   102.68   6.441     9.33    56.58

    NOTE:  PEAK FLOWS DO NOT INCLUDE BASEFLOWS IF ANY.
--------------------------------------------------------------------------------
--------------------
| ROUTE CHN( 18001)|
| IN= 2---> OUT= 1 |     Routing time step (min)'=  5.00
--------------------
              <------ DATA FOR SECTION (   1.1) ------>
              Distance      Elevation       Manning
                  0.00          0.15         0.0110
                  0.01          0.00    0.0110 /0.0110  Main Channel
                  4.26          0.02         0.0110      Main Channel
                  8.51          0.00    0.0110 /0.0110  Main Channel
                  8.52          0.15         0.0110

     <---------------------- TRAVEL TIME TABLE ---------------------->
      DEPTH    ELEV      VOLUME    FLOW RATE    VELOCITY   TRAV.TIME
       (m)      (m)     (cu.m.)      (cms)        (m/s)      (min)
      0.01     0.01    .893E+00       0.0          0.16       7.43
      0.02     0.02    .357E+01       0.0          0.25       4.68
      0.02     0.02    .795E+01       0.0          0.36       3.35
      0.03     0.03    .128E+02       0.1          0.49       2.44
      0.04     0.04    .176E+02       0.1          0.60       1.97
      0.05     0.05    .224E+02       0.2          0.71       1.68
      0.06     0.06    .272E+02       0.3          0.81       1.48
      0.06     0.06    .320E+02       0.4          0.90       1.32
      0.07     0.07    .368E+02       0.5          0.99       1.21
      0.08     0.08    .416E+02       0.6          1.07       1.11
      0.09     0.09    .464E+02       0.7          1.15       1.03
      0.09     0.09    .512E+02       0.9          1.23       0.97
      0.10     0.10    .560E+02       1.0          1.31       0.91
      0.11     0.11    .609E+02       1.2          1.38       0.86
      0.12     0.12    .657E+02       1.3          1.45       0.82
      0.13     0.13    .705E+02       1.5          1.52       0.78
      0.13     0.13    .753E+02       1.7          1.59       0.75
      0.14     0.14    .801E+02       1.9          1.66       0.72
      0.15     0.15    .849E+02       2.0          1.73       0.69

    **** WARNING:  TRAVEL TIME TABLE EXCEEDED
                                    <---- hydrograph ---->   <-pipe / channel->
                              AREA    QPEAK   TPEAK   R.V.   MAX DEPTH  MAX VEL
                              (ha)    (cms)   (hrs)   (mm)      (m)      (m/s)
  INFLOW : ID= 2 (  0009)  102.68     6.44    9.33  56.58      0.14      1.68
  OUTFLOW: ID= 1 ( 18001)  102.68     6.46    9.33  56.58      0.15      1.71



--------------------------------------------------------------------------------
--------------------
```

CALIB	
STANDHYD (1800)	Area (ha)= 0.14
ID= 1 DT= 5.0 min	Total Imp(%)= 89.00 Dir. Conn.(%)= 89.00

		IMPERVIOUS	PERVIOUS (i)
Surface Area	(ha)=	0.12	0.02
Dep. Storage	(mm)=	1.00	1.50
Average Slope	(%)=	1.00	2.00
Length	(m)=	30.55	40.00
Mannings n	=	0.013	0.250

NOTE: RAINFALL WAS TRANSFORMED TO 5.0 MIN. TIME STEP.

---- TRANSFORMED HYETOGRAPH ----

TIME hrs	RAIN mm/hr	TIME hrs	RAIN mm/hr	TIME hrs	RAIN mm/hr	TIME hrs	RAIN mm/hr
0.083	0.52	6.083	1.53	12.083	2.53	18.08	0.83
0.167	0.52	6.167	1.53	12.167	2.53	18.17	0.83
0.250	0.53	6.250	1.63	12.250	2.39	18.25	0.82
0.333	0.53	6.333	1.63	12.333	2.39	18.33	0.82
0.417	0.54	6.417	1.73	12.417	2.26	18.42	0.80
0.500	0.54	6.500	1.73	12.500	2.26	18.50	0.80
0.583	0.55	6.583	1.85	12.583	2.15	18.58	0.79
0.667	0.55	6.667	1.85	12.667	2.15	18.67	0.79
0.750	0.56	6.750	2.00	12.750	2.04	18.75	0.77
0.833	0.56	6.833	2.00	12.833	2.04	18.83	0.77
0.917	0.57	6.917	2.16	12.917	1.95	18.92	0.76
1.000	0.57	7.000	2.16	13.000	1.95	19.00	0.76
1.083	0.58	7.083	2.35	13.083	1.87	19.08	0.75
1.167	0.58	7.167	2.35	13.167	1.87	19.17	0.75
1.250	0.60	7.250	2.59	13.250	1.79	19.25	0.74
1.333	0.60	7.333	2.59	13.333	1.79	19.33	0.74
1.417	0.61	7.417	2.87	13.417	1.72	19.42	0.73
1.500	0.61	7.500	2.87	13.500	1.72	19.50	0.73
1.583	0.62	7.583	3.23	13.583	1.65	19.58	0.72
1.667	0.62	7.667	3.23	13.667	1.65	19.67	0.72
1.750	0.63	7.750	3.69	13.750	1.59	19.75	0.71
1.833	0.63	7.833	3.69	13.833	1.59	19.83	0.71
1.917	0.65	7.917	4.30	13.917	1.54	19.92	0.69
2.000	0.65	8.000	4.30	14.000	1.54	20.00	0.69
2.083	0.66	8.083	5.16	14.083	1.48	20.08	0.68
2.167	0.66	8.167	5.16	14.167	1.48	20.17	0.68
2.250	0.68	8.250	6.42	14.250	1.44	20.25	0.68
2.333	0.68	8.333	6.42	14.333	1.44	20.33	0.68
2.417	0.70	8.417	8.44	14.417	1.39	20.42	0.67
2.500	0.70	8.500	8.44	14.500	1.39	20.50	0.67
2.583	0.71	8.583	12.12	14.583	1.35	20.58	0.66
2.667	0.71	8.667	12.12	14.667	1.35	20.67	0.66
2.750	0.73	8.750	20.49	14.750	1.31	20.75	0.65
2.833	0.73	8.833	20.49	14.833	1.31	20.83	0.65
2.917	0.75	8.917	51.45	14.917	1.27	20.92	0.64
3.000	0.75	9.000	51.45	15.000	1.27	21.00	0.64
3.083	0.77	9.083	157.29	15.083	1.24	21.08	0.63
3.167	0.77	9.167	157.29	15.167	1.24	21.17	0.63
3.250	0.79	9.250	62.45	15.250	1.20	21.25	0.62
3.333	0.79	9.333	62.45	15.333	1.20	21.33	0.62
3.417	0.81	9.417	31.10	15.417	1.17	21.42	0.61
3.500	0.81	9.500	31.10	15.500	1.17	21.50	0.61
3.583	0.84	9.583	19.70	15.583	1.14	21.58	0.61
3.667	0.84	9.667	19.70	15.667	1.14	21.67	0.61
3.750	0.86	9.750	14.09	15.750	1.11	21.75	0.60
3.833	0.86	9.833	14.09	15.833	1.11	21.83	0.60
3.917	0.89	9.917	10.83	15.917	1.09	21.92	0.59

4.000	0.89	10.000	10.83	16.000	1.09	22.00	0.59
4.083	0.92	10.083	8.74	16.083	1.06	22.08	0.58
4.167	0.92	10.167	8.74	16.167	1.06	22.17	0.58
4.250	0.95	10.250	7.30	16.250	1.04	22.25	0.58
4.333	0.95	10.333	7.30	16.333	1.04	22.33	0.58
4.417	0.98	10.417	6.25	16.417	1.01	22.42	0.57
4.500	0.98	10.500	6.25	16.500	1.01	22.50	0.57
4.583	1.02	10.583	5.46	16.583	0.99	22.58	0.56
4.667	1.02	10.667	5.46	16.667	0.99	22.67	0.56
4.750	1.06	10.750	4.84	16.750	0.97	22.75	0.56
4.833	1.06	10.833	4.84	16.833	0.97	22.83	0.56
4.917	1.10	10.917	4.35	16.917	0.95	22.92	0.55
5.000	1.10	11.000	4.35	17.000	0.95	23.00	0.55
5.083	1.15	11.083	3.94	17.083	0.93	23.08	0.55
5.167	1.15	11.167	3.94	17.167	0.93	23.17	0.55
5.250	1.20	11.250	3.61	17.250	0.91	23.25	0.54
5.333	1.20	11.333	3.61	17.333	0.91	23.33	0.54
5.417	1.25	11.417	3.32	17.417	0.89	23.42	0.53
5.500	1.25	11.500	3.32	17.500	0.89	23.50	0.53
5.583	1.31	11.583	3.08	17.583	0.88	23.58	0.53
5.667	1.31	11.667	3.08	17.667	0.88	23.67	0.53
5.750	1.38	11.750	2.87	17.750	0.86	23.75	0.52
5.833	1.38	11.833	2.87	17.833	0.86	23.83	0.52
5.917	1.45	11.917	2.69	17.917	0.85	23.92	0.52
6.000	1.45	12.000	2.69	18.000	0.85	24.00	0.52

			TOTALS
Max.Eff.Inten.(mm/hr)=	157.29	154.91	
over (min)	5.00	5.00	
Storage Coeff. (min)=	1.05 (ii)	3.60 (ii)	
Unit Hyd. Tpeak (min)=	5.00	5.00	
Unit Hyd. peak (cms)=	0.34	0.26	
PEAK FLOW (cms)=	0.05	0.01	0.061 (iii)
TIME TO PEAK (hrs)=	9.17	9.17	9.17
RUNOFF VOLUME (mm)=	97.20	91.78	96.60
TOTAL RAINFALL (mm)=	98.20	98.20	98.20
RUNOFF COEFFICIENT =	0.99	0.93	0.98

***** WARNING: STORAGE COEFF. IS SMALLER THAN TIME STEP!

(i) CN PROCEDURE SELECTED FOR PERVIOUS LOSSES:
CN* = 98.0 Ia = Dep. Storage (Above)
(ii) TIME STEP (DT) SHOULD BE SMALLER OR EQUAL
THAN THE STORAGE COEFFICIENT.
(iii) PEAK FLOW DOES NOT INCLUDE BASEFLOW IF ANY.

ADD HYD (18000)		AREA	QPEAK	TPEAK	R.V.
1 + 2 = 3		(ha)	(cms)	(hrs)	(mm)
ID1= 1 (1800):		0.14	0.061	9.17	96.60
+ ID2= 2 (18001):		102.68	6.464	9.33	56.58
ID = 3 (18000):		102.82	6.489	9.33	56.63

NOTE: PEAK FLOWS DO NOT INCLUDE BASEFLOWS IF ANY.

CALIB STANDHYD (1702) ID= 1 DT= 5.0 min				
Area (ha)=	0.07			
Total Imp(%)=	83.00	Dir. Conn.(%)=	80.00	

		IMPERVIOUS	PERVIOUS (i)
Surface Area	(ha)=	0.06	0.01
Dep. Storage	(mm)=	1.00	1.50
Average Slope	(%)=	1.00	2.00
Length	(m)=	21.60	40.00
Mannings n	=	0.013	0.250

NOTE: RAINFALL WAS TRANSFORMED TO 5.0 MIN. TIME STEP.

---- TRANSFORMED HYETOGRAPH ----

TIME hrs	RAIN mm/hr	TIME hrs	RAIN mm/hr	TIME hrs	RAIN mm/hr	TIME hrs	RAIN mm/hr
0.083	0.52	6.083	1.53	12.083	2.53	18.08	0.83
0.167	0.52	6.167	1.53	12.167	2.53	18.17	0.83
0.250	0.53	6.250	1.63	12.250	2.39	18.25	0.82
0.333	0.53	6.333	1.63	12.333	2.39	18.33	0.82
0.417	0.54	6.417	1.73	12.417	2.26	18.42	0.80
0.500	0.54	6.500	1.73	12.500	2.26	18.50	0.80
0.583	0.55	6.583	1.85	12.583	2.15	18.58	0.79
0.667	0.55	6.667	1.85	12.667	2.15	18.67	0.79
0.750	0.56	6.750	2.00	12.750	2.04	18.75	0.77
0.833	0.56	6.833	2.00	12.833	2.04	18.83	0.77
0.917	0.57	6.917	2.16	12.917	1.95	18.92	0.76
1.000	0.57	7.000	2.16	13.000	1.95	19.00	0.76
1.083	0.58	7.083	2.35	13.083	1.87	19.08	0.75
1.167	0.58	7.167	2.35	13.167	1.87	19.17	0.75
1.250	0.60	7.250	2.59	13.250	1.79	19.25	0.74
1.333	0.60	7.333	2.59	13.333	1.79	19.33	0.74
1.417	0.61	7.417	2.87	13.417	1.72	19.42	0.73
1.500	0.61	7.500	2.87	13.500	1.72	19.50	0.73
1.583	0.62	7.583	3.23	13.583	1.65	19.58	0.72
1.667	0.62	7.667	3.23	13.667	1.65	19.67	0.72
1.750	0.63	7.750	3.69	13.750	1.59	19.75	0.71
1.833	0.63	7.833	3.69	13.833	1.59	19.83	0.71
1.917	0.65	7.917	4.30	13.917	1.54	19.92	0.69
2.000	0.65	8.000	4.30	14.000	1.54	20.00	0.69
2.083	0.66	8.083	5.16	14.083	1.48	20.08	0.68
2.167	0.66	8.167	5.16	14.167	1.48	20.17	0.68
2.250	0.68	8.250	6.42	14.250	1.44	20.25	0.68
2.333	0.68	8.333	6.42	14.333	1.44	20.33	0.68
2.417	0.70	8.417	8.44	14.417	1.39	20.42	0.67
2.500	0.70	8.500	8.44	14.500	1.39	20.50	0.67
2.583	0.71	8.583	12.12	14.583	1.35	20.58	0.66
2.667	0.71	8.667	12.12	14.667	1.35	20.67	0.66
2.750	0.73	8.750	20.49	14.750	1.31	20.75	0.65
2.833	0.73	8.833	20.49	14.833	1.31	20.83	0.65
2.917	0.75	8.917	51.45	14.917	1.27	20.92	0.64
3.000	0.75	9.000	51.45	15.000	1.27	21.00	0.64
3.083	0.77	9.083	157.29	15.083	1.24	21.08	0.63
3.167	0.77	9.167	157.29	15.167	1.24	21.17	0.63
3.250	0.79	9.250	62.45	15.250	1.20	21.25	0.62
3.333	0.79	9.333	62.45	15.333	1.20	21.33	0.62
3.417	0.81	9.417	31.10	15.417	1.17	21.42	0.61
3.500	0.81	9.500	31.10	15.500	1.17	21.50	0.61
3.583	0.84	9.583	19.70	15.583	1.14	21.58	0.61
3.667	0.84	9.667	19.70	15.667	1.14	21.67	0.61
3.750	0.86	9.750	14.09	15.750	1.11	21.75	0.60
3.833	0.86	9.833	14.09	15.833	1.11	21.83	0.60
3.917	0.89	9.917	10.83	15.917	1.09	21.92	0.59
4.000	0.89	10.000	10.83	16.000	1.09	22.00	0.59
4.083	0.92	10.083	8.74	16.083	1.06	22.08	0.58
4.167	0.92	10.167	8.74	16.167	1.06	22.17	0.58
4.250	0.95	10.250	7.30	16.250	1.04	22.25	0.58

4.333	0.95	10.333	7.30	16.333	1.04	22.33	0.58
4.417	0.98	10.417	6.25	16.417	1.01	22.42	0.57
4.500	0.98	10.500	6.25	16.500	1.01	22.50	0.57
4.583	1.02	10.583	5.46	16.583	0.99	22.58	0.56
4.667	1.02	10.667	5.46	16.667	0.99	22.67	0.56
4.750	1.06	10.750	4.84	16.750	0.97	22.75	0.56
4.833	1.06	10.833	4.84	16.833	0.97	22.83	0.56
4.917	1.10	10.917	4.35	16.917	0.95	22.92	0.55
5.000	1.10	11.000	4.35	17.000	0.95	23.00	0.55
5.083	1.15	11.083	3.94	17.083	0.93	23.08	0.55
5.167	1.15	11.167	3.94	17.167	0.93	23.17	0.55
5.250	1.20	11.250	3.61	17.250	0.91	23.25	0.54
5.333	1.20	11.333	3.61	17.333	0.91	23.33	0.54
5.417	1.25	11.417	3.32	17.417	0.89	23.42	0.53
5.500	1.25	11.500	3.32	17.500	0.89	23.50	0.53
5.583	1.31	11.583	3.08	17.583	0.88	23.58	0.53
5.667	1.31	11.667	3.08	17.667	0.88	23.67	0.53
5.750	1.38	11.750	2.87	17.750	0.86	23.75	0.52
5.833	1.38	11.833	2.87	17.833	0.86	23.83	0.52
5.917	1.45	11.917	2.69	17.917	0.85	23.92	0.52
6.000	1.45	12.000	2.69	18.000	0.85	24.00	0.52

			TOTALS
Max.Eff.Inten.(mm/hr)=	157.29	157.13	
over (min)	5.00	5.00	
Storage Coeff. (min)=	0.85 (ii)	4.02 (ii)	
Unit Hyd. Tpeak (min)=	5.00	5.00	
Unit Hyd. peak (cms)=	0.34	0.24	
PEAK FLOW (cms)=	0.02	0.00	0.029 (iii)
TIME TO PEAK (hrs)=	9.17	9.17	9.17
RUNOFF VOLUME (mm)=	97.20	77.69	93.21
TOTAL RAINFALL (mm)=	98.20	98.20	98.20
RUNOFF COEFFICIENT =	0.99	0.79	0.95

***** WARNING: STORAGE COEFF. IS SMALLER THAN TIME STEP!

(i) CN PROCEDURE SELECTED FOR PERVIOUS LOSSES:
CN* = 90.0 Ia = Dep. Storage (Above)
(ii) TIME STEP (DT) SHOULD BE SMALLER OR EQUAL
THAN THE STORAGE COEFFICIENT.
(iii) PEAK FLOW DOES NOT INCLUDE BASEFLOW IF ANY.

ADD HYD (0008)		AREA	QPEAK	TPEAK	R.V.
		(ha)	(cms)	(hrs)	(mm)
ID1= 1 (1702):		0.07	0.029	9.17	93.21
+ ID2= 2 (18000):		102.82	6.489	9.33	56.63
ID = 3 (0008):		102.89	6.501	9.33	56.66

NOTE: PEAK FLOWS DO NOT INCLUDE BASEFLOWS IF ANY.

CALIB STANDHYD (1701)	Area (ha)= 0.38	
ID= 1 DT= 5.0 min	Total Imp(%)= 51.00	Dir. Conn.(%)= 27.00

	IMPERVIOUS	PERVIOUS (i)
Surface Area (ha)=	0.19	0.19
Dep. Storage (mm)=	1.00	1.50
Average Slope (%)=	1.00	2.00

Length	(m)=	50.33	40.00
Mannings n	=	0.013	0.250

NOTE: RAINFALL WAS TRANSFORMED TO 5.0 MIN. TIME STEP.

---- TRANSFORMED HYETOGRAPH ----

TIME hrs	RAIN mm/hr	TIME hrs	RAIN mm/hr	TIME hrs	RAIN mm/hr	TIME hrs	RAIN mm/hr
0.083	0.52	6.083	1.53	12.083	2.53	18.08	0.83
0.167	0.52	6.167	1.53	12.167	2.53	18.17	0.83
0.250	0.53	6.250	1.63	12.250	2.39	18.25	0.82
0.333	0.53	6.333	1.63	12.333	2.39	18.33	0.82
0.417	0.54	6.417	1.73	12.417	2.26	18.42	0.80
0.500	0.54	6.500	1.73	12.500	2.26	18.50	0.80
0.583	0.55	6.583	1.85	12.583	2.15	18.58	0.79
0.667	0.55	6.667	1.85	12.667	2.15	18.67	0.79
0.750	0.56	6.750	2.00	12.750	2.04	18.75	0.77
0.833	0.56	6.833	2.00	12.833	2.04	18.83	0.77
0.917	0.57	6.917	2.16	12.917	1.95	18.92	0.76
1.000	0.57	7.000	2.16	13.000	1.95	19.00	0.76
1.083	0.58	7.083	2.35	13.083	1.87	19.08	0.75
1.167	0.58	7.167	2.35	13.167	1.87	19.17	0.75
1.250	0.60	7.250	2.59	13.250	1.79	19.25	0.74
1.333	0.60	7.333	2.59	13.333	1.79	19.33	0.74
1.417	0.61	7.417	2.87	13.417	1.72	19.42	0.73
1.500	0.61	7.500	2.87	13.500	1.72	19.50	0.73
1.583	0.62	7.583	3.23	13.583	1.65	19.58	0.72
1.667	0.62	7.667	3.23	13.667	1.65	19.67	0.72
1.750	0.63	7.750	3.69	13.750	1.59	19.75	0.71
1.833	0.63	7.833	3.69	13.833	1.59	19.83	0.71
1.917	0.65	7.917	4.30	13.917	1.54	19.92	0.69
2.000	0.65	8.000	4.30	14.000	1.54	20.00	0.69
2.083	0.66	8.083	5.16	14.083	1.48	20.08	0.68
2.167	0.66	8.167	5.16	14.167	1.48	20.17	0.68
2.250	0.68	8.250	6.42	14.250	1.44	20.25	0.68
2.333	0.68	8.333	6.42	14.333	1.44	20.33	0.68
2.417	0.70	8.417	8.44	14.417	1.39	20.42	0.67
2.500	0.70	8.500	8.44	14.500	1.39	20.50	0.67
2.583	0.71	8.583	12.12	14.583	1.35	20.58	0.66
2.667	0.71	8.667	12.12	14.667	1.35	20.67	0.66
2.750	0.73	8.750	20.49	14.750	1.31	20.75	0.65
2.833	0.73	8.833	20.49	14.833	1.31	20.83	0.65
2.917	0.75	8.917	51.45	14.917	1.27	20.92	0.64
3.000	0.75	9.000	51.45	15.000	1.27	21.00	0.64
3.083	0.77	9.083	157.29	15.083	1.24	21.08	0.63
3.167	0.77	9.167	157.29	15.167	1.24	21.17	0.63
3.250	0.79	9.250	62.45	15.250	1.20	21.25	0.62
3.333	0.79	9.333	62.45	15.333	1.20	21.33	0.62
3.417	0.81	9.417	31.10	15.417	1.17	21.42	0.61
3.500	0.81	9.500	31.10	15.500	1.17	21.50	0.61
3.583	0.84	9.583	19.70	15.583	1.14	21.58	0.61
3.667	0.84	9.667	19.70	15.667	1.14	21.67	0.61
3.750	0.86	9.750	14.09	15.750	1.11	21.75	0.60
3.833	0.86	9.833	14.09	15.833	1.11	21.83	0.60
3.917	0.89	9.917	10.83	15.917	1.09	21.92	0.59
4.000	0.89	10.000	10.83	16.000	1.09	22.00	0.59
4.083	0.92	10.083	8.74	16.083	1.06	22.08	0.58
4.167	0.92	10.167	8.74	16.167	1.06	22.17	0.58
4.250	0.95	10.250	7.30	16.250	1.04	22.25	0.58
4.333	0.95	10.333	7.30	16.333	1.04	22.33	0.58
4.417	0.98	10.417	6.25	16.417	1.01	22.42	0.57
4.500	0.98	10.500	6.25	16.500	1.01	22.50	0.57
4.583	1.02	10.583	5.46	16.583	0.99	22.58	0.56

4.667	1.02	10.667	5.46	16.667	0.99	22.67	0.56
4.750	1.06	10.750	4.84	16.750	0.97	22.75	0.56
4.833	1.06	10.833	4.84	16.833	0.97	22.83	0.56
4.917	1.10	10.917	4.35	16.917	0.95	22.92	0.55
5.000	1.10	11.000	4.35	17.000	0.95	23.00	0.55
5.083	1.15	11.083	3.94	17.083	0.93	23.08	0.55
5.167	1.15	11.167	3.94	17.167	0.93	23.17	0.55
5.250	1.20	11.250	3.61	17.250	0.91	23.25	0.54
5.333	1.20	11.333	3.61	17.333	0.91	23.33	0.54
5.417	1.25	11.417	3.32	17.417	0.89	23.42	0.53
5.500	1.25	11.500	3.32	17.500	0.89	23.50	0.53
5.583	1.31	11.583	3.08	17.583	0.88	23.58	0.53
5.667	1.31	11.667	3.08	17.667	0.88	23.67	0.53
5.750	1.38	11.750	2.87	17.750	0.86	23.75	0.52
5.833	1.38	11.833	2.87	17.833	0.86	23.83	0.52
5.917	1.45	11.917	2.69	17.917	0.85	23.92	0.52
6.000	1.45	12.000	2.69	18.000	0.85	24.00	0.52

Max.Eff.Inten.(mm/hr)=	157.29	140.73	
over (min)	5.00	10.00	
Storage Coeff. (min)=	1.41 (ii)	7.57 (ii)	
Unit Hyd. Tpeak (min)=	5.00	10.00	
Unit Hyd. peak (cms)=	0.33	0.13	
			TOTALS
PEAK FLOW (cms)=	0.04	0.05	0.092 (iii)
TIME TO PEAK (hrs)=	9.17	9.25	9.17
RUNOFF VOLUME (mm)=	97.20	57.77	68.41
TOTAL RAINFALL (mm)=	98.20	98.20	98.20
RUNOFF COEFFICIENT =	0.99	0.59	0.70

***** WARNING: STORAGE COEFF. IS SMALLER THAN TIME STEP!

(i) CN PROCEDURE SELECTED FOR PERVIOUS LOSSES:
CN* = 72.0 Ia = Dep. Storage (Above)
(ii) TIME STEP (DT) SHOULD BE SMALLER OR EQUAL
THAN THE STORAGE COEFFICIENT.
(iii) PEAK FLOW DOES NOT INCLUDE BASEFLOW IF ANY.

ADD HYD (0007)		AREA	QPEAK	TPEAK	R.V.
		(ha)	(cms)	(hrs)	(mm)
1 + 2 = 3	ID1= 1 (1701):	0.38	0.092	9.17	68.41
	+ ID2= 2 (0008):	102.89	6.501	9.33	56.66
	ID = 3 (0007):	103.27	6.563	9.33	56.70

NOTE: PEAK FLOWS DO NOT INCLUDE BASEFLOWS IF ANY.

ROUTE CHN(17001)	
IN= 2---> OUT= 1	Routing time step (min)'= 5.00

<------ DATA FOR SECTION (1.1) ------>

Distance	Elevation	Manning	
0.00	0.15	0.0110	
0.01	0.00	0.0110 /0.0110	Main Channel
4.26	0.02	0.0110	Main Channel
8.51	0.00	0.0110 /0.0110	Main Channel
8.52	0.15	0.0110	

<---------- TRAVEL TIME TABLE ---------->

DEPTH (m)	ELEV (m)	VOLUME (cu.m.)	FLOW RATE (cms)	VELOCITY (m/s)	TRAV.TIME (min)
0.01	0.01	.464E+00	0.0	0.16	3.86
0.02	0.02	.185E+01	0.0	0.25	2.43
0.02	0.02	.413E+01	0.0	0.36	1.74
0.03	0.03	.663E+01	0.1	0.49	1.27
0.04	0.04	.912E+01	0.1	0.60	1.03
0.05	0.05	.116E+02	0.2	0.71	0.87
0.06	0.06	.141E+02	0.3	0.81	0.77
0.06	0.06	.166E+02	0.4	0.90	0.69
0.07	0.07	.191E+02	0.5	0.99	0.63
0.08	0.08	.216E+02	0.6	1.07	0.58
0.09	0.09	.241E+02	0.7	1.15	0.54
0.09	0.09	.266E+02	0.9	1.23	0.50
0.10	0.10	.291E+02	1.0	1.31	0.47
0.11	0.11	.316E+02	1.2	1.38	0.45
0.12	0.12	.341E+02	1.3	1.45	0.43
0.13	0.13	.366E+02	1.5	1.52	0.41
0.13	0.13	.391E+02	1.7	1.59	0.39
0.14	0.14	.416E+02	1.9	1.66	0.37
0.15	0.15	.441E+02	2.0	1.73	0.36

**** WARNING: TRAVEL TIME TABLE EXCEEDED

		<---- hydrograph ---->			<-pipe / channel->	
	AREA (ha)	QPEAK (cms)	TPEAK (hrs)	R.V. (mm)	MAX DEPTH (m)	MAX VEL (m/s)
INFLOW : ID= 2 (0007)	103.27	6.56	9.33	56.70	0.15	1.71
OUTFLOW: ID= 1 (17001)	103.27	6.57	9.33	56.70	0.15	1.73

CALIB STANDHYD (1700) ID= 1 DT= 5.0 min	Area (ha)= 0.12 Total Imp(%)= 85.00 Dir. Conn.(%)= 81.00

		IMPERVIOUS	PERVIOUS (i)
Surface Area	(ha)=	0.10	0.02
Dep. Storage	(mm)=	1.00	1.50
Average Slope	(%)=	1.00	2.00
Length	(m)=	28.28	40.00
Mannings n	=	0.013	0.250

NOTE: RAINFALL WAS TRANSFORMED TO 5.0 MIN. TIME STEP.

---- TRANSFORMED HYETOGRAPH ----

TIME hrs	RAIN mm/hr	TIME hrs	RAIN mm/hr	TIME hrs	RAIN mm/hr	TIME hrs	RAIN mm/hr
0.083	0.52	6.083	1.53	12.083	2.53	18.08	0.83
0.167	0.52	6.167	1.53	12.167	2.53	18.17	0.83
0.250	0.53	6.250	1.63	12.250	2.39	18.25	0.82
0.333	0.53	6.333	1.63	12.333	2.39	18.33	0.82
0.417	0.54	6.417	1.73	12.417	2.26	18.42	0.80
0.500	0.54	6.500	1.73	12.500	2.26	18.50	0.80
0.583	0.55	6.583	1.85	12.583	2.15	18.58	0.79
0.667	0.55	6.667	1.85	12.667	2.15	18.67	0.79
0.750	0.56	6.750	2.00	12.750	2.04	18.75	0.77
0.833	0.56	6.833	2.00	12.833	2.04	18.83	0.77
0.917	0.57	6.917	2.16	12.917	1.95	18.92	0.76
1.000	0.57	7.000	2.16	13.000	1.95	19.00	0.76
1.083	0.58	7.083	2.35	13.083	1.87	19.08	0.75
1.167	0.58	7.167	2.35	13.167	1.87	19.17	0.75

1.250	0.60	7.250	2.59	13.250	1.79	19.25	0.74
1.333	0.60	7.333	2.59	13.333	1.79	19.33	0.74
1.417	0.61	7.417	2.87	13.417	1.72	19.42	0.73
1.500	0.61	7.500	2.87	13.500	1.72	19.50	0.73
1.583	0.62	7.583	3.23	13.583	1.65	19.58	0.72
1.667	0.62	7.667	3.23	13.667	1.65	19.67	0.72
1.750	0.63	7.750	3.69	13.750	1.59	19.75	0.71
1.833	0.63	7.833	3.69	13.833	1.59	19.83	0.71
1.917	0.65	7.917	4.30	13.917	1.54	19.92	0.69
2.000	0.65	8.000	4.30	14.000	1.54	20.00	0.69
2.083	0.66	8.083	5.16	14.083	1.48	20.08	0.68
2.167	0.66	8.167	5.16	14.167	1.48	20.17	0.68
2.250	0.68	8.250	6.42	14.250	1.44	20.25	0.68
2.333	0.68	8.333	6.42	14.333	1.44	20.33	0.68
2.417	0.70	8.417	8.44	14.417	1.39	20.42	0.67
2.500	0.70	8.500	8.44	14.500	1.39	20.50	0.67
2.583	0.71	8.583	12.12	14.583	1.35	20.58	0.66
2.667	0.71	8.667	12.12	14.667	1.35	20.67	0.66
2.750	0.73	8.750	20.49	14.750	1.31	20.75	0.65
2.833	0.73	8.833	20.49	14.833	1.31	20.83	0.65
2.917	0.75	8.917	51.45	14.917	1.27	20.92	0.64
3.000	0.75	9.000	51.45	15.000	1.27	21.00	0.64
3.083	0.77	9.083	157.29	15.083	1.24	21.08	0.63
3.167	0.77	9.167	157.29	15.167	1.24	21.17	0.63
3.250	0.79	9.250	62.45	15.250	1.20	21.25	0.62
3.333	0.79	9.333	62.45	15.333	1.20	21.33	0.62
3.417	0.81	9.417	31.10	15.417	1.17	21.42	0.61
3.500	0.81	9.500	31.10	15.500	1.17	21.50	0.61
3.583	0.84	9.583	19.70	15.583	1.14	21.58	0.61
3.667	0.84	9.667	19.70	15.667	1.14	21.67	0.61
3.750	0.86	9.750	14.09	15.750	1.11	21.75	0.60
3.833	0.86	9.833	14.09	15.833	1.11	21.83	0.60
3.917	0.89	9.917	10.83	15.917	1.09	21.92	0.59
4.000	0.89	10.000	10.83	16.000	1.09	22.00	0.59
4.083	0.92	10.083	8.74	16.083	1.06	22.08	0.58
4.167	0.92	10.167	8.74	16.167	1.06	22.17	0.58
4.250	0.95	10.250	7.30	16.250	1.04	22.25	0.58
4.333	0.95	10.333	7.30	16.333	1.04	22.33	0.58
4.417	0.98	10.417	6.25	16.417	1.01	22.42	0.57
4.500	0.98	10.500	6.25	16.500	1.01	22.50	0.57
4.583	1.02	10.583	5.46	16.583	0.99	22.58	0.56
4.667	1.02	10.667	5.46	16.667	0.99	22.67	0.56
4.750	1.06	10.750	4.84	16.750	0.97	22.75	0.56
4.833	1.06	10.833	4.84	16.833	0.97	22.83	0.56
4.917	1.10	10.917	4.35	16.917	0.95	22.92	0.55
5.000	1.10	11.000	4.35	17.000	0.95	23.00	0.55
5.083	1.15	11.083	3.94	17.083	0.93	23.08	0.55
5.167	1.15	11.167	3.94	17.167	0.93	23.17	0.55
5.250	1.20	11.250	3.61	17.250	0.91	23.25	0.54
5.333	1.20	11.333	3.61	17.333	0.91	23.33	0.54
5.417	1.25	11.417	3.32	17.417	0.89	23.42	0.53
5.500	1.25	11.500	3.32	17.500	0.89	23.50	0.53
5.583	1.31	11.583	3.08	17.583	0.88	23.58	0.53
5.667	1.31	11.667	3.08	17.667	0.88	23.67	0.53
5.750	1.38	11.750	2.87	17.750	0.86	23.75	0.52
5.833	1.38	11.833	2.87	17.833	0.86	23.83	0.52
5.917	1.45	11.917	2.69	17.917	0.85	23.92	0.52
6.000	1.45	12.000	2.69	18.000	0.85	24.00	0.52

Max.Eff.Inten.(mm/hr)=	157.29	186.37
over (min)	5.00	5.00
Storage Coeff. (min)=	1.00 (ii)	4.00 (ii)
Unit Hyd. Tpeak (min)=	5.00	5.00
Unit Hyd. peak (cms)=	0.34	0.24

			TOTALS
PEAK FLOW (cms)=	0.04	0.01	0.051 (iii)
TIME TO PEAK (hrs)=	9.17	9.17	9.17
RUNOFF VOLUME (mm)=	97.20	85.70	95.01
TOTAL RAINFALL (mm)=	98.20	98.20	98.20
RUNOFF COEFFICIENT =	0.99	0.87	0.97

***** WARNING: STORAGE COEFF. IS SMALLER THAN TIME STEP!

(i) CN PROCEDURE SELECTED FOR PERVIOUS LOSSES:
CN* = 94.0 Ia = Dep. Storage (Above)
(ii) TIME STEP (DT) SHOULD BE SMALLER OR EQUAL
THAN THE STORAGE COEFFICIENT.
(iii) PEAK FLOW DOES NOT INCLUDE BASEFLOW IF ANY.

ADD HYD (17000)		AREA (ha)	QPEAK (cms)	TPEAK (hrs)	R.V. (mm)
1 + 2 = 3	ID1= 1 (1700):	0.12	0.051	9.17	95.01
	+ ID2= 2 (17001):	103.27	6.575	9.33	56.70
	ID = 3 (17000):	103.39	6.596	9.33	56.74

NOTE: PEAK FLOWS DO NOT INCLUDE BASEFLOWS IF ANY.

CALIB STANDHYD (1601)	Area (ha)= 0.26		
ID= 1 DT= 5.0 min	Total Imp(%)= 75.00	Dir. Conn.(%)= 56.00	

		IMPERVIOUS	PERVIOUS (i)
Surface Area	(ha)=	0.19	0.06
Dep. Storage	(mm)=	1.00	1.50
Average Slope	(%)=	1.00	2.00
Length	(m)=	41.63	40.00
Mannings n	=	0.013	0.250

NOTE: RAINFALL WAS TRANSFORMED TO 5.0 MIN. TIME STEP.

---- TRANSFORMED HYETOGRAPH ----

TIME hrs	RAIN mm/hr	TIME hrs	RAIN mm/hr	TIME hrs	RAIN mm/hr	TIME hrs	RAIN mm/hr
0.083	0.52	6.083	1.53	12.083	2.53	18.08	0.83
0.167	0.52	6.167	1.53	12.167	2.53	18.17	0.83
0.250	0.53	6.250	1.63	12.250	2.39	18.25	0.82
0.333	0.53	6.333	1.63	12.333	2.39	18.33	0.82
0.417	0.54	6.417	1.73	12.417	2.26	18.42	0.80
0.500	0.54	6.500	1.73	12.500	2.26	18.50	0.80
0.583	0.55	6.583	1.85	12.583	2.15	18.58	0.79
0.667	0.55	6.667	1.85	12.667	2.15	18.67	0.79
0.750	0.56	6.750	2.00	12.750	2.04	18.75	0.77
0.833	0.56	6.833	2.00	12.833	2.04	18.83	0.77
0.917	0.57	6.917	2.16	12.917	1.95	18.92	0.76
1.000	0.57	7.000	2.16	13.000	1.95	19.00	0.76
1.083	0.58	7.083	2.35	13.083	1.87	19.08	0.75
1.167	0.58	7.167	2.35	13.167	1.87	19.17	0.75
1.250	0.60	7.250	2.59	13.250	1.79	19.25	0.74
1.333	0.60	7.333	2.59	13.333	1.79	19.33	0.74
1.417	0.61	7.417	2.87	13.417	1.72	19.42	0.73
1.500	0.61	7.500	2.87	13.500	1.72	19.50	0.73

1.583	0.62	7.583	3.23	13.583	1.65	19.58	0.72
1.667	0.62	7.667	3.23	13.667	1.65	19.67	0.72
1.750	0.63	7.750	3.69	13.750	1.59	19.75	0.71
1.833	0.63	7.833	3.69	13.833	1.59	19.83	0.71
1.917	0.65	7.917	4.30	13.917	1.54	19.92	0.69
2.000	0.65	8.000	4.30	14.000	1.54	20.00	0.69
2.083	0.66	8.083	5.16	14.083	1.48	20.08	0.68
2.167	0.66	8.167	5.16	14.167	1.48	20.17	0.68
2.250	0.68	8.250	6.42	14.250	1.44	20.25	0.68
2.333	0.68	8.333	6.42	14.333	1.44	20.33	0.68
2.417	0.70	8.417	8.44	14.417	1.39	20.42	0.67
2.500	0.70	8.500	8.44	14.500	1.39	20.50	0.67
2.583	0.71	8.583	12.12	14.583	1.35	20.58	0.66
2.667	0.71	8.667	12.12	14.667	1.35	20.67	0.66
2.750	0.73	8.750	20.49	14.750	1.31	20.75	0.65
2.833	0.73	8.833	20.49	14.833	1.31	20.83	0.65
2.917	0.75	8.917	51.45	14.917	1.27	20.92	0.64
3.000	0.75	9.000	51.45	15.000	1.27	21.00	0.64
3.083	0.77	9.083	157.29	15.083	1.24	21.08	0.63
3.167	0.77	9.167	157.29	15.167	1.24	21.17	0.63
3.250	0.79	9.250	62.45	15.250	1.20	21.25	0.62
3.333	0.79	9.333	62.45	15.333	1.20	21.33	0.62
3.417	0.81	9.417	31.10	15.417	1.17	21.42	0.61
3.500	0.81	9.500	31.10	15.500	1.17	21.50	0.61
3.583	0.84	9.583	19.70	15.583	1.14	21.58	0.61
3.667	0.84	9.667	19.70	15.667	1.14	21.67	0.61
3.750	0.86	9.750	14.09	15.750	1.11	21.75	0.60
3.833	0.86	9.833	14.09	15.833	1.11	21.83	0.60
3.917	0.89	9.917	10.83	15.917	1.09	21.92	0.59
4.000	0.89	10.000	10.83	16.000	1.09	22.00	0.59
4.083	0.92	10.083	8.74	16.083	1.06	22.08	0.58
4.167	0.92	10.167	8.74	16.167	1.06	22.17	0.58
4.250	0.95	10.250	7.30	16.250	1.04	22.25	0.58
4.333	0.95	10.333	7.30	16.333	1.04	22.33	0.58
4.417	0.98	10.417	6.25	16.417	1.01	22.42	0.57
4.500	0.98	10.500	6.25	16.500	1.01	22.50	0.57
4.583	1.02	10.583	5.46	16.583	0.99	22.58	0.56
4.667	1.02	10.667	5.46	16.667	0.99	22.67	0.56
4.750	1.06	10.750	4.84	16.750	0.97	22.75	0.56
4.833	1.06	10.833	4.84	16.833	0.97	22.83	0.56
4.917	1.10	10.917	4.35	16.917	0.95	22.92	0.55
5.000	1.10	11.000	4.35	17.000	0.95	23.00	0.55
5.083	1.15	11.083	3.94	17.083	0.93	23.08	0.55
5.167	1.15	11.167	3.94	17.167	0.93	23.17	0.55
5.250	1.20	11.250	3.61	17.250	0.91	23.25	0.54
5.333	1.20	11.333	3.61	17.333	0.91	23.33	0.54
5.417	1.25	11.417	3.32	17.417	0.89	23.42	0.53
5.500	1.25	11.500	3.32	17.500	0.89	23.50	0.53
5.583	1.31	11.583	3.08	17.583	0.88	23.58	0.53
5.667	1.31	11.667	3.08	17.667	0.88	23.67	0.53
5.750	1.38	11.750	2.87	17.750	0.86	23.75	0.52
5.833	1.38	11.833	2.87	17.833	0.86	23.83	0.52
5.917	1.45	11.917	2.69	17.917	0.85	23.92	0.52
6.000	1.45	12.000	2.69	18.000	0.85	24.00	0.52

Max.Eff.Inten.(mm/hr)=	157.29	240.73	
over (min)	5.00	10.00	
Storage Coeff. (min)=	1.26 (ii)	5.52 (ii)	
Unit Hyd. Tpeak (min)=	5.00	10.00	
Unit Hyd. peak (cms)=	0.33	0.16	
			TOTALS
PEAK FLOW (cms)=	0.06	0.03	0.097 (iii)
TIME TO PEAK (hrs)=	9.17	9.25	9.17
RUNOFF VOLUME (mm)=	97.20	79.69	89.48

```
     TOTAL RAINFALL   (mm)=      98.20        98.20          98.20
     RUNOFF COEFFICIENT   =       0.99         0.81           0.91

***** WARNING: STORAGE COEFF. IS SMALLER THAN TIME STEP!

       (i) CN PROCEDURE SELECTED FOR PERVIOUS LOSSES:
            CN*  =  87.0    Ia = Dep. Storage  (Above)
      (ii) TIME STEP (DT) SHOULD BE SMALLER OR EQUAL
           THAN THE STORAGE COEFFICIENT.
     (iii) PEAK FLOW DOES NOT INCLUDE BASEFLOW IF ANY.

--------------------------------------------------------------------------------


--------------------
| ADD HYD  (  0006)|
|   1 +  2 =  3    |          AREA    QPEAK    TPEAK     R.V.
--------------------          (ha)    (cms)    (hrs)     (mm)
        ID1= 1 (  1601):     0.26   0.097     9.17    89.48
      + ID2= 2 ( 17000):   103.39   6.596     9.33    56.74
        ==========================================================
        ID = 3 (  0006):   103.65   6.646     9.33    56.83

     NOTE:  PEAK FLOWS DO NOT INCLUDE BASEFLOWS IF ANY.
--------------------------------------------------------------------------------
--------------------
| ROUTE CHN( 16001)|
| IN= 2---> OUT= 1 |     Routing time step (min)'=  5.00
--------------------
               <------ DATA FOR SECTION (   1.1) ------>
               Distance      Elevation       Manning
                   0.00          0.15         0.0110
                   0.01          0.00    0.0110 /0.0110  Main Channel
                   4.26          0.02         0.0110      Main Channel
                   8.51          0.00    0.0110 /0.0110  Main Channel
                   8.52          0.15         0.0110

      <--------------------- TRAVEL TIME TABLE ---------------------->
       DEPTH     ELEV      VOLUME    FLOW RATE    VELOCITY   TRAV.TIME
        (m)       (m)     (cu.m.)      (cms)        (m/s)      (min)
       0.01      0.01    .539E+00       0.0          0.16       4.48
       0.02      0.02    .215E+01       0.0          0.25       2.82
       0.02      0.02    .480E+01       0.0          0.36       2.02
       0.03      0.03    .769E+01       0.1          0.49       1.47
       0.04      0.04    .106E+02       0.1          0.60       1.19
       0.05      0.05    .135E+02       0.2          0.71       1.01
       0.06      0.06    .164E+02       0.3          0.81       0.89
       0.06      0.06    .193E+02       0.4          0.90       0.80
       0.07      0.07    .222E+02       0.5          0.99       0.73
       0.08      0.08    .251E+02       0.6          1.07       0.67
       0.09      0.09    .280E+02       0.7          1.15       0.62
       0.09      0.09    .309E+02       0.9          1.23       0.58
       0.10      0.10    .338E+02       1.0          1.31       0.55
       0.11      0.11    .367E+02       1.2          1.38       0.52
       0.12      0.12    .396E+02       1.3          1.45       0.49
       0.13      0.13    .425E+02       1.5          1.52       0.47
       0.13      0.13    .454E+02       1.7          1.59       0.45
       0.14      0.14    .483E+02       1.9          1.66       0.43
       0.15      0.15    .512E+02       2.0          1.73       0.42

     **** WARNING:  TRAVEL TIME TABLE EXCEEDED
                                    <---- hydrograph ---->   <-pipe / channel->
                               AREA    QPEAK   TPEAK   R.V.   MAX DEPTH  MAX VEL
                               (ha)    (cms)   (hrs)   (mm)      (m)      (m/s)
    INFLOW : ID= 2 (  0006)  103.65     6.65    9.33  56.83      0.14      1.64
```

OUTFLOW: ID= 1 (16001) 103.65 6.66 9.33 56.83 0.14 1.66

CALIB	
STANDHYD (1600)	Area (ha)= 0.15
ID= 1 DT= 5.0 min	Total Imp(%)= 86.00 Dir. Conn.(%)= 85.00

		IMPERVIOUS	PERVIOUS (i)
Surface Area	(ha)=	0.13	0.02
Dep. Storage	(mm)=	1.00	1.50
Average Slope	(%)=	1.00	2.00
Length	(m)=	31.62	40.00
Mannings n	=	0.013	0.250

NOTE: RAINFALL WAS TRANSFORMED TO 5.0 MIN. TIME STEP.

---- TRANSFORMED HYETOGRAPH ----

TIME hrs	RAIN mm/hr	TIME hrs	RAIN mm/hr	TIME hrs	RAIN mm/hr	TIME hrs	RAIN mm/hr
0.083	0.52	6.083	1.53	12.083	2.53	18.08	0.83
0.167	0.52	6.167	1.53	12.167	2.53	18.17	0.83
0.250	0.53	6.250	1.63	12.250	2.39	18.25	0.82
0.333	0.53	6.333	1.63	12.333	2.39	18.33	0.82
0.417	0.54	6.417	1.73	12.417	2.26	18.42	0.80
0.500	0.54	6.500	1.73	12.500	2.26	18.50	0.80
0.583	0.55	6.583	1.85	12.583	2.15	18.58	0.79
0.667	0.55	6.667	1.85	12.667	2.15	18.67	0.79
0.750	0.56	6.750	2.00	12.750	2.04	18.75	0.77
0.833	0.56	6.833	2.00	12.833	2.04	18.83	0.77
0.917	0.57	6.917	2.16	12.917	1.95	18.92	0.76
1.000	0.57	7.000	2.16	13.000	1.95	19.00	0.76
1.083	0.58	7.083	2.35	13.083	1.87	19.08	0.75
1.167	0.58	7.167	2.35	13.167	1.87	19.17	0.75
1.250	0.60	7.250	2.59	13.250	1.79	19.25	0.74
1.333	0.60	7.333	2.59	13.333	1.79	19.33	0.74
1.417	0.61	7.417	2.87	13.417	1.72	19.42	0.73
1.500	0.61	7.500	2.87	13.500	1.72	19.50	0.73
1.583	0.62	7.583	3.23	13.583	1.65	19.58	0.72
1.667	0.62	7.667	3.23	13.667	1.65	19.67	0.72
1.750	0.63	7.750	3.69	13.750	1.59	19.75	0.71
1.833	0.63	7.833	3.69	13.833	1.59	19.83	0.71
1.917	0.65	7.917	4.30	13.917	1.54	19.92	0.69
2.000	0.65	8.000	4.30	14.000	1.54	20.00	0.69
2.083	0.66	8.083	5.16	14.083	1.48	20.08	0.68
2.167	0.66	8.167	5.16	14.167	1.48	20.17	0.68
2.250	0.68	8.250	6.42	14.250	1.44	20.25	0.68
2.333	0.68	8.333	6.42	14.333	1.44	20.33	0.68
2.417	0.70	8.417	8.44	14.417	1.39	20.42	0.67
2.500	0.70	8.500	8.44	14.500	1.39	20.50	0.67
2.583	0.71	8.583	12.12	14.583	1.35	20.58	0.66
2.667	0.71	8.667	12.12	14.667	1.35	20.67	0.66
2.750	0.73	8.750	20.49	14.750	1.31	20.75	0.65
2.833	0.73	8.833	20.49	14.833	1.31	20.83	0.65
2.917	0.75	8.917	51.45	14.917	1.27	20.92	0.64
3.000	0.75	9.000	51.45	15.000	1.27	21.00	0.64
3.083	0.77	9.083	157.29	15.083	1.24	21.08	0.63
3.167	0.77	9.167	157.29	15.167	1.24	21.17	0.63
3.250	0.79	9.250	62.45	15.250	1.20	21.25	0.62
3.333	0.79	9.333	62.45	15.333	1.20	21.33	0.62
3.417	0.81	9.417	31.10	15.417	1.17	21.42	0.61

3.500	0.81	9.500	31.10	15.500	1.17	21.50	0.61
3.583	0.84	9.583	19.70	15.583	1.14	21.58	0.61
3.667	0.84	9.667	19.70	15.667	1.14	21.67	0.61
3.750	0.86	9.750	14.09	15.750	1.11	21.75	0.60
3.833	0.86	9.833	14.09	15.833	1.11	21.83	0.60
3.917	0.89	9.917	10.83	15.917	1.09	21.92	0.59
4.000	0.89	10.000	10.83	16.000	1.09	22.00	0.59
4.083	0.92	10.083	8.74	16.083	1.06	22.08	0.58
4.167	0.92	10.167	8.74	16.167	1.06	22.17	0.58
4.250	0.95	10.250	7.30	16.250	1.04	22.25	0.58
4.333	0.95	10.333	7.30	16.333	1.04	22.33	0.58
4.417	0.98	10.417	6.25	16.417	1.01	22.42	0.57
4.500	0.98	10.500	6.25	16.500	1.01	22.50	0.57
4.583	1.02	10.583	5.46	16.583	0.99	22.58	0.56
4.667	1.02	10.667	5.46	16.667	0.99	22.67	0.56
4.750	1.06	10.750	4.84	16.750	0.97	22.75	0.56
4.833	1.06	10.833	4.84	16.833	0.97	22.83	0.56
4.917	1.10	10.917	4.35	16.917	0.95	22.92	0.55
5.000	1.10	11.000	4.35	17.000	0.95	23.00	0.55
5.083	1.15	11.083	3.94	17.083	0.93	23.08	0.55
5.167	1.15	11.167	3.94	17.167	0.93	23.17	0.55
5.250	1.20	11.250	3.61	17.250	0.91	23.25	0.54
5.333	1.20	11.333	3.61	17.333	0.91	23.33	0.54
5.417	1.25	11.417	3.32	17.417	0.89	23.42	0.53
5.500	1.25	11.500	3.32	17.500	0.89	23.50	0.53
5.583	1.31	11.583	3.08	17.583	0.88	23.58	0.53
5.667	1.31	11.667	3.08	17.667	0.88	23.67	0.53
5.750	1.38	11.750	2.87	17.750	0.86	23.75	0.52
5.833	1.38	11.833	2.87	17.833	0.86	23.83	0.52
5.917	1.45	11.917	2.69	17.917	0.85	23.92	0.52
6.000	1.45	12.000	2.69	18.000	0.85	24.00	0.52

Max.Eff.Inten.(mm/hr)=	157.29	154.55	
over (min)	5.00	5.00	
Storage Coeff. (min)=	1.07 (ii)	3.93 (ii)	
Unit Hyd. Tpeak (min)=	5.00	5.00	
Unit Hyd. peak (cms)=	0.34	0.24	
			TOTALS
PEAK FLOW (cms)=	0.06	0.01	0.064 (iii)
TIME TO PEAK (hrs)=	9.17	9.17	9.17
RUNOFF VOLUME (mm)=	97.20	83.71	95.17
TOTAL RAINFALL (mm)=	98.20	98.20	98.20
RUNOFF COEFFICIENT =	0.99	0.85	0.97

***** WARNING: STORAGE COEFF. IS SMALLER THAN TIME STEP!

(i) CN PROCEDURE SELECTED FOR PERVIOUS LOSSES:
CN* = 94.0 Ia = Dep. Storage (Above)
(ii) TIME STEP (DT) SHOULD BE SMALLER OR EQUAL
THAN THE STORAGE COEFFICIENT.
(iii) PEAK FLOW DOES NOT INCLUDE BASEFLOW IF ANY.

ADD HYD (16000)				
1 + 2 = 3	AREA (ha)	QPEAK (cms)	TPEAK (hrs)	R.V. (mm)
ID1= 1 (1600):	0.15	0.064	9.17	95.17
+ ID2= 2 (16001):	103.65	6.661	9.33	56.83
ID = 3 (16000):	103.80	6.687	9.33	56.88

NOTE: PEAK FLOWS DO NOT INCLUDE BASEFLOWS IF ANY.

```
--------------------------------------------------------------------------------
--------------------
| ROUTE CHN( 15001)|
| IN= 2---> OUT= 1 |     Routing time step (min)'=  5.00
--------------------
```

<------ DATA FOR SECTION (1.1) ------>

Distance	Elevation	Manning	
0.00	0.15	0.0110	
0.01	0.00	0.0110 /0.0110	Main Channel
4.26	0.02	0.0110	Main Channel
8.51	0.00	0.0110 /0.0110	Main Channel
8.52	0.15	0.0110	

<-------------------- TRAVEL TIME TABLE ---------------------->

DEPTH (m)	ELEV (m)	VOLUME (cu.m.)	FLOW RATE (cms)	VELOCITY (m/s)	TRAV.TIME (min)
0.01	0.01	.390E+00	0.0	0.16	3.25
0.02	0.02	.156E+01	0.0	0.25	2.05
0.02	0.02	.347E+01	0.0	0.36	1.46
0.03	0.03	.557E+01	0.1	0.49	1.07
0.04	0.04	.768E+01	0.1	0.60	0.86
0.05	0.05	.978E+01	0.2	0.71	0.73
0.06	0.06	.119E+02	0.3	0.81	0.65
0.06	0.06	.140E+02	0.4	0.90	0.58
0.07	0.07	.161E+02	0.5	0.99	0.53
0.08	0.08	.182E+02	0.6	1.07	0.49
0.09	0.09	.203E+02	0.7	1.15	0.45
0.09	0.09	.224E+02	0.9	1.23	0.42
0.10	0.10	.245E+02	1.0	1.31	0.40
0.11	0.11	.266E+02	1.2	1.38	0.38
0.12	0.12	.287E+02	1.3	1.45	0.36
0.13	0.13	.308E+02	1.5	1.52	0.34
0.13	0.13	.329E+02	1.7	1.59	0.33
0.14	0.14	.350E+02	1.9	1.66	0.31
0.15	0.15	.371E+02	2.0	1.73	0.30

**** WARNING: TRAVEL TIME TABLE EXCEEDED

	AREA (ha)	<---- hydrograph ----> QPEAK (cms)	TPEAK (hrs)	R.V. (mm)	<-pipe / channel-> MAX DEPTH (m)	MAX VEL (m/s)
INFLOW : ID= 2 (16000)	103.80	6.69	9.33	56.88	0.14	1.66
OUTFLOW: ID= 1 (15001)	103.80	6.70	9.33	56.88	0.14	1.67

```
--------------------------------------------------------------------------------
--------------------
| CALIB              |
| STANDHYD (  1500)|   Area    (ha)=   0.11
|ID= 1 DT= 5.0 min |   Total Imp(%)=  85.00   Dir. Conn.(%)=  82.00
--------------------
```

		IMPERVIOUS	PERVIOUS (i)
Surface Area	(ha)=	0.09	0.02
Dep. Storage	(mm)=	1.00	1.50
Average Slope	(%)=	1.00	2.00
Length	(m)=	27.08	40.00
Mannings n	=	0.013	0.250

NOTE: RAINFALL WAS TRANSFORMED TO   5.0 MIN. TIME STEP.

---- TRANSFORMED HYETOGRAPH ----

TIME hrs	RAIN mm/hr	TIME hrs	RAIN mm/hr	TIME hrs	RAIN mm/hr	TIME hrs	RAIN mm/hr

0.083	0.52	6.083	1.53	12.083	2.53	18.08	0.83
0.167	0.52	6.167	1.53	12.167	2.53	18.17	0.83
0.250	0.53	6.250	1.63	12.250	2.39	18.25	0.82
0.333	0.53	6.333	1.63	12.333	2.39	18.33	0.82
0.417	0.54	6.417	1.73	12.417	2.26	18.42	0.80
0.500	0.54	6.500	1.73	12.500	2.26	18.50	0.80
0.583	0.55	6.583	1.85	12.583	2.15	18.58	0.79
0.667	0.55	6.667	1.85	12.667	2.15	18.67	0.79
0.750	0.56	6.750	2.00	12.750	2.04	18.75	0.77
0.833	0.56	6.833	2.00	12.833	2.04	18.83	0.77
0.917	0.57	6.917	2.16	12.917	1.95	18.92	0.76
1.000	0.57	7.000	2.16	13.000	1.95	19.00	0.76
1.083	0.58	7.083	2.35	13.083	1.87	19.08	0.75
1.167	0.58	7.167	2.35	13.167	1.87	19.17	0.75
1.250	0.60	7.250	2.59	13.250	1.79	19.25	0.74
1.333	0.60	7.333	2.59	13.333	1.79	19.33	0.74
1.417	0.61	7.417	2.87	13.417	1.72	19.42	0.73
1.500	0.61	7.500	2.87	13.500	1.72	19.50	0.73
1.583	0.62	7.583	3.23	13.583	1.65	19.58	0.72
1.667	0.62	7.667	3.23	13.667	1.65	19.67	0.72
1.750	0.63	7.750	3.69	13.750	1.59	19.75	0.71
1.833	0.63	7.833	3.69	13.833	1.59	19.83	0.71
1.917	0.65	7.917	4.30	13.917	1.54	19.92	0.69
2.000	0.65	8.000	4.30	14.000	1.54	20.00	0.69
2.083	0.66	8.083	5.16	14.083	1.48	20.08	0.68
2.167	0.66	8.167	5.16	14.167	1.48	20.17	0.68
2.250	0.68	8.250	6.42	14.250	1.44	20.25	0.68
2.333	0.68	8.333	6.42	14.333	1.44	20.33	0.68
2.417	0.70	8.417	8.44	14.417	1.39	20.42	0.67
2.500	0.70	8.500	8.44	14.500	1.39	20.50	0.67
2.583	0.71	8.583	12.12	14.583	1.35	20.58	0.66
2.667	0.71	8.667	12.12	14.667	1.35	20.67	0.66
2.750	0.73	8.750	20.49	14.750	1.31	20.75	0.65
2.833	0.73	8.833	20.49	14.833	1.31	20.83	0.65
2.917	0.75	8.917	51.45	14.917	1.27	20.92	0.64
3.000	0.75	9.000	51.45	15.000	1.27	21.00	0.64
3.083	0.77	9.083	157.29	15.083	1.24	21.08	0.63
3.167	0.77	9.167	157.29	15.167	1.24	21.17	0.63
3.250	0.79	9.250	62.45	15.250	1.20	21.25	0.62
3.333	0.79	9.333	62.45	15.333	1.20	21.33	0.62
3.417	0.81	9.417	31.10	15.417	1.17	21.42	0.61
3.500	0.81	9.500	31.10	15.500	1.17	21.50	0.61
3.583	0.84	9.583	19.70	15.583	1.14	21.58	0.61
3.667	0.84	9.667	19.70	15.667	1.14	21.67	0.61
3.750	0.86	9.750	14.09	15.750	1.11	21.75	0.60
3.833	0.86	9.833	14.09	15.833	1.11	21.83	0.60
3.917	0.89	9.917	10.83	15.917	1.09	21.92	0.59
4.000	0.89	10.000	10.83	16.000	1.09	22.00	0.59
4.083	0.92	10.083	8.74	16.083	1.06	22.08	0.58
4.167	0.92	10.167	8.74	16.167	1.06	22.17	0.58
4.250	0.95	10.250	7.30	16.250	1.04	22.25	0.58
4.333	0.95	10.333	7.30	16.333	1.04	22.33	0.58
4.417	0.98	10.417	6.25	16.417	1.01	22.42	0.57
4.500	0.98	10.500	6.25	16.500	1.01	22.50	0.57
4.583	1.02	10.583	5.46	16.583	0.99	22.58	0.56
4.667	1.02	10.667	5.46	16.667	0.99	22.67	0.56
4.750	1.06	10.750	4.84	16.750	0.97	22.75	0.56
4.833	1.06	10.833	4.84	16.833	0.97	22.83	0.56
4.917	1.10	10.917	4.35	16.917	0.95	22.92	0.55
5.000	1.10	11.000	4.35	17.000	0.95	23.00	0.55
5.083	1.15	11.083	3.94	17.083	0.93	23.08	0.55
5.167	1.15	11.167	3.94	17.167	0.93	23.17	0.55
5.250	1.20	11.250	3.61	17.250	0.91	23.25	0.54
5.333	1.20	11.333	3.61	17.333	0.91	23.33	0.54

5.417	1.25	11.417	3.32	17.417	0.89	23.42	0.53
5.500	1.25	11.500	3.32	17.500	0.89	23.50	0.53
5.583	1.31	11.583	3.08	17.583	0.88	23.58	0.53
5.667	1.31	11.667	3.08	17.667	0.88	23.67	0.53
5.750	1.38	11.750	2.87	17.750	0.86	23.75	0.52
5.833	1.38	11.833	2.87	17.833	0.86	23.83	0.52
5.917	1.45	11.917	2.69	17.917	0.85	23.92	0.52
6.000	1.45	12.000	2.69	18.000	0.85	24.00	0.52

Max.Eff.Inten.(mm/hr)=	157.29	175.52	
over (min)	5.00	5.00	
Storage Coeff. (min)=	0.97 (ii)	3.96 (ii)	
Unit Hyd. Tpeak (min)=	5.00	5.00	
Unit Hyd. peak (cms)=	0.34	0.24	
			TOTALS
PEAK FLOW (cms)=	0.04	0.01	0.047 (iii)
TIME TO PEAK (hrs)=	9.17	9.17	9.17
RUNOFF VOLUME (mm)=	97.20	85.09	95.01
TOTAL RAINFALL (mm)=	98.20	98.20	98.20
RUNOFF COEFFICIENT =	0.99	0.87	0.97

***** WARNING: STORAGE COEFF. IS SMALLER THAN TIME STEP!

(i) CN PROCEDURE SELECTED FOR PERVIOUS LOSSES:
CN* = 94.0 Ia = Dep. Storage (Above)
(ii) TIME STEP (DT) SHOULD BE SMALLER OR EQUAL
THAN THE STORAGE COEFFICIENT.
(iii) PEAK FLOW DOES NOT INCLUDE BASEFLOW IF ANY.

ADD HYD (15000)		AREA	QPEAK	TPEAK	R.V.
		(ha)	(cms)	(hrs)	(mm)
1 + 2 = 3	ID1= 1 (1500):	0.11	0.047	9.17	95.01
	+ ID2= 2 (15001):	103.80	6.698	9.33	56.88
	ID = 3 (15000):	103.91	6.718	9.33	56.92

NOTE: PEAK FLOWS DO NOT INCLUDE BASEFLOWS IF ANY.

CALIB STANDHYD (1501)	Area (ha)= 0.56		
ID= 1 DT= 5.0 min	Total Imp(%)= 70.00	Dir. Conn.(%)= 40.00	
	IMPERVIOUS	PERVIOUS (i)	
Surface Area (ha)=	0.39	0.17	
Dep. Storage (mm)=	1.00	1.50	
Average Slope (%)=	1.00	2.00	
Length (m)=	61.10	40.00	
Mannings n =	0.013	0.250	

NOTE: RAINFALL WAS TRANSFORMED TO 5.0 MIN. TIME STEP.

---- TRANSFORMED HYETOGRAPH ----

TIME hrs	RAIN mm/hr	TIME hrs	RAIN mm/hr	TIME hrs	RAIN mm/hr	TIME hrs	RAIN mm/hr
0.083	0.52	6.083	1.53	12.083	2.53	18.08	0.83
0.167	0.52	6.167	1.53	12.167	2.53	18.17	0.83
0.250	0.53	6.250	1.63	12.250	2.39	18.25	0.82
0.333	0.53	6.333	1.63	12.333	2.39	18.33	0.82

0.417	0.54	6.417	1.73	12.417	2.26	18.42	0.80
0.500	0.54	6.500	1.73	12.500	2.26	18.50	0.80
0.583	0.55	6.583	1.85	12.583	2.15	18.58	0.79
0.667	0.55	6.667	1.85	12.667	2.15	18.67	0.79
0.750	0.56	6.750	2.00	12.750	2.04	18.75	0.77
0.833	0.56	6.833	2.00	12.833	2.04	18.83	0.77
0.917	0.57	6.917	2.16	12.917	1.95	18.92	0.76
1.000	0.57	7.000	2.16	13.000	1.95	19.00	0.76
1.083	0.58	7.083	2.35	13.083	1.87	19.08	0.75
1.167	0.58	7.167	2.35	13.167	1.87	19.17	0.75
1.250	0.60	7.250	2.59	13.250	1.79	19.25	0.74
1.333	0.60	7.333	2.59	13.333	1.79	19.33	0.74
1.417	0.61	7.417	2.87	13.417	1.72	19.42	0.73
1.500	0.61	7.500	2.87	13.500	1.72	19.50	0.73
1.583	0.62	7.583	3.23	13.583	1.65	19.58	0.72
1.667	0.62	7.667	3.23	13.667	1.65	19.67	0.72
1.750	0.63	7.750	3.69	13.750	1.59	19.75	0.71
1.833	0.63	7.833	3.69	13.833	1.59	19.83	0.71
1.917	0.65	7.917	4.30	13.917	1.54	19.92	0.69
2.000	0.65	8.000	4.30	14.000	1.54	20.00	0.69
2.083	0.66	8.083	5.16	14.083	1.48	20.08	0.68
2.167	0.66	8.167	5.16	14.167	1.48	20.17	0.68
2.250	0.68	8.250	6.42	14.250	1.44	20.25	0.68
2.333	0.68	8.333	6.42	14.333	1.44	20.33	0.68
2.417	0.70	8.417	8.44	14.417	1.39	20.42	0.67
2.500	0.70	8.500	8.44	14.500	1.39	20.50	0.67
2.583	0.71	8.583	12.12	14.583	1.35	20.58	0.66
2.667	0.71	8.667	12.12	14.667	1.35	20.67	0.66
2.750	0.73	8.750	20.49	14.750	1.31	20.75	0.65
2.833	0.73	8.833	20.49	14.833	1.31	20.83	0.65
2.917	0.75	8.917	51.45	14.917	1.27	20.92	0.64
3.000	0.75	9.000	51.45	15.000	1.27	21.00	0.64
3.083	0.77	9.083	157.29	15.083	1.24	21.08	0.63
3.167	0.77	9.167	157.29	15.167	1.24	21.17	0.63
3.250	0.79	9.250	62.45	15.250	1.20	21.25	0.62
3.333	0.79	9.333	62.45	15.333	1.20	21.33	0.62
3.417	0.81	9.417	31.10	15.417	1.17	21.42	0.61
3.500	0.81	9.500	31.10	15.500	1.17	21.50	0.61
3.583	0.84	9.583	19.70	15.583	1.14	21.58	0.61
3.667	0.84	9.667	19.70	15.667	1.14	21.67	0.61
3.750	0.86	9.750	14.09	15.750	1.11	21.75	0.60
3.833	0.86	9.833	14.09	15.833	1.11	21.83	0.60
3.917	0.89	9.917	10.83	15.917	1.09	21.92	0.59
4.000	0.89	10.000	10.83	16.000	1.09	22.00	0.59
4.083	0.92	10.083	8.74	16.083	1.06	22.08	0.58
4.167	0.92	10.167	8.74	16.167	1.06	22.17	0.58
4.250	0.95	10.250	7.30	16.250	1.04	22.25	0.58
4.333	0.95	10.333	7.30	16.333	1.04	22.33	0.58
4.417	0.98	10.417	6.25	16.417	1.01	22.42	0.57
4.500	0.98	10.500	6.25	16.500	1.01	22.50	0.57
4.583	1.02	10.583	5.46	16.583	0.99	22.58	0.56
4.667	1.02	10.667	5.46	16.667	0.99	22.67	0.56
4.750	1.06	10.750	4.84	16.750	0.97	22.75	0.56
4.833	1.06	10.833	4.84	16.833	0.97	22.83	0.56
4.917	1.10	10.917	4.35	16.917	0.95	22.92	0.55
5.000	1.10	11.000	4.35	17.000	0.95	23.00	0.55
5.083	1.15	11.083	3.94	17.083	0.93	23.08	0.55
5.167	1.15	11.167	3.94	17.167	0.93	23.17	0.55
5.250	1.20	11.250	3.61	17.250	0.91	23.25	0.54
5.333	1.20	11.333	3.61	17.333	0.91	23.33	0.54
5.417	1.25	11.417	3.32	17.417	0.89	23.42	0.53
5.500	1.25	11.500	3.32	17.500	0.89	23.50	0.53
5.583	1.31	11.583	3.08	17.583	0.88	23.58	0.53
5.667	1.31	11.667	3.08	17.667	0.88	23.67	0.53

5.750	1.38	11.750	2.87	17.750	0.86	23.75	0.52
5.833	1.38	11.833	2.87	17.833	0.86	23.83	0.52
5.917	1.45	11.917	2.69	17.917	0.85	23.92	0.52
6.000	1.45	12.000	2.69	18.000	0.85	24.00	0.52

Max.Eff.Inten.(mm/hr)=	157.29	258.91	
over (min)	5.00	10.00	
Storage Coeff. (min)=	1.59 (ii)	6.41 (ii)	
Unit Hyd. Tpeak (min)=	5.00	10.00	
Unit Hyd. peak (cms)=	0.33	0.14	
			TOTALS
PEAK FLOW (cms)=	0.10	0.09	0.184 (iii)
TIME TO PEAK (hrs)=	9.17	9.25	9.17
RUNOFF VOLUME (mm)=	97.20	75.77	84.33
TOTAL RAINFALL (mm)=	98.20	98.20	98.20
RUNOFF COEFFICIENT =	0.99	0.77	0.86

***** WARNING: STORAGE COEFF. IS SMALLER THAN TIME STEP!

(i) CN PROCEDURE SELECTED FOR PERVIOUS LOSSES:
CN* = 82.0 Ia = Dep. Storage (Above)
(ii) TIME STEP (DT) SHOULD BE SMALLER OR EQUAL
THAN THE STORAGE COEFFICIENT.
(iii) PEAK FLOW DOES NOT INCLUDE BASEFLOW IF ANY.

ADD HYD (0005)		AREA	QPEAK	TPEAK	R.V.
		(ha)	(cms)	(hrs)	(mm)
1 + 2 = 3	ID1= 1 (15000):	103.91	6.718	9.33	56.92
	+ ID2= 2 (1501):	0.56	0.184	9.17	84.33
	ID = 3 (0005):	104.47	6.827	9.33	57.07

NOTE: PEAK FLOWS DO NOT INCLUDE BASEFLOWS IF ANY.

ROUTE CHN(14001)	
IN= 2---> OUT= 1	Routing time step (min)'= 5.00

<------ DATA FOR SECTION (1.1) ------>

Distance	Elevation	Manning	
0.00	0.15	0.0110	
0.01	0.00	0.0110 /0.0110	Main Channel
4.26	0.02	0.0110	Main Channel
8.51	0.00	0.0110 /0.0110	Main Channel
8.52	0.15	0.0110	

<---------- TRAVEL TIME TABLE ---------->

DEPTH (m)	ELEV (m)	VOLUME (cu.m.)	FLOW RATE (cms)	VELOCITY (m/s)	TRAV.TIME (min)
0.01	0.01	.253E+00	0.0	0.16	2.11
0.02	0.02	.101E+01	0.0	0.25	1.33
0.02	0.02	.225E+01	0.0	0.36	0.95
0.03	0.03	.362E+01	0.1	0.49	0.69
0.04	0.04	.498E+01	0.1	0.60	0.56
0.05	0.05	.634E+01	0.2	0.71	0.48
0.06	0.06	.771E+01	0.3	0.81	0.42
0.06	0.06	.907E+01	0.4	0.90	0.38
0.07	0.07	.104E+02	0.5	0.99	0.34
0.08	0.08	.118E+02	0.6	1.07	0.32
0.09	0.09	.132E+02	0.7	1.15	0.29

0.09	0.09	.145E+02	0.9	1.23	0.27
0.10	0.10	.159E+02	1.0	1.31	0.26
0.11	0.11	.173E+02	1.2	1.38	0.24
0.12	0.12	.186E+02	1.3	1.45	0.23
0.13	0.13	.200E+02	1.5	1.52	0.22
0.13	0.13	.213E+02	1.7	1.59	0.21
0.14	0.14	.227E+02	1.9	1.66	0.20
0.15	0.15	.241E+02	2.0	1.73	0.20

**** WARNING: TRAVEL TIME TABLE EXCEEDED

		<---- hydrograph ---->			<-pipe / channel->	
	AREA	QPEAK	TPEAK	R.V.	MAX DEPTH	MAX VEL
	(ha)	(cms)	(hrs)	(mm)	(m)	(m/s)
INFLOW : ID= 2 (0005)	104.47	6.83	9.33	57.07	0.14	1.67
OUTFLOW: ID= 1 (14001)	104.47	6.84	9.33	57.07	0.14	1.68

CALIB	
STANDHYD (1400)	Area (ha)= 0.06
ID= 1 DT= 5.0 min	Total Imp(%)= 85.00 Dir. Conn.(%)= 85.00

		IMPERVIOUS	PERVIOUS (i)
Surface Area	(ha)=	0.05	0.01
Dep. Storage	(mm)=	1.00	1.50
Average Slope	(%)=	1.00	2.00
Length	(m)=	20.00	40.00
Mannings n	=	0.013	0.250

NOTE: RAINFALL WAS TRANSFORMED TO 5.0 MIN. TIME STEP.

---- TRANSFORMED HYETOGRAPH ----

TIME hrs	RAIN mm/hr	TIME hrs	RAIN mm/hr	TIME hrs	RAIN mm/hr	TIME hrs	RAIN mm/hr
0.083	0.52	6.083	1.53	12.083	2.53	18.08	0.83
0.167	0.52	6.167	1.53	12.167	2.53	18.17	0.83
0.250	0.53	6.250	1.63	12.250	2.39	18.25	0.82
0.333	0.53	6.333	1.63	12.333	2.39	18.33	0.82
0.417	0.54	6.417	1.73	12.417	2.26	18.42	0.80
0.500	0.54	6.500	1.73	12.500	2.26	18.50	0.80
0.583	0.55	6.583	1.85	12.583	2.15	18.58	0.79
0.667	0.55	6.667	1.85	12.667	2.15	18.67	0.79
0.750	0.56	6.750	2.00	12.750	2.04	18.75	0.77
0.833	0.56	6.833	2.00	12.833	2.04	18.83	0.77
0.917	0.57	6.917	2.16	12.917	1.95	18.92	0.76
1.000	0.57	7.000	2.16	13.000	1.95	19.00	0.76
1.083	0.58	7.083	2.35	13.083	1.87	19.08	0.75
1.167	0.58	7.167	2.35	13.167	1.87	19.17	0.75
1.250	0.60	7.250	2.59	13.250	1.79	19.25	0.74
1.333	0.60	7.333	2.59	13.333	1.79	19.33	0.74
1.417	0.61	7.417	2.87	13.417	1.72	19.42	0.73
1.500	0.61	7.500	2.87	13.500	1.72	19.50	0.73
1.583	0.62	7.583	3.23	13.583	1.65	19.58	0.72
1.667	0.62	7.667	3.23	13.667	1.65	19.67	0.72
1.750	0.63	7.750	3.69	13.750	1.59	19.75	0.71
1.833	0.63	7.833	3.69	13.833	1.59	19.83	0.71
1.917	0.65	7.917	4.30	13.917	1.54	19.92	0.69
2.000	0.65	8.000	4.30	14.000	1.54	20.00	0.69
2.083	0.66	8.083	5.16	14.083	1.48	20.08	0.68
2.167	0.66	8.167	5.16	14.167	1.48	20.17	0.68
2.250	0.68	8.250	6.42	14.250	1.44	20.25	0.68

2.333	0.68	8.333	6.42	14.333	1.44	20.33	0.68
2.417	0.70	8.417	8.44	14.417	1.39	20.42	0.67
2.500	0.70	8.500	8.44	14.500	1.39	20.50	0.67
2.583	0.71	8.583	12.12	14.583	1.35	20.58	0.66
2.667	0.71	8.667	12.12	14.667	1.35	20.67	0.66
2.750	0.73	8.750	20.49	14.750	1.31	20.75	0.65
2.833	0.73	8.833	20.49	14.833	1.31	20.83	0.65
2.917	0.75	8.917	51.45	14.917	1.27	20.92	0.64
3.000	0.75	9.000	51.45	15.000	1.27	21.00	0.64
3.083	0.77	9.083	157.29	15.083	1.24	21.08	0.63
3.167	0.77	9.167	157.29	15.167	1.24	21.17	0.63
3.250	0.79	9.250	62.45	15.250	1.20	21.25	0.62
3.333	0.79	9.333	62.45	15.333	1.20	21.33	0.62
3.417	0.81	9.417	31.10	15.417	1.17	21.42	0.61
3.500	0.81	9.500	31.10	15.500	1.17	21.50	0.61
3.583	0.84	9.583	19.70	15.583	1.14	21.58	0.61
3.667	0.84	9.667	19.70	15.667	1.14	21.67	0.61
3.750	0.86	9.750	14.09	15.750	1.11	21.75	0.60
3.833	0.86	9.833	14.09	15.833	1.11	21.83	0.60
3.917	0.89	9.917	10.83	15.917	1.09	21.92	0.59
4.000	0.89	10.000	10.83	16.000	1.09	22.00	0.59
4.083	0.92	10.083	8.74	16.083	1.06	22.08	0.58
4.167	0.92	10.167	8.74	16.167	1.06	22.17	0.58
4.250	0.95	10.250	7.30	16.250	1.04	22.25	0.58
4.333	0.95	10.333	7.30	16.333	1.04	22.33	0.58
4.417	0.98	10.417	6.25	16.417	1.01	22.42	0.57
4.500	0.98	10.500	6.25	16.500	1.01	22.50	0.57
4.583	1.02	10.583	5.46	16.583	0.99	22.58	0.56
4.667	1.02	10.667	5.46	16.667	0.99	22.67	0.56
4.750	1.06	10.750	4.84	16.750	0.97	22.75	0.56
4.833	1.06	10.833	4.84	16.833	0.97	22.83	0.56
4.917	1.10	10.917	4.35	16.917	0.95	22.92	0.55
5.000	1.10	11.000	4.35	17.000	0.95	23.00	0.55
5.083	1.15	11.083	3.94	17.083	0.93	23.08	0.55
5.167	1.15	11.167	3.94	17.167	0.93	23.17	0.55
5.250	1.20	11.250	3.61	17.250	0.91	23.25	0.54
5.333	1.20	11.333	3.61	17.333	0.91	23.33	0.54
5.417	1.25	11.417	3.32	17.417	0.89	23.42	0.53
5.500	1.25	11.500	3.32	17.500	0.89	23.50	0.53
5.583	1.31	11.583	3.08	17.583	0.88	23.58	0.53
5.667	1.31	11.667	3.08	17.667	0.88	23.67	0.53
5.750	1.38	11.750	2.87	17.750	0.86	23.75	0.52
5.833	1.38	11.833	2.87	17.833	0.86	23.83	0.52
5.917	1.45	11.917	2.69	17.917	0.85	23.92	0.52
6.000	1.45	12.000	2.69	18.000	0.85	24.00	0.52

Max.Eff.Inten.(mm/hr)=	157.29	146.32	
over (min)	5.00	5.00	
Storage Coeff. (min)=	0.81 (ii)	3.75 (ii)	
Unit Hyd. Tpeak (min)=	5.00	5.00	
Unit Hyd. peak (cms)=	0.34	0.25	
			TOTALS
PEAK FLOW (cms)=	0.02	0.00	0.026 (iii)
TIME TO PEAK (hrs)=	9.17	9.17	9.17
RUNOFF VOLUME (mm)=	97.20	84.95	94.06
TOTAL RAINFALL (mm)=	98.20	98.20	98.20
RUNOFF COEFFICIENT =	0.99	0.87	0.96

***** WARNING: STORAGE COEFF. IS SMALLER THAN TIME STEP!

(i) CN PROCEDURE SELECTED FOR PERVIOUS LOSSES:
CN* = 95.0 Ia = Dep. Storage (Above)
(ii) TIME STEP (DT) SHOULD BE SMALLER OR EQUAL
THAN THE STORAGE COEFFICIENT.

(iii) PEAK FLOW DOES NOT INCLUDE BASEFLOW IF ANY.

ADD HYD (14000)
1 + 2 = 3

	AREA (ha)	QPEAK (cms)	TPEAK (hrs)	R.V. (mm)
ID1= 1 (1400):	0.06	0.026	9.17	94.06
+ ID2= 2 (14001):	104.47	6.836	9.33	57.07
ID = 3 (14000):	104.53	6.846	9.33	57.09

NOTE: PEAK FLOWS DO NOT INCLUDE BASEFLOWS IF ANY.

ROUTE CHN(13001)
IN= 2---> OUT= 1

Routing time step (min)'= 5.00

<------ DATA FOR SECTION (1.1) ------>

Distance	Elevation	Manning	
0.00	0.15	0.0110	
0.01	0.00	0.0110 /0.0110	Main Channel
4.26	0.02	0.0110	Main Channel
8.51	0.00	0.0110 /0.0110	Main Channel
8.52	0.15	0.0110	

<---------- TRAVEL TIME TABLE ---------->

DEPTH (m)	ELEV (m)	VOLUME (cu.m.)	FLOW RATE (cms)	VELOCITY (m/s)	TRAV.TIME (min)
0.01	0.01	.232E+00	0.0	0.16	1.93
0.02	0.02	.927E+00	0.0	0.25	1.22
0.02	0.02	.206E+01	0.0	0.36	0.87
0.03	0.03	.331E+01	0.1	0.49	0.63
0.04	0.04	.456E+01	0.1	0.60	0.51
0.05	0.05	.581E+01	0.2	0.71	0.44
0.06	0.06	.706E+01	0.3	0.81	0.38
0.06	0.06	.831E+01	0.4	0.90	0.34
0.07	0.07	.956E+01	0.5	0.99	0.31
0.08	0.08	.108E+02	0.6	1.07	0.29
0.09	0.09	.121E+02	0.7	1.15	0.27
0.09	0.09	.133E+02	0.9	1.23	0.25
0.10	0.10	.146E+02	1.0	1.31	0.24
0.11	0.11	.158E+02	1.2	1.38	0.22
0.12	0.12	.171E+02	1.3	1.45	0.21
0.13	0.13	.183E+02	1.5	1.52	0.20
0.13	0.13	.196E+02	1.7	1.59	0.19
0.14	0.14	.208E+02	1.9	1.66	0.19
0.15	0.15	.221E+02	2.0	1.73	0.18

**** WARNING: TRAVEL TIME TABLE EXCEEDED

	AREA (ha)	<---- hydrograph ----> QPEAK (cms)	TPEAK (hrs)	R.V. (mm)	<-pipe / channel-> MAX DEPTH (m)	MAX VEL (m/s)
INFLOW : ID= 2 (14000)	104.53	6.85	9.33	57.09	0.14	1.68
OUTFLOW: ID= 1 (13001)	104.53	6.85	9.33	57.09	0.15	1.69

CALIB
STANDHYD (1300)
ID= 1 DT= 5.0 min

Area (ha)= 0.06
Total Imp(%)= 88.00 Dir. Conn.(%)= 88.00

		IMPERVIOUS	PERVIOUS (i)
Surface Area	(ha)=	0.05	0.01
Dep. Storage	(mm)=	1.00	1.50
Average Slope	(%)=	1.00	2.00
Length	(m)=	20.00	40.00
Mannings n	=	0.013	0.250

NOTE: RAINFALL WAS TRANSFORMED TO 5.0 MIN. TIME STEP.

---- TRANSFORMED HYETOGRAPH ----

TIME hrs	RAIN mm/hr	TIME hrs	RAIN mm/hr	TIME hrs	RAIN mm/hr	TIME hrs	RAIN mm/hr
0.083	0.52	6.083	1.53	12.083	2.53	18.08	0.83
0.167	0.52	6.167	1.53	12.167	2.53	18.17	0.83
0.250	0.53	6.250	1.63	12.250	2.39	18.25	0.82
0.333	0.53	6.333	1.63	12.333	2.39	18.33	0.82
0.417	0.54	6.417	1.73	12.417	2.26	18.42	0.80
0.500	0.54	6.500	1.73	12.500	2.26	18.50	0.80
0.583	0.55	6.583	1.85	12.583	2.15	18.58	0.79
0.667	0.55	6.667	1.85	12.667	2.15	18.67	0.79
0.750	0.56	6.750	2.00	12.750	2.04	18.75	0.77
0.833	0.56	6.833	2.00	12.833	2.04	18.83	0.77
0.917	0.57	6.917	2.16	12.917	1.95	18.92	0.76
1.000	0.57	7.000	2.16	13.000	1.95	19.00	0.76
1.083	0.58	7.083	2.35	13.083	1.87	19.08	0.75
1.167	0.58	7.167	2.35	13.167	1.87	19.17	0.75
1.250	0.60	7.250	2.59	13.250	1.79	19.25	0.74
1.333	0.60	7.333	2.59	13.333	1.79	19.33	0.74
1.417	0.61	7.417	2.87	13.417	1.72	19.42	0.73
1.500	0.61	7.500	2.87	13.500	1.72	19.50	0.73
1.583	0.62	7.583	3.23	13.583	1.65	19.58	0.72
1.667	0.62	7.667	3.23	13.667	1.65	19.67	0.72
1.750	0.63	7.750	3.69	13.750	1.59	19.75	0.71
1.833	0.63	7.833	3.69	13.833	1.59	19.83	0.71
1.917	0.65	7.917	4.30	13.917	1.54	19.92	0.69
2.000	0.65	8.000	4.30	14.000	1.54	20.00	0.69
2.083	0.66	8.083	5.16	14.083	1.48	20.08	0.68
2.167	0.66	8.167	5.16	14.167	1.48	20.17	0.68
2.250	0.68	8.250	6.42	14.250	1.44	20.25	0.68
2.333	0.68	8.333	6.42	14.333	1.44	20.33	0.68
2.417	0.70	8.417	8.44	14.417	1.39	20.42	0.67
2.500	0.70	8.500	8.44	14.500	1.39	20.50	0.67
2.583	0.71	8.583	12.12	14.583	1.35	20.58	0.66
2.667	0.71	8.667	12.12	14.667	1.35	20.67	0.66
2.750	0.73	8.750	20.49	14.750	1.31	20.75	0.65
2.833	0.73	8.833	20.49	14.833	1.31	20.83	0.65
2.917	0.75	8.917	51.45	14.917	1.27	20.92	0.64
3.000	0.75	9.000	51.45	15.000	1.27	21.00	0.64
3.083	0.77	9.083	157.29	15.083	1.24	21.08	0.63
3.167	0.77	9.167	157.29	15.167	1.24	21.17	0.63
3.250	0.79	9.250	62.45	15.250	1.20	21.25	0.62
3.333	0.79	9.333	62.45	15.333	1.20	21.33	0.62
3.417	0.81	9.417	31.10	15.417	1.17	21.42	0.61
3.500	0.81	9.500	31.10	15.500	1.17	21.50	0.61
3.583	0.84	9.583	19.70	15.583	1.14	21.58	0.61
3.667	0.84	9.667	19.70	15.667	1.14	21.67	0.61
3.750	0.86	9.750	14.09	15.750	1.11	21.75	0.60
3.833	0.86	9.833	14.09	15.833	1.11	21.83	0.60
3.917	0.89	9.917	10.83	15.917	1.09	21.92	0.59
4.000	0.89	10.000	10.83	16.000	1.09	22.00	0.59
4.083	0.92	10.083	8.74	16.083	1.06	22.08	0.58
4.167	0.92	10.167	8.74	16.167	1.06	22.17	0.58

4.250	0.95	10.250	7.30	16.250	1.04	22.25	0.58
4.333	0.95	10.333	7.30	16.333	1.04	22.33	0.58
4.417	0.98	10.417	6.25	16.417	1.01	22.42	0.57
4.500	0.98	10.500	6.25	16.500	1.01	22.50	0.57
4.583	1.02	10.583	5.46	16.583	0.99	22.58	0.56
4.667	1.02	10.667	5.46	16.667	0.99	22.67	0.56
4.750	1.06	10.750	4.84	16.750	0.97	22.75	0.56
4.833	1.06	10.833	4.84	16.833	0.97	22.83	0.56
4.917	1.10	10.917	4.35	16.917	0.95	22.92	0.55
5.000	1.10	11.000	4.35	17.000	0.95	23.00	0.55
5.083	1.15	11.083	3.94	17.083	0.93	23.08	0.55
5.167	1.15	11.167	3.94	17.167	0.93	23.17	0.55
5.250	1.20	11.250	3.61	17.250	0.91	23.25	0.54
5.333	1.20	11.333	3.61	17.333	0.91	23.33	0.54
5.417	1.25	11.417	3.32	17.417	0.89	23.42	0.53
5.500	1.25	11.500	3.32	17.500	0.89	23.50	0.53
5.583	1.31	11.583	3.08	17.583	0.88	23.58	0.53
5.667	1.31	11.667	3.08	17.667	0.88	23.67	0.53
5.750	1.38	11.750	2.87	17.750	0.86	23.75	0.52
5.833	1.38	11.833	2.87	17.833	0.86	23.83	0.52
5.917	1.45	11.917	2.69	17.917	0.85	23.92	0.52
6.000	1.45	12.000	2.69	18.000	0.85	24.00	0.52

Max.Eff.Inten.(mm/hr)=	157.29	146.32	
over (min)	5.00	5.00	
Storage Coeff. (min)=	0.81 (ii)	3.47 (ii)	
Unit Hyd. Tpeak (min)=	5.00	5.00	
Unit Hyd. peak (cms)=	0.34	0.26	
			TOTALS
PEAK FLOW (cms)=	0.02	0.00	0.026 (iii)
TIME TO PEAK (hrs)=	9.17	9.17	9.17
RUNOFF VOLUME (mm)=	97.20	84.95	94.43
TOTAL RAINFALL (mm)=	98.20	98.20	98.20
RUNOFF COEFFICIENT =	0.99	0.87	0.96

***** WARNING: STORAGE COEFF. IS SMALLER THAN TIME STEP!

(i) CN PROCEDURE SELECTED FOR PERVIOUS LOSSES:
CN* = 95.0 Ia = Dep. Storage (Above)
(ii) TIME STEP (DT) SHOULD BE SMALLER OR EQUAL
THAN THE STORAGE COEFFICIENT.
(iii) PEAK FLOW DOES NOT INCLUDE BASEFLOW IF ANY.

ADD HYD (13000)		AREA	QPEAK	TPEAK	R.V.
		(ha)	(cms)	(hrs)	(mm)
1 + 2 = 3	ID1= 1 (1300):	0.06	0.026	9.17	94.43
	+ ID2= 2 (13001):	104.53	6.853	9.33	57.09
	ID = 3 (13000):	104.59	6.863	9.33	57.11

NOTE: PEAK FLOWS DO NOT INCLUDE BASEFLOWS IF ANY.

CALIB STANDHYD (1201)	Area (ha)= 0.32	
ID= 1 DT= 5.0 min	Total Imp(%)= 81.00	Dir. Conn.(%)= 78.00

		IMPERVIOUS	PERVIOUS (i)
Surface Area	(ha)=	0.26	0.06
Dep. Storage	(mm)=	1.00	1.50

Average Slope	(%)=	1.00	2.00
Length	(m)=	46.19	40.00
Mannings n	=	0.013	0.250

NOTE: RAINFALL WAS TRANSFORMED TO 5.0 MIN. TIME STEP.

---- TRANSFORMED HYETOGRAPH ----

TIME hrs	RAIN mm/hr	TIME hrs	RAIN mm/hr	TIME hrs	RAIN mm/hr	TIME hrs	RAIN mm/hr
0.083	0.52	6.083	1.53	12.083	2.53	18.08	0.83
0.167	0.52	6.167	1.53	12.167	2.53	18.17	0.83
0.250	0.53	6.250	1.63	12.250	2.39	18.25	0.82
0.333	0.53	6.333	1.63	12.333	2.39	18.33	0.82
0.417	0.54	6.417	1.73	12.417	2.26	18.42	0.80
0.500	0.54	6.500	1.73	12.500	2.26	18.50	0.80
0.583	0.55	6.583	1.85	12.583	2.15	18.58	0.79
0.667	0.55	6.667	1.85	12.667	2.15	18.67	0.79
0.750	0.56	6.750	2.00	12.750	2.04	18.75	0.77
0.833	0.56	6.833	2.00	12.833	2.04	18.83	0.77
0.917	0.57	6.917	2.16	12.917	1.95	18.92	0.76
1.000	0.57	7.000	2.16	13.000	1.95	19.00	0.76
1.083	0.58	7.083	2.35	13.083	1.87	19.08	0.75
1.167	0.58	7.167	2.35	13.167	1.87	19.17	0.75
1.250	0.60	7.250	2.59	13.250	1.79	19.25	0.74
1.333	0.60	7.333	2.59	13.333	1.79	19.33	0.74
1.417	0.61	7.417	2.87	13.417	1.72	19.42	0.73
1.500	0.61	7.500	2.87	13.500	1.72	19.50	0.73
1.583	0.62	7.583	3.23	13.583	1.65	19.58	0.72
1.667	0.62	7.667	3.23	13.667	1.65	19.67	0.72
1.750	0.63	7.750	3.69	13.750	1.59	19.75	0.71
1.833	0.63	7.833	3.69	13.833	1.59	19.83	0.71
1.917	0.65	7.917	4.30	13.917	1.54	19.92	0.69
2.000	0.65	8.000	4.30	14.000	1.54	20.00	0.69
2.083	0.66	8.083	5.16	14.083	1.48	20.08	0.68
2.167	0.66	8.167	5.16	14.167	1.48	20.17	0.68
2.250	0.68	8.250	6.42	14.250	1.44	20.25	0.68
2.333	0.68	8.333	6.42	14.333	1.44	20.33	0.68
2.417	0.70	8.417	8.44	14.417	1.39	20.42	0.67
2.500	0.70	8.500	8.44	14.500	1.39	20.50	0.67
2.583	0.71	8.583	12.12	14.583	1.35	20.58	0.66
2.667	0.71	8.667	12.12	14.667	1.35	20.67	0.66
2.750	0.73	8.750	20.49	14.750	1.31	20.75	0.65
2.833	0.73	8.833	20.49	14.833	1.31	20.83	0.65
2.917	0.75	8.917	51.45	14.917	1.27	20.92	0.64
3.000	0.75	9.000	51.45	15.000	1.27	21.00	0.64
3.083	0.77	9.083	157.29	15.083	1.24	21.08	0.63
3.167	0.77	9.167	157.29	15.167	1.24	21.17	0.63
3.250	0.79	9.250	62.45	15.250	1.20	21.25	0.62
3.333	0.79	9.333	62.45	15.333	1.20	21.33	0.62
3.417	0.81	9.417	31.10	15.417	1.17	21.42	0.61
3.500	0.81	9.500	31.10	15.500	1.17	21.50	0.61
3.583	0.84	9.583	19.70	15.583	1.14	21.58	0.61
3.667	0.84	9.667	19.70	15.667	1.14	21.67	0.61
3.750	0.86	9.750	14.09	15.750	1.11	21.75	0.60
3.833	0.86	9.833	14.09	15.833	1.11	21.83	0.60
3.917	0.89	9.917	10.83	15.917	1.09	21.92	0.59
4.000	0.89	10.000	10.83	16.000	1.09	22.00	0.59
4.083	0.92	10.083	8.74	16.083	1.06	22.08	0.58
4.167	0.92	10.167	8.74	16.167	1.06	22.17	0.58
4.250	0.95	10.250	7.30	16.250	1.04	22.25	0.58
4.333	0.95	10.333	7.30	16.333	1.04	22.33	0.58
4.417	0.98	10.417	6.25	16.417	1.01	22.42	0.57
4.500	0.98	10.500	6.25	16.500	1.01	22.50	0.57

4.583	1.02	10.583	5.46	16.583	0.99	22.58	0.56
4.667	1.02	10.667	5.46	16.667	0.99	22.67	0.56
4.750	1.06	10.750	4.84	16.750	0.97	22.75	0.56
4.833	1.06	10.833	4.84	16.833	0.97	22.83	0.56
4.917	1.10	10.917	4.35	16.917	0.95	22.92	0.55
5.000	1.10	11.000	4.35	17.000	0.95	23.00	0.55
5.083	1.15	11.083	3.94	17.083	0.93	23.08	0.55
5.167	1.15	11.167	3.94	17.167	0.93	23.17	0.55
5.250	1.20	11.250	3.61	17.250	0.91	23.25	0.54
5.333	1.20	11.333	3.61	17.333	0.91	23.33	0.54
5.417	1.25	11.417	3.32	17.417	0.89	23.42	0.53
5.500	1.25	11.500	3.32	17.500	0.89	23.50	0.53
5.583	1.31	11.583	3.08	17.583	0.88	23.58	0.53
5.667	1.31	11.667	3.08	17.667	0.88	23.67	0.53
5.750	1.38	11.750	2.87	17.750	0.86	23.75	0.52
5.833	1.38	11.833	2.87	17.833	0.86	23.83	0.52
5.917	1.45	11.917	2.69	17.917	0.85	23.92	0.52
6.000	1.45	12.000	2.69	18.000	0.85	24.00	0.52

			TOTALS
Max.Eff.Inten.(mm/hr)=	157.29	150.38	
over (min)	5.00	5.00	
Storage Coeff. (min)=	1.34 (ii)	4.69 (ii)	
Unit Hyd. Tpeak (min)=	5.00	5.00	
Unit Hyd. peak (cms)=	0.33	0.22	
PEAK FLOW (cms)=	0.11	0.02	0.133 (iii)
TIME TO PEAK (hrs)=	9.17	9.17	9.17
RUNOFF VOLUME (mm)=	97.20	75.72	92.47
TOTAL RAINFALL (mm)=	98.20	98.20	98.20
RUNOFF COEFFICIENT =	0.99	0.77	0.94

***** WARNING: STORAGE COEFF. IS SMALLER THAN TIME STEP!

(i) CN PROCEDURE SELECTED FOR PERVIOUS LOSSES:
CN* = 89.0 Ia = Dep. Storage (Above)
(ii) TIME STEP (DT) SHOULD BE SMALLER OR EQUAL
THAN THE STORAGE COEFFICIENT.
(iii) PEAK FLOW DOES NOT INCLUDE BASEFLOW IF ANY.

ADD HYD (0004)				
1 + 2 = 3	AREA (ha)	QPEAK (cms)	TPEAK (hrs)	R.V. (mm)
ID1= 1 (1201):	0.32	0.133	9.17	92.47
+ ID2= 2 (13000):	104.59	6.863	9.33	57.11
ID = 3 (0004):	104.91	6.919	9.33	57.22

NOTE: PEAK FLOWS DO NOT INCLUDE BASEFLOWS IF ANY.

ROUTE CHN(12001)
IN= 2---> OUT= 1 | Routing time step (min)'= 5.00

<------ DATA FOR SECTION (1.1) ------>

Distance	Elevation	Manning	
0.00	0.15	0.0110	
0.01	0.00	0.0110 /0.0110	Main Channel
4.26	0.02	0.0110	Main Channel
8.51	0.00	0.0110 /0.0110	Main Channel
8.52	0.15	0.0110	

<-------------------- TRAVEL TIME TABLE ---------------------->

DEPTH (m)	ELEV (m)	VOLUME (cu.m.)	FLOW RATE (cms)	VELOCITY (m/s)	TRAV.TIME (min)
0.01	0.01	.939E+00	0.0	0.16	7.82
0.02	0.02	.375E+01	0.0	0.25	4.92
0.02	0.02	.836E+01	0.0	0.36	3.52
0.03	0.03	.134E+02	0.1	0.49	2.57
0.04	0.04	.185E+02	0.1	0.60	2.08
0.05	0.05	.235E+02	0.2	0.71	1.77
0.06	0.06	.286E+02	0.3	0.81	1.55
0.06	0.06	.336E+02	0.4	0.90	1.39
0.07	0.07	.387E+02	0.5	0.99	1.27
0.08	0.08	.438E+02	0.6	1.07	1.17
0.09	0.09	.488E+02	0.7	1.15	1.09
0.09	0.09	.539E+02	0.9	1.23	1.02
0.10	0.10	.589E+02	1.0	1.31	0.96
0.11	0.11	.640E+02	1.2	1.38	0.91
0.12	0.12	.691E+02	1.3	1.45	0.86
0.13	0.13	.741E+02	1.5	1.52	0.82
0.13	0.13	.792E+02	1.7	1.59	0.79
0.14	0.14	.843E+02	1.9	1.66	0.76
0.15	0.15	.893E+02	2.0	1.73	0.73

**** WARNING: TRAVEL TIME TABLE EXCEEDED

	AREA (ha)	<---- hydrograph ----> QPEAK (cms)	TPEAK (hrs)	R.V. (mm)	<-pipe / channel-> MAX DEPTH (m)	MAX VEL (m/s)
INFLOW : ID= 2 (0004)	104.91	6.92	9.33	57.22	0.15	1.69
OUTFLOW: ID= 1 (12001)	104.91	6.93	9.33	57.22	0.15	1.72

CALIB STANDHYD (1200) ID= 1 DT= 5.0 min	Area (ha)= 0.24 Total Imp(%)= 88.00 Dir. Conn.(%)= 39.00

		IMPERVIOUS	PERVIOUS (i)
Surface Area	(ha)=	0.21	0.03
Dep. Storage	(mm)=	1.00	1.50
Average Slope	(%)=	1.00	2.00
Length	(m)=	40.00	40.00
Mannings n	=	0.013	0.250

NOTE: RAINFALL WAS TRANSFORMED TO 5.0 MIN. TIME STEP.

---- TRANSFORMED HYETOGRAPH ----

TIME hrs	RAIN mm/hr	TIME hrs	RAIN mm/hr	TIME hrs	RAIN mm/hr	TIME hrs	RAIN mm/hr
0.083	0.52	6.083	1.53	12.083	2.53	18.08	0.83
0.167	0.52	6.167	1.53	12.167	2.53	18.17	0.83
0.250	0.53	6.250	1.63	12.250	2.39	18.25	0.82
0.333	0.53	6.333	1.63	12.333	2.39	18.33	0.82
0.417	0.54	6.417	1.73	12.417	2.26	18.42	0.80
0.500	0.54	6.500	1.73	12.500	2.26	18.50	0.80
0.583	0.55	6.583	1.85	12.583	2.15	18.58	0.79
0.667	0.55	6.667	1.85	12.667	2.15	18.67	0.79
0.750	0.56	6.750	2.00	12.750	2.04	18.75	0.77
0.833	0.56	6.833	2.00	12.833	2.04	18.83	0.77
0.917	0.57	6.917	2.16	12.917	1.95	18.92	0.76
1.000	0.57	7.000	2.16	13.000	1.95	19.00	0.76
1.083	0.58	7.083	2.35	13.083	1.87	19.08	0.75

1.167	0.58	7.167	2.35	13.167	1.87	19.17	0.75
1.250	0.60	7.250	2.59	13.250	1.79	19.25	0.74
1.333	0.60	7.333	2.59	13.333	1.79	19.33	0.74
1.417	0.61	7.417	2.87	13.417	1.72	19.42	0.73
1.500	0.61	7.500	2.87	13.500	1.72	19.50	0.73
1.583	0.62	7.583	3.23	13.583	1.65	19.58	0.72
1.667	0.62	7.667	3.23	13.667	1.65	19.67	0.72
1.750	0.63	7.750	3.69	13.750	1.59	19.75	0.71
1.833	0.63	7.833	3.69	13.833	1.59	19.83	0.71
1.917	0.65	7.917	4.30	13.917	1.54	19.92	0.69
2.000	0.65	8.000	4.30	14.000	1.54	20.00	0.69
2.083	0.66	8.083	5.16	14.083	1.48	20.08	0.68
2.167	0.66	8.167	5.16	14.167	1.48	20.17	0.68
2.250	0.68	8.250	6.42	14.250	1.44	20.25	0.68
2.333	0.68	8.333	6.42	14.333	1.44	20.33	0.68
2.417	0.70	8.417	8.44	14.417	1.39	20.42	0.67
2.500	0.70	8.500	8.44	14.500	1.39	20.50	0.67
2.583	0.71	8.583	12.12	14.583	1.35	20.58	0.66
2.667	0.71	8.667	12.12	14.667	1.35	20.67	0.66
2.750	0.73	8.750	20.49	14.750	1.31	20.75	0.65
2.833	0.73	8.833	20.49	14.833	1.31	20.83	0.65
2.917	0.75	8.917	51.45	14.917	1.27	20.92	0.64
3.000	0.75	9.000	51.45	15.000	1.27	21.00	0.64
3.083	0.77	9.083	157.29	15.083	1.24	21.08	0.63
3.167	0.77	9.167	157.29	15.167	1.24	21.17	0.63
3.250	0.79	9.250	62.45	15.250	1.20	21.25	0.62
3.333	0.79	9.333	62.45	15.333	1.20	21.33	0.62
3.417	0.81	9.417	31.10	15.417	1.17	21.42	0.61
3.500	0.81	9.500	31.10	15.500	1.17	21.50	0.61
3.583	0.84	9.583	19.70	15.583	1.14	21.58	0.61
3.667	0.84	9.667	19.70	15.667	1.14	21.67	0.61
3.750	0.86	9.750	14.09	15.750	1.11	21.75	0.60
3.833	0.86	9.833	14.09	15.833	1.11	21.83	0.60
3.917	0.89	9.917	10.83	15.917	1.09	21.92	0.59
4.000	0.89	10.000	10.83	16.000	1.09	22.00	0.59
4.083	0.92	10.083	8.74	16.083	1.06	22.08	0.58
4.167	0.92	10.167	8.74	16.167	1.06	22.17	0.58
4.250	0.95	10.250	7.30	16.250	1.04	22.25	0.58
4.333	0.95	10.333	7.30	16.333	1.04	22.33	0.58
4.417	0.98	10.417	6.25	16.417	1.01	22.42	0.57
4.500	0.98	10.500	6.25	16.500	1.01	22.50	0.57
4.583	1.02	10.583	5.46	16.583	0.99	22.58	0.56
4.667	1.02	10.667	5.46	16.667	0.99	22.67	0.56
4.750	1.06	10.750	4.84	16.750	0.97	22.75	0.56
4.833	1.06	10.833	4.84	16.833	0.97	22.83	0.56
4.917	1.10	10.917	4.35	16.917	0.95	22.92	0.55
5.000	1.10	11.000	4.35	17.000	0.95	23.00	0.55
5.083	1.15	11.083	3.94	17.083	0.93	23.08	0.55
5.167	1.15	11.167	3.94	17.167	0.93	23.17	0.55
5.250	1.20	11.250	3.61	17.250	0.91	23.25	0.54
5.333	1.20	11.333	3.61	17.333	0.91	23.33	0.54
5.417	1.25	11.417	3.32	17.417	0.89	23.42	0.53
5.500	1.25	11.500	3.32	17.500	0.89	23.50	0.53
5.583	1.31	11.583	3.08	17.583	0.88	23.58	0.53
5.667	1.31	11.667	3.08	17.667	0.88	23.67	0.53
5.750	1.38	11.750	2.87	17.750	0.86	23.75	0.52
5.833	1.38	11.833	2.87	17.833	0.86	23.83	0.52
5.917	1.45	11.917	2.69	17.917	0.85	23.92	0.52
6.000	1.45	12.000	2.69	18.000	0.85	24.00	0.52

Max.Eff.Inten.(mm/hr)=	157.29	796.21
over (min)	5.00	5.00
Storage Coeff. (min)=	1.23 (ii)	4.90 (ii)
Unit Hyd. Tpeak (min)=	5.00	5.00

Unit Hyd. peak (cms)=	0.33	0.22		
			TOTALS	
PEAK FLOW (cms)=	0.04	0.06	0.099 (iii)	
TIME TO PEAK (hrs)=	9.17	9.17	9.17	
RUNOFF VOLUME (mm)=	97.20	95.34	96.05	
TOTAL RAINFALL (mm)=	98.20	98.20	98.20	
RUNOFF COEFFICIENT =	0.99	0.97	0.98	

***** WARNING: STORAGE COEFF. IS SMALLER THAN TIME STEP!

(i) CN PROCEDURE SELECTED FOR PERVIOUS LOSSES:
CN* = 95.0 Ia = Dep. Storage (Above)
(ii) TIME STEP (DT) SHOULD BE SMALLER OR EQUAL
THAN THE STORAGE COEFFICIENT.
(iii) PEAK FLOW DOES NOT INCLUDE BASEFLOW IF ANY.

ADD HYD (12000)
1 + 2 = 3

	AREA (ha)	QPEAK (cms)	TPEAK (hrs)	R.V. (mm)
ID1= 1 (1200):	0.24	0.099	9.17	96.05
+ ID2= 2 (12001):	104.91	6.929	9.33	57.22
ID = 3 (12000):	105.15	6.975	9.33	57.31

NOTE: PEAK FLOWS DO NOT INCLUDE BASEFLOWS IF ANY.

CALIB
STANDHYD (1101)
ID= 1 DT= 5.0 min

Area (ha)= 0.19
Total Imp(%)= 84.00 Dir. Conn.(%)= 83.00

		IMPERVIOUS	PERVIOUS (i)
Surface Area	(ha)=	0.16	0.03
Dep. Storage	(mm)=	1.00	1.50
Average Slope	(%)=	1.00	2.00
Length	(m)=	35.59	40.00
Mannings n	=	0.013	0.250

NOTE: RAINFALL WAS TRANSFORMED TO 5.0 MIN. TIME STEP.

---- TRANSFORMED HYETOGRAPH ----

TIME hrs	RAIN mm/hr	TIME hrs	RAIN mm/hr	TIME hrs	RAIN mm/hr	TIME hrs	RAIN mm/hr
0.083	0.52	6.083	1.53	12.083	2.53	18.08	0.83
0.167	0.52	6.167	1.53	12.167	2.53	18.17	0.83
0.250	0.53	6.250	1.63	12.250	2.39	18.25	0.82
0.333	0.53	6.333	1.63	12.333	2.39	18.33	0.82
0.417	0.54	6.417	1.73	12.417	2.26	18.42	0.80
0.500	0.54	6.500	1.73	12.500	2.26	18.50	0.80
0.583	0.55	6.583	1.85	12.583	2.15	18.58	0.79
0.667	0.55	6.667	1.85	12.667	2.15	18.67	0.79
0.750	0.56	6.750	2.00	12.750	2.04	18.75	0.77
0.833	0.56	6.833	2.00	12.833	2.04	18.83	0.77
0.917	0.57	6.917	2.16	12.917	1.95	18.92	0.76
1.000	0.57	7.000	2.16	13.000	1.95	19.00	0.76
1.083	0.58	7.083	2.35	13.083	1.87	19.08	0.75
1.167	0.58	7.167	2.35	13.167	1.87	19.17	0.75
1.250	0.60	7.250	2.59	13.250	1.79	19.25	0.74
1.333	0.60	7.333	2.59	13.333	1.79	19.33	0.74
1.417	0.61	7.417	2.87	13.417	1.72	19.42	0.73

1.500	0.61	7.500	2.87	13.500	1.72	19.50	0.73
1.583	0.62	7.583	3.23	13.583	1.65	19.58	0.72
1.667	0.62	7.667	3.23	13.667	1.65	19.67	0.72
1.750	0.63	7.750	3.69	13.750	1.59	19.75	0.71
1.833	0.63	7.833	3.69	13.833	1.59	19.83	0.71
1.917	0.65	7.917	4.30	13.917	1.54	19.92	0.69
2.000	0.65	8.000	4.30	14.000	1.54	20.00	0.69
2.083	0.66	8.083	5.16	14.083	1.48	20.08	0.68
2.167	0.66	8.167	5.16	14.167	1.48	20.17	0.68
2.250	0.68	8.250	6.42	14.250	1.44	20.25	0.68
2.333	0.68	8.333	6.42	14.333	1.44	20.33	0.68
2.417	0.70	8.417	8.44	14.417	1.39	20.42	0.67
2.500	0.70	8.500	8.44	14.500	1.39	20.50	0.67
2.583	0.71	8.583	12.12	14.583	1.35	20.58	0.66
2.667	0.71	8.667	12.12	14.667	1.35	20.67	0.66
2.750	0.73	8.750	20.49	14.750	1.31	20.75	0.65
2.833	0.73	8.833	20.49	14.833	1.31	20.83	0.65
2.917	0.75	8.917	51.45	14.917	1.27	20.92	0.64
3.000	0.75	9.000	51.45	15.000	1.27	21.00	0.64
3.083	0.77	9.083	157.29	15.083	1.24	21.08	0.63
3.167	0.77	9.167	157.29	15.167	1.24	21.17	0.63
3.250	0.79	9.250	62.45	15.250	1.20	21.25	0.62
3.333	0.79	9.333	62.45	15.333	1.20	21.33	0.62
3.417	0.81	9.417	31.10	15.417	1.17	21.42	0.61
3.500	0.81	9.500	31.10	15.500	1.17	21.50	0.61
3.583	0.84	9.583	19.70	15.583	1.14	21.58	0.61
3.667	0.84	9.667	19.70	15.667	1.14	21.67	0.61
3.750	0.86	9.750	14.09	15.750	1.11	21.75	0.60
3.833	0.86	9.833	14.09	15.833	1.11	21.83	0.60
3.917	0.89	9.917	10.83	15.917	1.09	21.92	0.59
4.000	0.89	10.000	10.83	16.000	1.09	22.00	0.59
4.083	0.92	10.083	8.74	16.083	1.06	22.08	0.58
4.167	0.92	10.167	8.74	16.167	1.06	22.17	0.58
4.250	0.95	10.250	7.30	16.250	1.04	22.25	0.58
4.333	0.95	10.333	7.30	16.333	1.04	22.33	0.58
4.417	0.98	10.417	6.25	16.417	1.01	22.42	0.57
4.500	0.98	10.500	6.25	16.500	1.01	22.50	0.57
4.583	1.02	10.583	5.46	16.583	0.99	22.58	0.56
4.667	1.02	10.667	5.46	16.667	0.99	22.67	0.56
4.750	1.06	10.750	4.84	16.750	0.97	22.75	0.56
4.833	1.06	10.833	4.84	16.833	0.97	22.83	0.56
4.917	1.10	10.917	4.35	16.917	0.95	22.92	0.55
5.000	1.10	11.000	4.35	17.000	0.95	23.00	0.55
5.083	1.15	11.083	3.94	17.083	0.93	23.08	0.55
5.167	1.15	11.167	3.94	17.167	0.93	23.17	0.55
5.250	1.20	11.250	3.61	17.250	0.91	23.25	0.54
5.333	1.20	11.333	3.61	17.333	0.91	23.33	0.54
5.417	1.25	11.417	3.32	17.417	0.89	23.42	0.53
5.500	1.25	11.500	3.32	17.500	0.89	23.50	0.53
5.583	1.31	11.583	3.08	17.583	0.88	23.58	0.53
5.667	1.31	11.667	3.08	17.667	0.88	23.67	0.53
5.750	1.38	11.750	2.87	17.750	0.86	23.75	0.52
5.833	1.38	11.833	2.87	17.833	0.86	23.83	0.52
5.917	1.45	11.917	2.69	17.917	0.85	23.92	0.52
6.000	1.45	12.000	2.69	18.000	0.85	24.00	0.52

Max.Eff.Inten.(mm/hr)=	157.29	145.91	
over (min)	5.00	5.00	
Storage Coeff. (min)=	1.15 (ii)	4.19 (ii)	
Unit Hyd. Tpeak (min)=	5.00	5.00	
Unit Hyd. peak (cms)=	0.34	0.24	
			TOTALS
PEAK FLOW (cms)=	0.07	0.01	0.081 (iii)
TIME TO PEAK (hrs)=	9.17	9.17	9.17

```
     RUNOFF VOLUME    (mm)=      97.20        79.67          94.21
     TOTAL RAINFALL   (mm)=      98.20        98.20          98.20
     RUNOFF COEFFICIENT   =       0.99         0.81           0.96

***** WARNING: STORAGE COEFF. IS SMALLER THAN TIME STEP!

       (i) CN PROCEDURE SELECTED FOR PERVIOUS LOSSES:
            CN*  =  92.0    Ia = Dep. Storage  (Above)
      (ii) TIME STEP (DT) SHOULD BE SMALLER OR EQUAL
           THAN THE STORAGE COEFFICIENT.
     (iii) PEAK FLOW DOES NOT INCLUDE BASEFLOW IF ANY.

--------------------------------------------------------------------------------


--------------------
| ADD HYD  (  0003)|
|   1 +  2 =  3    |          AREA    QPEAK    TPEAK     R.V.
--------------------          (ha)    (cms)    (hrs)     (mm)
        ID1= 1 (  1101):      0.19   0.081     9.17    94.21
      + ID2= 2 ( 12000):    105.15   6.975     9.33    57.31
        ==========================================================
        ID = 3 (  0003):    105.34   7.008     9.33    57.37

     NOTE:  PEAK FLOWS DO NOT INCLUDE BASEFLOWS IF ANY.
--------------------------------------------------------------------------------
--------------------
| ROUTE CHN( 11001)|
| IN= 2---> OUT= 1 |     Routing time step (min)'=  5.00
--------------------
               <------ DATA FOR SECTION (   1.1) ------>
               Distance      Elevation       Manning
                   0.00          0.15         0.0110
                   0.01          0.00    0.0110 /0.0110  Main Channel
                   4.26          0.02         0.0110      Main Channel
                   8.51          0.00    0.0110 /0.0110  Main Channel
                   8.52          0.15         0.0110

      <---------------------- TRAVEL TIME TABLE ---------------------->
       DEPTH     ELEV       VOLUME     FLOW RATE     VELOCITY   TRAV.TIME
        (m)       (m)      (cu.m.)       (cms)         (m/s)      (min)
       0.01      0.01     .217E+00        0.0          0.16        1.81
       0.02      0.02     .868E+00        0.0          0.25        1.14
       0.02      0.02     .193E+01        0.0          0.36        0.81
       0.03      0.03     .310E+01        0.1          0.49        0.59
       0.04      0.04     .427E+01        0.1          0.60        0.48
       0.05      0.05     .543E+01        0.2          0.71        0.41
       0.06      0.06     .661E+01        0.3          0.81        0.36
       0.06      0.06     .777E+01        0.4          0.90        0.32
       0.07      0.07     .894E+01        0.5          0.99        0.29
       0.08      0.08     .101E+02        0.6          1.07        0.27
       0.09      0.09     .113E+02        0.7          1.15        0.25
       0.09      0.09     .125E+02        0.9          1.23        0.24
       0.10      0.10     .136E+02        1.0          1.31        0.22
       0.11      0.11     .148E+02        1.2          1.38        0.21
       0.12      0.12     .160E+02        1.3          1.45        0.20
       0.13      0.13     .171E+02        1.5          1.52        0.19
       0.13      0.13     .183E+02        1.7          1.59        0.18
       0.14      0.14     .195E+02        1.9          1.66        0.17
       0.15      0.15     .206E+02        2.0          1.73        0.17

     **** WARNING:  TRAVEL TIME TABLE EXCEEDED
                                      <---- hydrograph ---->   <-pipe / channel->
                                AREA    QPEAK   TPEAK   R.V.   MAX DEPTH  MAX VEL
                                (ha)    (cms)   (hrs)   (mm)      (m)      (m/s)
```

INFLOW : ID= 2 (0003)	105.34	7.01	9.33	57.37	0.15	1.72
OUTFLOW: ID= 1 (11001)	105.34	7.01	9.33	57.37	0.15	1.73

CALIB STANDHYD (1100) ID= 1 DT= 5.0 min	Area (ha)= 0.05 Total Imp(%)= 88.00 Dir. Conn.(%)= 88.00

		IMPERVIOUS	PERVIOUS (i)
Surface Area	(ha)=	0.04	0.01
Dep. Storage	(mm)=	1.00	1.50
Average Slope	(%)=	1.00	2.00
Length	(m)=	18.26	40.00
Mannings n	=	0.013	0.250

NOTE: RAINFALL WAS TRANSFORMED TO 5.0 MIN. TIME STEP.

---- TRANSFORMED HYETOGRAPH ----

TIME hrs	RAIN mm/hr	TIME hrs	RAIN mm/hr	TIME hrs	RAIN mm/hr	TIME hrs	RAIN mm/hr
0.083	0.52	6.083	1.53	12.083	2.53	18.08	0.83
0.167	0.52	6.167	1.53	12.167	2.53	18.17	0.83
0.250	0.53	6.250	1.63	12.250	2.39	18.25	0.82
0.333	0.53	6.333	1.63	12.333	2.39	18.33	0.82
0.417	0.54	6.417	1.73	12.417	2.26	18.42	0.80
0.500	0.54	6.500	1.73	12.500	2.26	18.50	0.80
0.583	0.55	6.583	1.85	12.583	2.15	18.58	0.79
0.667	0.55	6.667	1.85	12.667	2.15	18.67	0.79
0.750	0.56	6.750	2.00	12.750	2.04	18.75	0.77
0.833	0.56	6.833	2.00	12.833	2.04	18.83	0.77
0.917	0.57	6.917	2.16	12.917	1.95	18.92	0.76
1.000	0.57	7.000	2.16	13.000	1.95	19.00	0.76
1.083	0.58	7.083	2.35	13.083	1.87	19.08	0.75
1.167	0.58	7.167	2.35	13.167	1.87	19.17	0.75
1.250	0.60	7.250	2.59	13.250	1.79	19.25	0.74
1.333	0.60	7.333	2.59	13.333	1.79	19.33	0.74
1.417	0.61	7.417	2.87	13.417	1.72	19.42	0.73
1.500	0.61	7.500	2.87	13.500	1.72	19.50	0.73
1.583	0.62	7.583	3.23	13.583	1.65	19.58	0.72
1.667	0.62	7.667	3.23	13.667	1.65	19.67	0.72
1.750	0.63	7.750	3.69	13.750	1.59	19.75	0.71
1.833	0.63	7.833	3.69	13.833	1.59	19.83	0.71
1.917	0.65	7.917	4.30	13.917	1.54	19.92	0.69
2.000	0.65	8.000	4.30	14.000	1.54	20.00	0.69
2.083	0.66	8.083	5.16	14.083	1.48	20.08	0.68
2.167	0.66	8.167	5.16	14.167	1.48	20.17	0.68
2.250	0.68	8.250	6.42	14.250	1.44	20.25	0.68
2.333	0.68	8.333	6.42	14.333	1.44	20.33	0.68
2.417	0.70	8.417	8.44	14.417	1.39	20.42	0.67
2.500	0.70	8.500	8.44	14.500	1.39	20.50	0.67
2.583	0.71	8.583	12.12	14.583	1.35	20.58	0.66
2.667	0.71	8.667	12.12	14.667	1.35	20.67	0.66
2.750	0.73	8.750	20.49	14.750	1.31	20.75	0.65
2.833	0.73	8.833	20.49	14.833	1.31	20.83	0.65
2.917	0.75	8.917	51.45	14.917	1.27	20.92	0.64
3.000	0.75	9.000	51.45	15.000	1.27	21.00	0.64
3.083	0.77	9.083	157.29	15.083	1.24	21.08	0.63
3.167	0.77	9.167	157.29	15.167	1.24	21.17	0.63
3.250	0.79	9.250	62.45	15.250	1.20	21.25	0.62
3.333	0.79	9.333	62.45	15.333	1.20	21.33	0.62

3.417	0.81	9.417	31.10	15.417	1.17	21.42	0.61
3.500	0.81	9.500	31.10	15.500	1.17	21.50	0.61
3.583	0.84	9.583	19.70	15.583	1.14	21.58	0.61
3.667	0.84	9.667	19.70	15.667	1.14	21.67	0.61
3.750	0.86	9.750	14.09	15.750	1.11	21.75	0.60
3.833	0.86	9.833	14.09	15.833	1.11	21.83	0.60
3.917	0.89	9.917	10.83	15.917	1.09	21.92	0.59
4.000	0.89	10.000	10.83	16.000	1.09	22.00	0.59
4.083	0.92	10.083	8.74	16.083	1.06	22.08	0.58
4.167	0.92	10.167	8.74	16.167	1.06	22.17	0.58
4.250	0.95	10.250	7.30	16.250	1.04	22.25	0.58
4.333	0.95	10.333	7.30	16.333	1.04	22.33	0.58
4.417	0.98	10.417	6.25	16.417	1.01	22.42	0.57
4.500	0.98	10.500	6.25	16.500	1.01	22.50	0.57
4.583	1.02	10.583	5.46	16.583	0.99	22.58	0.56
4.667	1.02	10.667	5.46	16.667	0.99	22.67	0.56
4.750	1.06	10.750	4.84	16.750	0.97	22.75	0.56
4.833	1.06	10.833	4.84	16.833	0.97	22.83	0.56
4.917	1.10	10.917	4.35	16.917	0.95	22.92	0.55
5.000	1.10	11.000	4.35	17.000	0.95	23.00	0.55
5.083	1.15	11.083	3.94	17.083	0.93	23.08	0.55
5.167	1.15	11.167	3.94	17.167	0.93	23.17	0.55
5.250	1.20	11.250	3.61	17.250	0.91	23.25	0.54
5.333	1.20	11.333	3.61	17.333	0.91	23.33	0.54
5.417	1.25	11.417	3.32	17.417	0.89	23.42	0.53
5.500	1.25	11.500	3.32	17.500	0.89	23.50	0.53
5.583	1.31	11.583	3.08	17.583	0.88	23.58	0.53
5.667	1.31	11.667	3.08	17.667	0.88	23.67	0.53
5.750	1.38	11.750	2.87	17.750	0.86	23.75	0.52
5.833	1.38	11.833	2.87	17.833	0.86	23.83	0.52
5.917	1.45	11.917	2.69	17.917	0.85	23.92	0.52
6.000	1.45	12.000	2.69	18.000	0.85	24.00	0.52

Max.Eff.Inten.(mm/hr)=	157.29	146.32		
over (min)	5.00	5.00		
Storage Coeff. (min)=	0.77 (ii)	3.42 (ii)		
Unit Hyd. Tpeak (min)=	5.00	5.00		
Unit Hyd. peak (cms)=	0.34	0.26		
			TOTALS	
PEAK FLOW (cms)=	0.02	0.00	0.022 (iii)	
TIME TO PEAK (hrs)=	9.17	9.17	9.17	
RUNOFF VOLUME (mm)=	97.20	84.95	93.01	
TOTAL RAINFALL (mm)=	98.20	98.20	98.20	
RUNOFF COEFFICIENT =	0.99	0.87	0.95	

***** WARNING: STORAGE COEFF. IS SMALLER THAN TIME STEP!

(i) CN PROCEDURE SELECTED FOR PERVIOUS LOSSES:
CN* = 95.0 Ia = Dep. Storage (Above)
(ii) TIME STEP (DT) SHOULD BE SMALLER OR EQUAL
THAN THE STORAGE COEFFICIENT.
(iii) PEAK FLOW DOES NOT INCLUDE BASEFLOW IF ANY.

ADD HYD (11000)				
1 + 2 = 3	AREA (ha)	QPEAK (cms)	TPEAK (hrs)	R.V. (mm)
ID1= 1 (1100):	0.05	0.022	9.17	93.01
+ ID2= 2 (11001):	105.34	7.010	9.33	57.37
ID = 3 (11000):	105.39	7.018	9.33	57.39

NOTE: PEAK FLOWS DO NOT INCLUDE BASEFLOWS IF ANY.

CALIB	
STANDHYD (1001)	Area (ha)= 9.07
ID= 1 DT= 5.0 min	Total Imp(%)= 75.00 Dir. Conn.(%)= 54.00

		IMPERVIOUS	PERVIOUS (i)
Surface Area	(ha)=	6.80	2.27
Dep. Storage	(mm)=	1.00	1.50
Average Slope	(%)=	1.00	2.00
Length	(m)=	245.90	40.00
Mannings n	=	0.013	0.250

NOTE: RAINFALL WAS TRANSFORMED TO 5.0 MIN. TIME STEP.

---- TRANSFORMED HYETOGRAPH ----

TIME hrs	RAIN mm/hr	TIME hrs	RAIN mm/hr	TIME hrs	RAIN mm/hr	TIME hrs	RAIN mm/hr
0.083	0.52	6.083	1.53	12.083	2.53	18.08	0.83
0.167	0.52	6.167	1.53	12.167	2.53	18.17	0.83
0.250	0.53	6.250	1.63	12.250	2.39	18.25	0.82
0.333	0.53	6.333	1.63	12.333	2.39	18.33	0.82
0.417	0.54	6.417	1.73	12.417	2.26	18.42	0.80
0.500	0.54	6.500	1.73	12.500	2.26	18.50	0.80
0.583	0.55	6.583	1.85	12.583	2.15	18.58	0.79
0.667	0.55	6.667	1.85	12.667	2.15	18.67	0.79
0.750	0.56	6.750	2.00	12.750	2.04	18.75	0.77
0.833	0.56	6.833	2.00	12.833	2.04	18.83	0.77
0.917	0.57	6.917	2.16	12.917	1.95	18.92	0.76
1.000	0.57	7.000	2.16	13.000	1.95	19.00	0.76
1.083	0.58	7.083	2.35	13.083	1.87	19.08	0.75
1.167	0.58	7.167	2.35	13.167	1.87	19.17	0.75
1.250	0.60	7.250	2.59	13.250	1.79	19.25	0.74
1.333	0.60	7.333	2.59	13.333	1.79	19.33	0.74
1.417	0.61	7.417	2.87	13.417	1.72	19.42	0.73
1.500	0.61	7.500	2.87	13.500	1.72	19.50	0.73
1.583	0.62	7.583	3.23	13.583	1.65	19.58	0.72
1.667	0.62	7.667	3.23	13.667	1.65	19.67	0.72
1.750	0.63	7.750	3.69	13.750	1.59	19.75	0.71
1.833	0.63	7.833	3.69	13.833	1.59	19.83	0.71
1.917	0.65	7.917	4.30	13.917	1.54	19.92	0.69
2.000	0.65	8.000	4.30	14.000	1.54	20.00	0.69
2.083	0.66	8.083	5.16	14.083	1.48	20.08	0.68
2.167	0.66	8.167	5.16	14.167	1.48	20.17	0.68
2.250	0.68	8.250	6.42	14.250	1.44	20.25	0.68
2.333	0.68	8.333	6.42	14.333	1.44	20.33	0.68
2.417	0.70	8.417	8.44	14.417	1.39	20.42	0.67
2.500	0.70	8.500	8.44	14.500	1.39	20.50	0.67
2.583	0.71	8.583	12.12	14.583	1.35	20.58	0.66
2.667	0.71	8.667	12.12	14.667	1.35	20.67	0.66
2.750	0.73	8.750	20.49	14.750	1.31	20.75	0.65
2.833	0.73	8.833	20.49	14.833	1.31	20.83	0.65
2.917	0.75	8.917	51.45	14.917	1.27	20.92	0.64
3.000	0.75	9.000	51.45	15.000	1.27	21.00	0.64
3.083	0.77	9.083	157.29	15.083	1.24	21.08	0.63
3.167	0.77	9.167	157.29	15.167	1.24	21.17	0.63
3.250	0.79	9.250	62.45	15.250	1.20	21.25	0.62
3.333	0.79	9.333	62.45	15.333	1.20	21.33	0.62
3.417	0.81	9.417	31.10	15.417	1.17	21.42	0.61
3.500	0.81	9.500	31.10	15.500	1.17	21.50	0.61
3.583	0.84	9.583	19.70	15.583	1.14	21.58	0.61
3.667	0.84	9.667	19.70	15.667	1.14	21.67	0.61

3.750	0.86	9.750	14.09	15.750	1.11	21.75	0.60
3.833	0.86	9.833	14.09	15.833	1.11	21.83	0.60
3.917	0.89	9.917	10.83	15.917	1.09	21.92	0.59
4.000	0.89	10.000	10.83	16.000	1.09	22.00	0.59
4.083	0.92	10.083	8.74	16.083	1.06	22.08	0.58
4.167	0.92	10.167	8.74	16.167	1.06	22.17	0.58
4.250	0.95	10.250	7.30	16.250	1.04	22.25	0.58
4.333	0.95	10.333	7.30	16.333	1.04	22.33	0.58
4.417	0.98	10.417	6.25	16.417	1.01	22.42	0.57
4.500	0.98	10.500	6.25	16.500	1.01	22.50	0.57
4.583	1.02	10.583	5.46	16.583	0.99	22.58	0.56
4.667	1.02	10.667	5.46	16.667	0.99	22.67	0.56
4.750	1.06	10.750	4.84	16.750	0.97	22.75	0.56
4.833	1.06	10.833	4.84	16.833	0.97	22.83	0.56
4.917	1.10	10.917	4.35	16.917	0.95	22.92	0.55
5.000	1.10	11.000	4.35	17.000	0.95	23.00	0.55
5.083	1.15	11.083	3.94	17.083	0.93	23.08	0.55
5.167	1.15	11.167	3.94	17.167	0.93	23.17	0.55
5.250	1.20	11.250	3.61	17.250	0.91	23.25	0.54
5.333	1.20	11.333	3.61	17.333	0.91	23.33	0.54
5.417	1.25	11.417	3.32	17.417	0.89	23.42	0.53
5.500	1.25	11.500	3.32	17.500	0.89	23.50	0.53
5.583	1.31	11.583	3.08	17.583	0.88	23.58	0.53
5.667	1.31	11.667	3.08	17.667	0.88	23.67	0.53
5.750	1.38	11.750	2.87	17.750	0.86	23.75	0.52
5.833	1.38	11.833	2.87	17.833	0.86	23.83	0.52
5.917	1.45	11.917	2.69	17.917	0.85	23.92	0.52
6.000	1.45	12.000	2.69	18.000	0.85	24.00	0.52

Max.Eff.Inten.(mm/hr)=	157.29	249.73		
over (min)	5.00	10.00		
Storage Coeff. (min)=	3.66 (ii)	7.98 (ii)		
Unit Hyd. Tpeak (min)=	5.00	10.00		
Unit Hyd. peak (cms)=	0.25	0.13		
			TOTALS	
PEAK FLOW (cms)=	2.04	1.13	3.081 (iii)	
TIME TO PEAK (hrs)=	9.17	9.25	9.17	
RUNOFF VOLUME (mm)=	97.20	79.12	88.88	
TOTAL RAINFALL (mm)=	98.20	98.20	98.20	
RUNOFF COEFFICIENT =	0.99	0.81	0.91	

***** WARNING: STORAGE COEFF. IS SMALLER THAN TIME STEP!

(i) CN PROCEDURE SELECTED FOR PERVIOUS LOSSES:
CN* = 86.0 Ia = Dep. Storage (Above)
(ii) TIME STEP (DT) SHOULD BE SMALLER OR EQUAL
THAN THE STORAGE COEFFICIENT.
(iii) PEAK FLOW DOES NOT INCLUDE BASEFLOW IF ANY.

ADD HYD (0002)		AREA	QPEAK	TPEAK	R.V.
1 + 2 = 3		(ha)	(cms)	(hrs)	(mm)
	ID1= 1 (1001):	9.07	3.081	9.17	88.88
	+ ID2= 2 (11000):	105.39	7.018	9.33	57.39
	ID = 3 (0002):	114.46	8.859	9.33	59.89

NOTE: PEAK FLOWS DO NOT INCLUDE BASEFLOWS IF ANY.

ROUTE CHN(10001)

| IN= 2---> OUT= 1 | Routing time step (min)'= 5.00

<------ DATA FOR SECTION (1.1) ------>

Distance	Elevation	Manning	
0.00	0.15	0.0110	
0.01	0.00	0.0110 /0.0110	Main Channel
4.26	0.02	0.0110	Main Channel
8.51	0.00	0.0110 /0.0110	Main Channel
8.52	0.15	0.0110	

<---------- TRAVEL TIME TABLE ---------->

DEPTH (m)	ELEV (m)	VOLUME (cu.m.)	FLOW RATE (cms)	VELOCITY (m/s)	TRAV.TIME (min)
0.01	0.01	.757E+00	0.0	0.16	6.30
0.02	0.02	.303E+01	0.0	0.25	3.97
0.02	0.02	.674E+01	0.0	0.36	2.84
0.03	0.03	.108E+02	0.1	0.49	2.07
0.04	0.04	.149E+02	0.1	0.60	1.67
0.05	0.05	.190E+02	0.2	0.71	1.42
0.06	0.06	.230E+02	0.3	0.81	1.25
0.06	0.06	.271E+02	0.4	0.90	1.12
0.07	0.07	.312E+02	0.5	0.99	1.02
0.08	0.08	.353E+02	0.6	1.07	0.94
0.09	0.09	.394E+02	0.7	1.15	0.88
0.09	0.09	.434E+02	0.9	1.23	0.82
0.10	0.10	.475E+02	1.0	1.31	0.77
0.11	0.11	.516E+02	1.2	1.38	0.73
0.12	0.12	.557E+02	1.3	1.45	0.70
0.13	0.13	.598E+02	1.5	1.52	0.66
0.13	0.13	.638E+02	1.7	1.59	0.63
0.14	0.14	.679E+02	1.9	1.66	0.61
0.15	0.15	.720E+02	2.0	1.73	0.59

**** WARNING: TRAVEL TIME TABLE EXCEEDED

		<---- hydrograph ---->			<-pipe / channel->	
	AREA (ha)	QPEAK (cms)	TPEAK (hrs)	R.V. (mm)	MAX DEPTH (m)	MAX VEL (m/s)
INFLOW : ID= 2 (0002)	114.46	8.86	9.33	59.89	0.15	1.69
OUTFLOW: ID= 1 (10001)	114.46	8.84	9.33	59.89	0.14	1.66

CALIB
STANDHYD (1000)
ID= 1 DT= 5.0 min

Area (ha)= 0.14
Total Imp(%)= 87.00 Dir. Conn.(%)= 78.00

		IMPERVIOUS	PERVIOUS (i)
Surface Area	(ha)=	0.12	0.02
Dep. Storage	(mm)=	1.00	1.50
Average Slope	(%)=	1.00	2.00
Length	(m)=	30.55	40.00
Mannings n	=	0.013	0.250

NOTE: RAINFALL WAS TRANSFORMED TO 5.0 MIN. TIME STEP.

---- TRANSFORMED HYETOGRAPH ----

TIME hrs	RAIN mm/hr	TIME hrs	RAIN mm/hr	TIME hrs	RAIN mm/hr	TIME hrs	RAIN mm/hr
0.083	0.52	6.083	1.53	12.083	2.53	18.08	0.83
0.167	0.52	6.167	1.53	12.167	2.53	18.17	0.83
0.250	0.53	6.250	1.63	12.250	2.39	18.25	0.82

0.333	0.53	6.333	1.63	12.333	2.39	18.33	0.82
0.417	0.54	6.417	1.73	12.417	2.26	18.42	0.80
0.500	0.54	6.500	1.73	12.500	2.26	18.50	0.80
0.583	0.55	6.583	1.85	12.583	2.15	18.58	0.79
0.667	0.55	6.667	1.85	12.667	2.15	18.67	0.79
0.750	0.56	6.750	2.00	12.750	2.04	18.75	0.77
0.833	0.56	6.833	2.00	12.833	2.04	18.83	0.77
0.917	0.57	6.917	2.16	12.917	1.95	18.92	0.76
1.000	0.57	7.000	2.16	13.000	1.95	19.00	0.76
1.083	0.58	7.083	2.35	13.083	1.87	19.08	0.75
1.167	0.58	7.167	2.35	13.167	1.87	19.17	0.75
1.250	0.60	7.250	2.59	13.250	1.79	19.25	0.74
1.333	0.60	7.333	2.59	13.333	1.79	19.33	0.74
1.417	0.61	7.417	2.87	13.417	1.72	19.42	0.73
1.500	0.61	7.500	2.87	13.500	1.72	19.50	0.73
1.583	0.62	7.583	3.23	13.583	1.65	19.58	0.72
1.667	0.62	7.667	3.23	13.667	1.65	19.67	0.72
1.750	0.63	7.750	3.69	13.750	1.59	19.75	0.71
1.833	0.63	7.833	3.69	13.833	1.59	19.83	0.71
1.917	0.65	7.917	4.30	13.917	1.54	19.92	0.69
2.000	0.65	8.000	4.30	14.000	1.54	20.00	0.69
2.083	0.66	8.083	5.16	14.083	1.48	20.08	0.68
2.167	0.66	8.167	5.16	14.167	1.48	20.17	0.68
2.250	0.68	8.250	6.42	14.250	1.44	20.25	0.68
2.333	0.68	8.333	6.42	14.333	1.44	20.33	0.68
2.417	0.70	8.417	8.44	14.417	1.39	20.42	0.67
2.500	0.70	8.500	8.44	14.500	1.39	20.50	0.67
2.583	0.71	8.583	12.12	14.583	1.35	20.58	0.66
2.667	0.71	8.667	12.12	14.667	1.35	20.67	0.66
2.750	0.73	8.750	20.49	14.750	1.31	20.75	0.65
2.833	0.73	8.833	20.49	14.833	1.31	20.83	0.65
2.917	0.75	8.917	51.45	14.917	1.27	20.92	0.64
3.000	0.75	9.000	51.45	15.000	1.27	21.00	0.64
3.083	0.77	9.083	157.29	15.083	1.24	21.08	0.63
3.167	0.77	9.167	157.29	15.167	1.24	21.17	0.63
3.250	0.79	9.250	62.45	15.250	1.20	21.25	0.62
3.333	0.79	9.333	62.45	15.333	1.20	21.33	0.62
3.417	0.81	9.417	31.10	15.417	1.17	21.42	0.61
3.500	0.81	9.500	31.10	15.500	1.17	21.50	0.61
3.583	0.84	9.583	19.70	15.583	1.14	21.58	0.61
3.667	0.84	9.667	19.70	15.667	1.14	21.67	0.61
3.750	0.86	9.750	14.09	15.750	1.11	21.75	0.60
3.833	0.86	9.833	14.09	15.833	1.11	21.83	0.60
3.917	0.89	9.917	10.83	15.917	1.09	21.92	0.59
4.000	0.89	10.000	10.83	16.000	1.09	22.00	0.59
4.083	0.92	10.083	8.74	16.083	1.06	22.08	0.58
4.167	0.92	10.167	8.74	16.167	1.06	22.17	0.58
4.250	0.95	10.250	7.30	16.250	1.04	22.25	0.58
4.333	0.95	10.333	7.30	16.333	1.04	22.33	0.58
4.417	0.98	10.417	6.25	16.417	1.01	22.42	0.57
4.500	0.98	10.500	6.25	16.500	1.01	22.50	0.57
4.583	1.02	10.583	5.46	16.583	0.99	22.58	0.56
4.667	1.02	10.667	5.46	16.667	0.99	22.67	0.56
4.750	1.06	10.750	4.84	16.750	0.97	22.75	0.56
4.833	1.06	10.833	4.84	16.833	0.97	22.83	0.56
4.917	1.10	10.917	4.35	16.917	0.95	22.92	0.55
5.000	1.10	11.000	4.35	17.000	0.95	23.00	0.55
5.083	1.15	11.083	3.94	17.083	0.93	23.08	0.55
5.167	1.15	11.167	3.94	17.167	0.93	23.17	0.55
5.250	1.20	11.250	3.61	17.250	0.91	23.25	0.54
5.333	1.20	11.333	3.61	17.333	0.91	23.33	0.54
5.417	1.25	11.417	3.32	17.417	0.89	23.42	0.53
5.500	1.25	11.500	3.32	17.500	0.89	23.50	0.53
5.583	1.31	11.583	3.08	17.583	0.88	23.58	0.53

5.667	1.31	11.667	3.08	17.667	0.88	23.67	0.53
5.750	1.38	11.750	2.87	17.750	0.86	23.75	0.52
5.833	1.38	11.833	2.87	17.833	0.86	23.83	0.52
5.917	1.45	11.917	2.69	17.917	0.85	23.92	0.52
6.000	1.45	12.000	2.69	18.000	0.85	24.00	0.52

Max.Eff.Inten.(mm/hr)=	157.29	241.41	
over (min)	5.00	5.00	
Storage Coeff. (min)=	1.05 (ii)	3.92 (ii)	
Unit Hyd. Tpeak (min)=	5.00	5.00	
Unit Hyd. peak (cms)=	0.34	0.24	
			TOTALS
PEAK FLOW (cms)=	0.05	0.01	0.059 (iii)
TIME TO PEAK (hrs)=	9.17	9.17	9.17
RUNOFF VOLUME (mm)=	97.20	83.07	94.09
TOTAL RAINFALL (mm)=	98.20	98.20	98.20
RUNOFF COEFFICIENT =	0.99	0.85	0.96

***** WARNING: STORAGE COEFF. IS SMALLER THAN TIME STEP!

(i) CN PROCEDURE SELECTED FOR PERVIOUS LOSSES:
CN* = 90.0 Ia = Dep. Storage (Above)
(ii) TIME STEP (DT) SHOULD BE SMALLER OR EQUAL
THAN THE STORAGE COEFFICIENT.
(iii) PEAK FLOW DOES NOT INCLUDE BASEFLOW IF ANY.

ADD HYD (0001)				
1 + 2 = 3	AREA (ha)	QPEAK (cms)	TPEAK (hrs)	R.V. (mm)
ID1= 1 (1000):	0.14	0.059	9.17	94.09
+ ID2= 2 (10001):	114.46	8.837	9.33	59.89
ID = 3 (0001):	114.60	8.862	9.33	59.93

NOTE: PEAK FLOWS DO NOT INCLUDE BASEFLOWS IF ANY.

```
================================================================================
==========================

      V    V   I    SSSSS  U   U    A    L              (v 6.2.2015)
      V    V   I    SS     U   U   A A   L
       V  V    I     SS    U   U  AAAAA  L
       V  V    I      SS   U   U  A   A  L
        VV     I    SSSSS  UUUUU  A   A  LLLLL

       OOO   TTTTT  TTTTT  H   H  Y   Y  M   M   OOO    TM
      O   O    T      T    H   H   Y Y   MM MM  O   O
      O   O    T      T    H   H    Y    M   M  O   O
       OOO     T      T    H   H    Y    M   M   OOO
Developed and Distributed by Smart City Water Inc
Copyright 2007 - 2022 Smart City Water Inc
All rights reserved.


                  *****  D E T A I L E D   O U T P U T *****


  Input   filename: C:\Program Files (x86)\Visual OTTHYMO 6.2\VO2\voin.dat
  Output    filename:  C:\Users\rgood\AppData\Local\Civica\VH5\33ebb920-66ec-4fb5-
a62a-4a5f9948f25e\271f1254-9884-4422-b6e0-a272fc7f34ac\scenar
  Summary  filename:  C:\Users\rgood\AppData\Local\Civica\VH5\33ebb920-66ec-4fb5-
a62a-4a5f9948f25e\271f1254-9884-4422-b6e0-a272fc7f34ac\scenar


DATE: 10-26-2023                              TIME: 10:33:30

USER:



COMMENTS: ________________________________________________________________


--------------------------------------------------------------------------------
-------------------------
  ************************************************
  ** SIMULATION : Timmins 12h                    **
  ************************************************



--------------------
|    READ STORM    |    Filename: C:\Users\rgood\AppD
|                  |              ata\Local\Temp\
|                  |              1f467847-d11f-4fe7-8c94-987201742c19\800362db
| Ptotal=193.00 mm |    Comments: Timmins 12h
--------------------
                TIME    RAIN |  TIME    RAIN |'  TIME    RAIN |  TIME    RAIN
                 hrs   mm/hr |   hrs   mm/hr |'   hrs   mm/hr |   hrs   mm/hr
                0.00   15.00 |  4.00    5.00 |  8.00   23.00 | 12.00    0.00
                1.00   20.00 |  5.00   20.00 |  9.00   13.00 |
                2.00   10.00 |  6.00   43.00 | 10.00   13.00 |
                3.00    3.00 |  7.00   20.00 | 11.00    8.00 |

--------------------------------------------------------------------------------


--------------------
| CALIB            |
| NASHYD   (  2300)|   Area    (ha)=   0.23   Curve Number   (CN)= 47.0
|ID= 1 DT= 5.0 min |   Ia      (mm)=   5.00   # of Linear Res.(N)= 3.00
--------------------   U.H. Tp(hrs)=   0.29
```

NOTE: RAINFALL WAS TRANSFORMED TO 5.0 MIN. TIME STEP.

---- TRANSFORMED HYETOGRAPH ----

TIME hrs	RAIN mm/hr	TIME hrs	RAIN mm/hr	TIME hrs	RAIN mm/hr	TIME hrs	RAIN mm/hr
0.083	15.00	3.333	3.00	6.583	43.00	9.83	13.00
0.167	15.00	3.417	3.00	6.667	43.00	9.92	13.00
0.250	15.00	3.500	3.00	6.750	43.00	10.00	13.00
0.333	15.00	3.583	3.00	6.833	43.00	10.08	13.00
0.417	15.00	3.667	3.00	6.917	43.00	10.17	13.00
0.500	15.00	3.750	3.00	7.000	43.00	10.25	13.00
0.583	15.00	3.833	3.00	7.083	20.00	10.33	13.00
0.667	15.00	3.917	3.00	7.167	20.00	10.42	13.00
0.750	15.00	4.000	3.00	7.250	20.00	10.50	13.00
0.833	15.00	4.083	5.00	7.333	20.00	10.58	13.00
0.917	15.00	4.167	5.00	7.417	20.00	10.67	13.00
1.000	15.00	4.250	5.00	7.500	20.00	10.75	13.00
1.083	20.00	4.333	5.00	7.583	20.00	10.83	13.00
1.167	20.00	4.417	5.00	7.667	20.00	10.92	13.00
1.250	20.00	4.500	5.00	7.750	20.00	11.00	13.00
1.333	20.00	4.583	5.00	7.833	20.00	11.08	8.00
1.417	20.00	4.667	5.00	7.917	20.00	11.17	8.00
1.500	20.00	4.750	5.00	8.000	20.00	11.25	8.00
1.583	20.00	4.833	5.00	8.083	23.00	11.33	8.00
1.667	20.00	4.917	5.00	8.167	23.00	11.42	8.00
1.750	20.00	5.000	5.00	8.250	23.00	11.50	8.00
1.833	20.00	5.083	20.00	8.333	23.00	11.58	8.00
1.917	20.00	5.167	20.00	8.417	23.00	11.67	8.00
2.000	20.00	5.250	20.00	8.500	23.00	11.75	8.00
2.083	10.00	5.333	20.00	8.583	23.00	11.83	8.00
2.167	10.00	5.417	20.00	8.667	23.00	11.92	8.00
2.250	10.00	5.500	20.00	8.750	23.00	12.00	8.00
2.333	10.00	5.583	20.00	8.833	23.00	12.08	0.00
2.417	10.00	5.667	20.00	8.917	23.00	12.17	0.00
2.500	10.00	5.750	20.00	9.000	23.00	12.25	0.00
2.583	10.00	5.833	20.00	9.083	13.00	12.33	0.00
2.667	10.00	5.917	20.00	9.167	13.00	12.42	0.00
2.750	10.00	6.000	20.00	9.250	13.00	12.50	0.00
2.833	10.00	6.083	43.00	9.333	13.00	12.58	0.00
2.917	10.00	6.167	43.00	9.417	13.00	12.67	0.00
3.000	10.00	6.250	43.00	9.500	13.00	12.75	0.00
3.083	3.00	6.333	43.00	9.583	13.00	12.83	0.00
3.167	3.00	6.417	43.00	9.667	13.00	12.92	0.00
3.250	3.00	6.500	43.00	9.750	13.00	13.00	0.00

Unit Hyd Qpeak (cms)= 0.030

PEAK FLOW (cms)= 0.012 (i)
TIME TO PEAK (hrs)= 7.000
RUNOFF VOLUME (mm)= 74.462
TOTAL RAINFALL (mm)= 193.000
RUNOFF COEFFICIENT = 0.386

(i) PEAK FLOW DOES NOT INCLUDE BASEFLOW IF ANY.

CALIB STANDHYD (2202) ID= 1 DT= 5.0 min	Area (ha)= 0.16	Total Imp(%)= 83.00	Dir. Conn.(%)= 82.00

	IMPERVIOUS	PERVIOUS (i)

Surface Area	(ha)=	0.13	0.03
Dep. Storage	(mm)=	1.00	1.50
Average Slope	(%)=	1.00	2.00
Length	(m)=	32.66	40.00
Mannings n	=	0.013	0.250

NOTE: RAINFALL WAS TRANSFORMED TO 5.0 MIN. TIME STEP.

---- TRANSFORMED HYETOGRAPH ----

TIME hrs	RAIN mm/hr	TIME hrs	RAIN mm/hr	TIME hrs	RAIN mm/hr	TIME hrs	RAIN mm/hr
0.083	15.00	3.333	3.00	6.583	43.00	9.83	13.00
0.167	15.00	3.417	3.00	6.667	43.00	9.92	13.00
0.250	15.00	3.500	3.00	6.750	43.00	10.00	13.00
0.333	15.00	3.583	3.00	6.833	43.00	10.08	13.00
0.417	15.00	3.667	3.00	6.917	43.00	10.17	13.00
0.500	15.00	3.750	3.00	7.000	43.00	10.25	13.00
0.583	15.00	3.833	3.00	7.083	20.00	10.33	13.00
0.667	15.00	3.917	3.00	7.167	20.00	10.42	13.00
0.750	15.00	4.000	3.00	7.250	20.00	10.50	13.00
0.833	15.00	4.083	5.00	7.333	20.00	10.58	13.00
0.917	15.00	4.167	5.00	7.417	20.00	10.67	13.00
1.000	15.00	4.250	5.00	7.500	20.00	10.75	13.00
1.083	20.00	4.333	5.00	7.583	20.00	10.83	13.00
1.167	20.00	4.417	5.00	7.667	20.00	10.92	13.00
1.250	20.00	4.500	5.00	7.750	20.00	11.00	13.00
1.333	20.00	4.583	5.00	7.833	20.00	11.08	8.00
1.417	20.00	4.667	5.00	7.917	20.00	11.17	8.00
1.500	20.00	4.750	5.00	8.000	20.00	11.25	8.00
1.583	20.00	4.833	5.00	8.083	23.00	11.33	8.00
1.667	20.00	4.917	5.00	8.167	23.00	11.42	8.00
1.750	20.00	5.000	5.00	8.250	23.00	11.50	8.00
1.833	20.00	5.083	20.00	8.333	23.00	11.58	8.00
1.917	20.00	5.167	20.00	8.417	23.00	11.67	8.00
2.000	20.00	5.250	20.00	8.500	23.00	11.75	8.00
2.083	10.00	5.333	20.00	8.583	23.00	11.83	8.00
2.167	10.00	5.417	20.00	8.667	23.00	11.92	8.00
2.250	10.00	5.500	20.00	8.750	23.00	12.00	8.00
2.333	10.00	5.583	20.00	8.833	23.00	12.08	0.00
2.417	10.00	5.667	20.00	8.917	23.00	12.17	0.00
2.500	10.00	5.750	20.00	9.000	23.00	12.25	0.00
2.583	10.00	5.833	20.00	9.083	13.00	12.33	0.00
2.667	10.00	5.917	20.00	9.167	13.00	12.42	0.00
2.750	10.00	6.000	20.00	9.250	13.00	12.50	0.00
2.833	10.00	6.083	43.00	9.333	13.00	12.58	0.00
2.917	10.00	6.167	43.00	9.417	13.00	12.67	0.00
3.000	10.00	6.250	43.00	9.500	13.00	12.75	0.00
3.083	3.00	6.333	43.00	9.583	13.00	12.83	0.00
3.167	3.00	6.417	43.00	9.667	13.00	12.92	0.00
3.250	3.00	6.500	43.00	9.750	13.00	13.00	0.00

Max.Eff.Inten.(mm/hr)=		43.00	45.05
over (min)		5.00	15.00
Storage Coeff. (min)=		1.83 (ii)	11.54 (ii)
Unit Hyd. Tpeak (min)=		5.00	15.00
Unit Hyd. peak (cms)=		0.32	0.09
			TOTALS
PEAK FLOW	(cms)=	0.02	0.00 0.019 (iii)
TIME TO PEAK	(hrs)=	6.50	7.00 7.00
RUNOFF VOLUME	(mm)=	192.00	179.74 189.75
TOTAL RAINFALL	(mm)=	193.00	193.00 193.00
RUNOFF COEFFICIENT	=	0.99	0.93 0.98

***** WARNING: STORAGE COEFF. IS SMALLER THAN TIME STEP!

(i) CN PROCEDURE SELECTED FOR PERVIOUS LOSSES:
CN* = 95.0 Ia = Dep. Storage (Above)
(ii) TIME STEP (DT) SHOULD BE SMALLER OR EQUAL
THAN THE STORAGE COEFFICIENT.
(iii) PEAK FLOW DOES NOT INCLUDE BASEFLOW IF ANY.

CALIB	
STANDHYD (2203)	Area (ha)= 0.17
ID= 1 DT= 5.0 min	Total Imp(%)= 88.00 Dir. Conn.(%)= 86.00

		IMPERVIOUS	PERVIOUS (i)
Surface Area	(ha)=	0.15	0.02
Dep. Storage	(mm)=	1.00	1.50
Average Slope	(%)=	1.00	2.00
Length	(m)=	33.67	40.00
Mannings n	=	0.013	0.250

NOTE: RAINFALL WAS TRANSFORMED TO 5.0 MIN. TIME STEP.

---- TRANSFORMED HYETOGRAPH ----

TIME hrs	RAIN mm/hr	TIME hrs	RAIN mm/hr	TIME hrs	RAIN mm/hr	TIME hrs	RAIN mm/hr
0.083	15.00	3.333	3.00	6.583	43.00	9.83	13.00
0.167	15.00	3.417	3.00	6.667	43.00	9.92	13.00
0.250	15.00	3.500	3.00	6.750	43.00	10.00	13.00
0.333	15.00	3.583	3.00	6.833	43.00	10.08	13.00
0.417	15.00	3.667	3.00	6.917	43.00	10.17	13.00
0.500	15.00	3.750	3.00	7.000	43.00	10.25	13.00
0.583	15.00	3.833	3.00	7.083	20.00	10.33	13.00
0.667	15.00	3.917	3.00	7.167	20.00	10.42	13.00
0.750	15.00	4.000	3.00	7.250	20.00	10.50	13.00
0.833	15.00	4.083	5.00	7.333	20.00	10.58	13.00
0.917	15.00	4.167	5.00	7.417	20.00	10.67	13.00
1.000	15.00	4.250	5.00	7.500	20.00	10.75	13.00
1.083	20.00	4.333	5.00	7.583	20.00	10.83	13.00
1.167	20.00	4.417	5.00	7.667	20.00	10.92	13.00
1.250	20.00	4.500	5.00	7.750	20.00	11.00	13.00
1.333	20.00	4.583	5.00	7.833	20.00	11.08	8.00
1.417	20.00	4.667	5.00	7.917	20.00	11.17	8.00
1.500	20.00	4.750	5.00	8.000	20.00	11.25	8.00
1.583	20.00	4.833	5.00	8.083	23.00	11.33	8.00
1.667	20.00	4.917	5.00	8.167	23.00	11.42	8.00
1.750	20.00	5.000	5.00	8.250	23.00	11.50	8.00
1.833	20.00	5.083	20.00	8.333	23.00	11.58	8.00
1.917	20.00	5.167	20.00	8.417	23.00	11.67	8.00
2.000	20.00	5.250	20.00	8.500	23.00	11.75	8.00
2.083	10.00	5.333	20.00	8.583	23.00	11.83	8.00
2.167	10.00	5.417	20.00	8.667	23.00	11.92	8.00
2.250	10.00	5.500	20.00	8.750	23.00	12.00	8.00
2.333	10.00	5.583	20.00	8.833	23.00	12.08	0.00
2.417	10.00	5.667	20.00	8.917	23.00	12.17	0.00
2.500	10.00	5.750	20.00	9.000	23.00	12.25	0.00
2.583	10.00	5.833	20.00	9.083	13.00	12.33	0.00
2.667	10.00	5.917	20.00	9.167	13.00	12.42	0.00
2.750	10.00	6.000	20.00	9.250	13.00	12.50	0.00
2.833	10.00	6.083	43.00	9.333	13.00	12.58	0.00
2.917	10.00	6.167	43.00	9.417	13.00	12.67	0.00
3.000	10.00	6.250	43.00	9.500	13.00	12.75	0.00
3.083	3.00	6.333	43.00	9.583	13.00	12.83	0.00

3.167	3.00	6.417	43.00	9.667	13.00	12.92	0.00
3.250	3.00	6.500	43.00	9.750	13.00	13.00	0.00

			TOTALS
Max.Eff.Inten.(mm/hr)=	43.00	50.09	
over (min)	5.00	10.00	
Storage Coeff. (min)=	1.86 (ii)	6.36 (ii)	
Unit Hyd. Tpeak (min)=	5.00	10.00	
Unit Hyd. peak (cms)=	0.32	0.15	
PEAK FLOW (cms)=	0.02	0.00	0.020 (iii)
TIME TO PEAK (hrs)=	6.50	7.00	7.00
RUNOFF VOLUME (mm)=	192.00	187.37	191.32
TOTAL RAINFALL (mm)=	193.00	193.00	193.00
RUNOFF COEFFICIENT =	0.99	0.97	0.99

***** WARNING: STORAGE COEFF. IS SMALLER THAN TIME STEP!

(i) CN PROCEDURE SELECTED FOR PERVIOUS LOSSES:
CN* = 98.0 Ia = Dep. Storage (Above)
(ii) TIME STEP (DT) SHOULD BE SMALLER OR EQUAL
THAN THE STORAGE COEFFICIENT.
(iii) PEAK FLOW DOES NOT INCLUDE BASEFLOW IF ANY.

CALIB	
STANDHYD (2206)	Area (ha)= 0.33
ID= 1 DT= 5.0 min	Total Imp(%)= 90.00 Dir. Conn.(%)= 90.00

		IMPERVIOUS	PERVIOUS (i)
Surface Area	(ha)=	0.30	0.03
Dep. Storage	(mm)=	1.00	1.50
Average Slope	(%)=	1.00	2.00
Length	(m)=	46.90	40.00
Mannings n	=	0.013	0.250

NOTE: RAINFALL WAS TRANSFORMED TO 5.0 MIN. TIME STEP.

---- TRANSFORMED HYETOGRAPH ----

TIME hrs	RAIN mm/hr	TIME hrs	RAIN mm/hr	TIME hrs	RAIN mm/hr	TIME hrs	RAIN mm/hr
0.083	15.00	3.333	3.00	6.583	43.00	9.83	13.00
0.167	15.00	3.417	3.00	6.667	43.00	9.92	13.00
0.250	15.00	3.500	3.00	6.750	43.00	10.00	13.00
0.333	15.00	3.583	3.00	6.833	43.00	10.08	13.00
0.417	15.00	3.667	3.00	6.917	43.00	10.17	13.00
0.500	15.00	3.750	3.00	7.000	43.00	10.25	13.00
0.583	15.00	3.833	3.00	7.083	20.00	10.33	13.00
0.667	15.00	3.917	3.00	7.167	20.00	10.42	13.00
0.750	15.00	4.000	3.00	7.250	20.00	10.50	13.00
0.833	15.00	4.083	5.00	7.333	20.00	10.58	13.00
0.917	15.00	4.167	5.00	7.417	20.00	10.67	13.00
1.000	15.00	4.250	5.00	7.500	20.00	10.75	13.00
1.083	20.00	4.333	5.00	7.583	20.00	10.83	13.00
1.167	20.00	4.417	5.00	7.667	20.00	10.92	13.00
1.250	20.00	4.500	5.00	7.750	20.00	11.00	13.00
1.333	20.00	4.583	5.00	7.833	20.00	11.08	8.00
1.417	20.00	4.667	5.00	7.917	20.00	11.17	8.00
1.500	20.00	4.750	5.00	8.000	20.00	11.25	8.00
1.583	20.00	4.833	5.00	8.083	23.00	11.33	8.00
1.667	20.00	4.917	5.00	8.167	23.00	11.42	8.00
1.750	20.00	5.000	5.00	8.250	23.00	11.50	8.00
1.833	20.00	5.083	20.00	8.333	23.00	11.58	8.00

1.917	20.00	5.167	20.00	8.417	23.00	11.67	8.00
2.000	20.00	5.250	20.00	8.500	23.00	11.75	8.00
2.083	10.00	5.333	20.00	8.583	23.00	11.83	8.00
2.167	10.00	5.417	20.00	8.667	23.00	11.92	8.00
2.250	10.00	5.500	20.00	8.750	23.00	12.00	8.00
2.333	10.00	5.583	20.00	8.833	23.00	12.08	0.00
2.417	10.00	5.667	20.00	8.917	23.00	12.17	0.00
2.500	10.00	5.750	20.00	9.000	23.00	12.25	0.00
2.583	10.00	5.833	20.00	9.083	13.00	12.33	0.00
2.667	10.00	5.917	20.00	9.167	13.00	12.42	0.00
2.750	10.00	6.000	20.00	9.250	13.00	12.50	0.00
2.833	10.00	6.083	43.00	9.333	13.00	12.58	0.00
2.917	10.00	6.167	43.00	9.417	13.00	12.67	0.00
3.000	10.00	6.250	43.00	9.500	13.00	12.75	0.00
3.083	3.00	6.333	43.00	9.583	13.00	12.83	0.00
3.167	3.00	6.417	43.00	9.667	13.00	12.92	0.00
3.250	3.00	6.500	43.00	9.750	13.00	13.00	0.00

			TOTALS
Max.Eff.Inten.(mm/hr)=	43.00	42.98	
over (min)	5.00	10.00	
Storage Coeff. (min)=	2.27 (ii)	6.38 (ii)	
Unit Hyd. Tpeak (min)=	5.00	10.00	
Unit Hyd. peak (cms)=	0.30	0.15	
PEAK FLOW (cms)=	0.04	0.00	0.039 (iii)
TIME TO PEAK (hrs)=	6.58	7.00	6.92
RUNOFF VOLUME (mm)=	192.00	188.97	191.69
TOTAL RAINFALL (mm)=	193.00	193.00	193.00
RUNOFF COEFFICIENT =	0.99	0.98	0.99

***** WARNING: STORAGE COEFF. IS SMALLER THAN TIME STEP!

(i) CN PROCEDURE SELECTED FOR PERVIOUS LOSSES:
CN* = 99.0 Ia = Dep. Storage (Above)
(ii) TIME STEP (DT) SHOULD BE SMALLER OR EQUAL
THAN THE STORAGE COEFFICIENT.
(iii) PEAK FLOW DOES NOT INCLUDE BASEFLOW IF ANY.

CALIB	
STANDHYD (2207)	Area (ha)= 0.10
ID= 1 DT= 5.0 min	Total Imp(%)= 52.00 Dir. Conn.(%)= 28.00

		IMPERVIOUS	PERVIOUS (i)
Surface Area	(ha)=	0.05	0.05
Dep. Storage	(mm)=	1.00	1.50
Average Slope	(%)=	1.00	2.00
Length	(m)=	25.82	40.00
Mannings n	=	0.013	0.250

NOTE: RAINFALL WAS TRANSFORMED TO 5.0 MIN. TIME STEP.

---- TRANSFORMED HYETOGRAPH ----

TIME hrs	RAIN mm/hr	TIME hrs	RAIN mm/hr	TIME hrs	RAIN mm/hr	TIME hrs	RAIN mm/hr
0.083	15.00	3.333	3.00	6.583	43.00	9.83	13.00
0.167	15.00	3.417	3.00	6.667	43.00	9.92	13.00
0.250	15.00	3.500	3.00	6.750	43.00	10.00	13.00
0.333	15.00	3.583	3.00	6.833	43.00	10.08	13.00
0.417	15.00	3.667	3.00	6.917	43.00	10.17	13.00
0.500	15.00	3.750	3.00	7.000	43.00	10.25	13.00
0.583	15.00	3.833	3.00	7.083	20.00	10.33	13.00

0.667	15.00	3.917	3.00	7.167	20.00	10.42	13.00
0.750	15.00	4.000	3.00	7.250	20.00	10.50	13.00
0.833	15.00	4.083	5.00	7.333	20.00	10.58	13.00
0.917	15.00	4.167	5.00	7.417	20.00	10.67	13.00
1.000	15.00	4.250	5.00	7.500	20.00	10.75	13.00
1.083	20.00	4.333	5.00	7.583	20.00	10.83	13.00
1.167	20.00	4.417	5.00	7.667	20.00	10.92	13.00
1.250	20.00	4.500	5.00	7.750	20.00	11.00	13.00
1.333	20.00	4.583	5.00	7.833	20.00	11.08	8.00
1.417	20.00	4.667	5.00	7.917	20.00	11.17	8.00
1.500	20.00	4.750	5.00	8.000	20.00	11.25	8.00
1.583	20.00	4.833	5.00	8.083	23.00	11.33	8.00
1.667	20.00	4.917	5.00	8.167	23.00	11.42	8.00
1.750	20.00	5.000	5.00	8.250	23.00	11.50	8.00
1.833	20.00	5.083	20.00	8.333	23.00	11.58	8.00
1.917	20.00	5.167	20.00	8.417	23.00	11.67	8.00
2.000	20.00	5.250	20.00	8.500	23.00	11.75	8.00
2.083	10.00	5.333	20.00	8.583	23.00	11.83	8.00
2.167	10.00	5.417	20.00	8.667	23.00	11.92	8.00
2.250	10.00	5.500	20.00	8.750	23.00	12.00	8.00
2.333	10.00	5.583	20.00	8.833	23.00	12.08	0.00
2.417	10.00	5.667	20.00	8.917	23.00	12.17	0.00
2.500	10.00	5.750	20.00	9.000	23.00	12.25	0.00
2.583	10.00	5.833	20.00	9.083	13.00	12.33	0.00
2.667	10.00	5.917	20.00	9.167	13.00	12.42	0.00
2.750	10.00	6.000	20.00	9.250	13.00	12.50	0.00
2.833	10.00	6.083	43.00	9.333	13.00	12.58	0.00
2.917	10.00	6.167	43.00	9.417	13.00	12.67	0.00
3.000	10.00	6.250	43.00	9.500	13.00	12.75	0.00
3.083	3.00	6.333	43.00	9.583	13.00	12.83	0.00
3.167	3.00	6.417	43.00	9.667	13.00	12.92	0.00
3.250	3.00	6.500	43.00	9.750	13.00	13.00	0.00

Max.Eff.Inten.(mm/hr)=	43.00	55.59	
over (min)	5.00	15.00	
Storage Coeff. (min)=	1.59 (ii)	10.51 (ii)	
Unit Hyd. Tpeak (min)=	5.00	15.00	
Unit Hyd. peak (cms)=	0.33	0.09	
			TOTALS
PEAK FLOW (cms)=	0.00	0.01	0.011 (iii)
TIME TO PEAK (hrs)=	6.42	7.00	7.00
RUNOFF VOLUME (mm)=	192.00	142.97	156.65
TOTAL RAINFALL (mm)=	193.00	193.00	193.00
RUNOFF COEFFICIENT =	0.99	0.74	0.81

***** WARNING: STORAGE COEFF. IS SMALLER THAN TIME STEP!

(i) CN PROCEDURE SELECTED FOR PERVIOUS LOSSES:
CN* = 72.0 Ia = Dep. Storage (Above)
(ii) TIME STEP (DT) SHOULD BE SMALLER OR EQUAL
THAN THE STORAGE COEFFICIENT.
(iii) PEAK FLOW DOES NOT INCLUDE BASEFLOW IF ANY.

CALIB	
STANDHYD (2204)	Area (ha)= 11.31
ID= 1 DT= 5.0 min	Total Imp(%)= 21.00 Dir. Conn.(%)= 12.00

		IMPERVIOUS	PERVIOUS (i)
Surface Area	(ha)=	2.38	8.93
Dep. Storage	(mm)=	1.00	1.50
Average Slope	(%)=	1.00	2.00
Length	(m)=	274.59	40.00

Mannings n = 0.013 0.250

NOTE: RAINFALL WAS TRANSFORMED TO 5.0 MIN. TIME STEP.

---- TRANSFORMED HYETOGRAPH ----

TIME hrs	RAIN mm/hr	TIME hrs	RAIN mm/hr	TIME hrs	RAIN mm/hr	TIME hrs	RAIN mm/hr
0.083	15.00	3.333	3.00	6.583	43.00	9.83	13.00
0.167	15.00	3.417	3.00	6.667	43.00	9.92	13.00
0.250	15.00	3.500	3.00	6.750	43.00	10.00	13.00
0.333	15.00	3.583	3.00	6.833	43.00	10.08	13.00
0.417	15.00	3.667	3.00	6.917	43.00	10.17	13.00
0.500	15.00	3.750	3.00	7.000	43.00	10.25	13.00
0.583	15.00	3.833	3.00	7.083	20.00	10.33	13.00
0.667	15.00	3.917	3.00	7.167	20.00	10.42	13.00
0.750	15.00	4.000	3.00	7.250	20.00	10.50	13.00
0.833	15.00	4.083	5.00	7.333	20.00	10.58	13.00
0.917	15.00	4.167	5.00	7.417	20.00	10.67	13.00
1.000	15.00	4.250	5.00	7.500	20.00	10.75	13.00
1.083	20.00	4.333	5.00	7.583	20.00	10.83	13.00
1.167	20.00	4.417	5.00	7.667	20.00	10.92	13.00
1.250	20.00	4.500	5.00	7.750	20.00	11.00	13.00
1.333	20.00	4.583	5.00	7.833	20.00	11.08	8.00
1.417	20.00	4.667	5.00	7.917	20.00	11.17	8.00
1.500	20.00	4.750	5.00	8.000	20.00	11.25	8.00
1.583	20.00	4.833	5.00	8.083	23.00	11.33	8.00
1.667	20.00	4.917	5.00	8.167	23.00	11.42	8.00
1.750	20.00	5.000	5.00	8.250	23.00	11.50	8.00
1.833	20.00	5.083	20.00	8.333	23.00	11.58	8.00
1.917	20.00	5.167	20.00	8.417	23.00	11.67	8.00
2.000	20.00	5.250	20.00	8.500	23.00	11.75	8.00
2.083	10.00	5.333	20.00	8.583	23.00	11.83	8.00
2.167	10.00	5.417	20.00	8.667	23.00	11.92	8.00
2.250	10.00	5.500	20.00	8.750	23.00	12.00	8.00
2.333	10.00	5.583	20.00	8.833	23.00	12.08	0.00
2.417	10.00	5.667	20.00	8.917	23.00	12.17	0.00
2.500	10.00	5.750	20.00	9.000	23.00	12.25	0.00
2.583	10.00	5.833	20.00	9.083	13.00	12.33	0.00
2.667	10.00	5.917	20.00	9.167	13.00	12.42	0.00
2.750	10.00	6.000	20.00	9.250	13.00	12.50	0.00
2.833	10.00	6.083	43.00	9.333	13.00	12.58	0.00
2.917	10.00	6.167	43.00	9.417	13.00	12.67	0.00
3.000	10.00	6.250	43.00	9.500	13.00	12.75	0.00
3.083	3.00	6.333	43.00	9.583	13.00	12.83	0.00
3.167	3.00	6.417	43.00	9.667	13.00	12.92	0.00
3.250	3.00	6.500	43.00	9.750	13.00	13.00	0.00

			TOTALS
Max.Eff.Inten.(mm/hr)=	43.00	38.28	
over (min)	5.00	20.00	
Storage Coeff. (min)=	6.56 (ii)	16.93 (ii)	
Unit Hyd. Tpeak (min)=	5.00	20.00	
Unit Hyd. peak (cms)=	0.18	0.06	
PEAK FLOW (cms)=	0.16	0.89	1.053 (iii)
TIME TO PEAK (hrs)=	7.00	7.00	7.00
RUNOFF VOLUME (mm)=	192.00	131.03	138.34
TOTAL RAINFALL (mm)=	193.00	193.00	193.00
RUNOFF COEFFICIENT =	0.99	0.68	0.72

***** WARNING:FOR AREAS WITH IMPERVIOUS RATIOS BELOW 20%
YOU SHOULD CONSIDER SPLITTING THE AREA.

(i) CN PROCEDURE SELECTED FOR PERVIOUS LOSSES:

```
            CN*  =  72.0    Ia = Dep. Storage  (Above)
      (ii) TIME STEP (DT) SHOULD BE SMALLER OR EQUAL
           THAN THE STORAGE COEFFICIENT.
     (iii) PEAK FLOW DOES NOT INCLUDE BASEFLOW IF ANY.

--------------------------------------------------------------------------------

--------------------
| ADD HYD  (  0018)|
|   1 +  2 =  3    |          AREA    QPEAK    TPEAK     R.V.
--------------------          (ha)    (cms)    (hrs)     (mm)
        ID1= 1 (  2204):    11.31   1.053     7.00   138.34
      + ID2= 2 (  2207):     0.10   0.011     7.00   156.65
        ==========================================================
        ID = 3 (  0018):    11.41   1.064     7.00   138.50

     NOTE:  PEAK FLOWS DO NOT INCLUDE BASEFLOWS IF ANY.
--------------------------------------------------------------------------------
--------------------
| ROUTE CHN( 22061)|
| IN= 2---> OUT= 1 |     Routing time step (min)'=  5.00
--------------------
               <------ DATA FOR SECTION (   1.1) ------>
               Distance      Elevation       Manning
                   0.00          0.15         0.0110
                   0.01          0.00    0.0110 /0.0110  Main Channel
                   4.26          0.02         0.0110      Main Channel
                   8.51          0.00    0.0110 /0.0110  Main Channel
                   8.52          0.15         0.0110

      <---------------------- TRAVEL TIME TABLE ---------------------->
       DEPTH     ELEV       VOLUME     FLOW RATE     VELOCITY   TRAV.TIME
        (m)       (m)      (cu.m.)       (cms)         (m/s)      (min)
       0.01      0.01     .256E+01        0.0          0.16       21.30
       0.02      0.02     .102E+02        0.0          0.25       13.42
       0.02      0.02     .228E+02        0.0          0.36        9.59
       0.03      0.03     .365E+02        0.1          0.49        7.00
       0.04      0.04     .503E+02        0.1          0.60        5.66
       0.05      0.05     .641E+02        0.2          0.71        4.81
       0.06      0.06     .779E+02        0.3          0.81        4.23
       0.06      0.06     .917E+02        0.4          0.90        3.79
       0.07      0.07     .105E+03        0.5          0.99        3.46
       0.08      0.08     .119E+03        0.6          1.07        3.19
       0.09      0.09     .133E+03        0.7          1.15        2.96
       0.09      0.09     .147E+03        0.9          1.23        2.77
       0.10      0.10     .161E+03        1.0          1.31        2.61
       0.11      0.11     .174E+03        1.2          1.38        2.47
       0.12      0.12     .188E+03        1.3          1.45        2.35
       0.13      0.13     .202E+03        1.5          1.52        2.24
       0.13      0.13     .216E+03        1.7          1.59        2.15
       0.14      0.14     .230E+03        1.9          1.66        2.06
       0.15      0.15     .243E+03        2.0          1.73        1.98

                                      <---- hydrograph ---->   <-pipe / channel->
                              AREA    QPEAK   TPEAK   R.V.    MAX DEPTH  MAX VEL
                              (ha)    (cms)   (hrs)   (mm)       (m)      (m/s)
   INFLOW : ID= 2 (  0018)   11.41     1.06    7.00 138.50      0.10      1.33
   OUTFLOW: ID= 1 ( 22061)   11.41     1.06    7.00 138.50      0.10      1.32



--------------------------------------------------------------------------------

--------------------
```

| ADD HYD (22060)|
| 1 + 2 = 3 |

	AREA (ha)	QPEAK (cms)	TPEAK (hrs)	R.V. (mm)
ID1= 1 (2206):	0.33	0.039	6.92	191.69
+ ID2= 2 (22061):	11.41	1.058	7.00	138.50
ID = 3 (22060):	11.74	1.098	7.00	139.99

NOTE: PEAK FLOWS DO NOT INCLUDE BASEFLOWS IF ANY.

| CALIB |
| STANDHYD (2205)| Area (ha)= 0.83
|ID= 1 DT= 5.0 min | Total Imp(%)= 83.00 Dir. Conn.(%)= 82.00

		IMPERVIOUS	PERVIOUS (i)
Surface Area	(ha)=	0.69	0.14
Dep. Storage	(mm)=	1.00	1.50
Average Slope	(%)=	1.00	2.00
Length	(m)=	74.39	40.00
Mannings n	=	0.013	0.250

NOTE: RAINFALL WAS TRANSFORMED TO 5.0 MIN. TIME STEP.

---- TRANSFORMED HYETOGRAPH ----

TIME hrs	RAIN mm/hr	TIME hrs	RAIN mm/hr	TIME hrs	RAIN mm/hr	TIME hrs	RAIN mm/hr
0.083	15.00	3.333	3.00	6.583	43.00	9.83	13.00
0.167	15.00	3.417	3.00	6.667	43.00	9.92	13.00
0.250	15.00	3.500	3.00	6.750	43.00	10.00	13.00
0.333	15.00	3.583	3.00	6.833	43.00	10.08	13.00
0.417	15.00	3.667	3.00	6.917	43.00	10.17	13.00
0.500	15.00	3.750	3.00	7.000	43.00	10.25	13.00
0.583	15.00	3.833	3.00	7.083	20.00	10.33	13.00
0.667	15.00	3.917	3.00	7.167	20.00	10.42	13.00
0.750	15.00	4.000	3.00	7.250	20.00	10.50	13.00
0.833	15.00	4.083	5.00	7.333	20.00	10.58	13.00
0.917	15.00	4.167	5.00	7.417	20.00	10.67	13.00
1.000	15.00	4.250	5.00	7.500	20.00	10.75	13.00
1.083	20.00	4.333	5.00	7.583	20.00	10.83	13.00
1.167	20.00	4.417	5.00	7.667	20.00	10.92	13.00
1.250	20.00	4.500	5.00	7.750	20.00	11.00	13.00
1.333	20.00	4.583	5.00	7.833	20.00	11.08	8.00
1.417	20.00	4.667	5.00	7.917	20.00	11.17	8.00
1.500	20.00	4.750	5.00	8.000	20.00	11.25	8.00
1.583	20.00	4.833	5.00	8.083	23.00	11.33	8.00
1.667	20.00	4.917	5.00	8.167	23.00	11.42	8.00
1.750	20.00	5.000	5.00	8.250	23.00	11.50	8.00
1.833	20.00	5.083	20.00	8.333	23.00	11.58	8.00
1.917	20.00	5.167	20.00	8.417	23.00	11.67	8.00
2.000	20.00	5.250	20.00	8.500	23.00	11.75	8.00
2.083	10.00	5.333	20.00	8.583	23.00	11.83	8.00
2.167	10.00	5.417	20.00	8.667	23.00	11.92	8.00
2.250	10.00	5.500	20.00	8.750	23.00	12.00	8.00
2.333	10.00	5.583	20.00	8.833	23.00	12.08	0.00
2.417	10.00	5.667	20.00	8.917	23.00	12.17	0.00
2.500	10.00	5.750	20.00	9.000	23.00	12.25	0.00
2.583	10.00	5.833	20.00	9.083	13.00	12.33	0.00
2.667	10.00	5.917	20.00	9.167	13.00	12.42	0.00
2.750	10.00	6.000	20.00	9.250	13.00	12.50	0.00
2.833	10.00	6.083	43.00	9.333	13.00	12.58	0.00
2.917	10.00	6.167	43.00	9.417	13.00	12.67	0.00
3.000	10.00	6.250	43.00	9.500	13.00	12.75	0.00

3.083	3.00	6.333	43.00	9.583	13.00	12.83	0.00
3.167	3.00	6.417	43.00	9.667	13.00	12.92	0.00
3.250	3.00	6.500	43.00	9.750	13.00	13.00	0.00

Max.Eff.Inten.(mm/hr)=	43.00		43.82	
over (min)	5.00		15.00	
Storage Coeff. (min)=	3.00	(ii)	12.82	(ii)
Unit Hyd. Tpeak (min)=	5.00		15.00	
Unit Hyd. peak (cms)=	0.28		0.08	
				TOTALS
PEAK FLOW (cms)=	0.08		0.02	0.098 (iii)
TIME TO PEAK (hrs)=	6.75		7.00	7.00
RUNOFF VOLUME (mm)=	192.00		168.18	187.71
TOTAL RAINFALL (mm)=	193.00		193.00	193.00
RUNOFF COEFFICIENT =	0.99		0.87	0.97

***** WARNING: STORAGE COEFF. IS SMALLER THAN TIME STEP!

(i) CN PROCEDURE SELECTED FOR PERVIOUS LOSSES:
CN* = 90.0 Ia = Dep. Storage (Above)
(ii) TIME STEP (DT) SHOULD BE SMALLER OR EQUAL
THAN THE STORAGE COEFFICIENT.
(iii) PEAK FLOW DOES NOT INCLUDE BASEFLOW IF ANY.

ADD HYD (0017)		AREA	QPEAK	TPEAK	R.V.
		(ha)	(cms)	(hrs)	(mm)
ID1= 1 (2205):		0.83	0.098	7.00	187.71
+ ID2= 2 (22060):		11.74	1.098	7.00	139.99
ID = 3 (0017):		12.57	1.196	7.00	143.14

NOTE: PEAK FLOWS DO NOT INCLUDE BASEFLOWS IF ANY.

ROUTE CHN(22031)	IN= 2---> OUT= 1	Routing time step (min)'= 5.00

<------ DATA FOR SECTION (1.1) ------>

Distance	Elevation	Manning	
0.00	0.15	0.0110	
0.01	0.00	0.0110 /0.0110	Main Channel
4.26	0.02	0.0110	Main Channel
8.51	0.00	0.0110 /0.0110	Main Channel
8.52	0.15	0.0110	

<---------- TRAVEL TIME TABLE ---------->

DEPTH (m)	ELEV (m)	VOLUME (cu.m.)	FLOW RATE (cms)	VELOCITY (m/s)	TRAV.TIME (min)
0.01	0.01	.107E+01	0.0	0.16	8.90
0.02	0.02	.427E+01	0.0	0.25	5.60
0.02	0.02	.951E+01	0.0	0.36	4.01
0.03	0.03	.153E+02	0.1	0.49	2.92
0.04	0.04	.210E+02	0.1	0.60	2.36
0.05	0.05	.268E+02	0.2	0.71	2.01
0.06	0.06	.325E+02	0.3	0.81	1.77
0.06	0.06	.383E+02	0.4	0.90	1.58
0.07	0.07	.440E+02	0.5	0.99	1.44
0.08	0.08	.498E+02	0.6	1.07	1.33
0.09	0.09	.556E+02	0.7	1.15	1.24
0.09	0.09	.613E+02	0.9	1.23	1.16

0.10	0.10	.671E+02	1.0	1.31	1.09
0.11	0.11	.728E+02	1.2	1.38	1.03
0.12	0.12	.786E+02	1.3	1.45	0.98
0.13	0.13	.844E+02	1.5	1.52	0.94
0.13	0.13	.901E+02	1.7	1.59	0.90
0.14	0.14	.959E+02	1.9	1.66	0.86
0.15	0.15	.102E+03	2.0	1.73	0.83

	<---- hydrograph ---->			<-pipe / channel->	
	AREA (ha)	QPEAK (cms)	TPEAK (hrs)	R.V. (mm)	MAX DEPTH (m)	MAX VEL (m/s)
INFLOW : ID= 2 (0017)	12.57	1.20	7.00	143.14	0.11	1.39
OUTFLOW: ID= 1 (22031)	12.57	1.19	7.00	143.14	0.11	1.39

ADD HYD (22030)
1 + 2 = 3

	AREA (ha)	QPEAK (cms)	TPEAK (hrs)	R.V. (mm)
ID1= 1 (2203):	0.17	0.020	7.00	191.32
+ ID2= 2 (22031):	12.57	1.194	7.00	143.14
ID = 3 (22030):	12.74	1.214	7.00	143.78

NOTE: PEAK FLOWS DO NOT INCLUDE BASEFLOWS IF ANY.

CALIB
STANDHYD (2201)
ID= 1 DT= 5.0 min

Area (ha)= 1.54
Total Imp(%)= 44.00 Dir. Conn.(%)= 28.00

		IMPERVIOUS	PERVIOUS (i)
Surface Area	(ha)=	0.68	0.86
Dep. Storage	(mm)=	1.00	1.50
Average Slope	(%)=	1.00	2.00
Length	(m)=	101.32	40.00
Mannings n	=	0.013	0.250

NOTE: RAINFALL WAS TRANSFORMED TO 5.0 MIN. TIME STEP.

---- TRANSFORMED HYETOGRAPH ----

TIME hrs	RAIN mm/hr	TIME hrs	RAIN mm/hr	TIME hrs	RAIN mm/hr	TIME hrs	RAIN mm/hr
0.083	15.00	3.333	3.00	6.583	43.00	9.83	13.00
0.167	15.00	3.417	3.00	6.667	43.00	9.92	13.00
0.250	15.00	3.500	3.00	6.750	43.00	10.00	13.00
0.333	15.00	3.583	3.00	6.833	43.00	10.08	13.00
0.417	15.00	3.667	3.00	6.917	43.00	10.17	13.00
0.500	15.00	3.750	3.00	7.000	43.00	10.25	13.00
0.583	15.00	3.833	3.00	7.083	20.00	10.33	13.00
0.667	15.00	3.917	3.00	7.167	20.00	10.42	13.00
0.750	15.00	4.000	3.00	7.250	20.00	10.50	13.00
0.833	15.00	4.083	5.00	7.333	20.00	10.58	13.00
0.917	15.00	4.167	5.00	7.417	20.00	10.67	13.00
1.000	15.00	4.250	5.00	7.500	20.00	10.75	13.00
1.083	20.00	4.333	5.00	7.583	20.00	10.83	13.00
1.167	20.00	4.417	5.00	7.667	20.00	10.92	13.00
1.250	20.00	4.500	5.00	7.750	20.00	11.00	13.00
1.333	20.00	4.583	5.00	7.833	20.00	11.08	8.00
1.417	20.00	4.667	5.00	7.917	20.00	11.17	8.00

1.500	20.00	4.750	5.00	8.000	20.00	11.25	8.00
1.583	20.00	4.833	5.00	8.083	23.00	11.33	8.00
1.667	20.00	4.917	5.00	8.167	23.00	11.42	8.00
1.750	20.00	5.000	5.00	8.250	23.00	11.50	8.00
1.833	20.00	5.083	20.00	8.333	23.00	11.58	8.00
1.917	20.00	5.167	20.00	8.417	23.00	11.67	8.00
2.000	20.00	5.250	20.00	8.500	23.00	11.75	8.00
2.083	10.00	5.333	20.00	8.583	23.00	11.83	8.00
2.167	10.00	5.417	20.00	8.667	23.00	11.92	8.00
2.250	10.00	5.500	20.00	8.750	23.00	12.00	8.00
2.333	10.00	5.583	20.00	8.833	23.00	12.08	0.00
2.417	10.00	5.667	20.00	8.917	23.00	12.17	0.00
2.500	10.00	5.750	20.00	9.000	23.00	12.25	0.00
2.583	10.00	5.833	20.00	9.083	13.00	12.33	0.00
2.667	10.00	5.917	20.00	9.167	13.00	12.42	0.00
2.750	10.00	6.000	20.00	9.250	13.00	12.50	0.00
2.833	10.00	6.083	43.00	9.333	13.00	12.58	0.00
2.917	10.00	6.167	43.00	9.417	13.00	12.67	0.00
3.000	10.00	6.250	43.00	9.500	13.00	12.75	0.00
3.083	3.00	6.333	43.00	9.583	13.00	12.83	0.00
3.167	3.00	6.417	43.00	9.667	13.00	12.92	0.00
3.250	3.00	6.500	43.00	9.750	13.00	13.00	0.00

Max.Eff.Inten.(mm/hr)=	43.00	47.64	
over (min)	5.00	15.00	
Storage Coeff. (min)=	3.61 (ii)	13.10 (ii)	
Unit Hyd. Tpeak (min)=	5.00	15.00	
Unit Hyd. peak (cms)=	0.25	0.08	
			TOTALS
PEAK FLOW (cms)=	0.05	0.11	0.162 (iii)
TIME TO PEAK (hrs)=	6.83	7.00	7.00
RUNOFF VOLUME (mm)=	192.00	142.81	156.58
TOTAL RAINFALL (mm)=	193.00	193.00	193.00
RUNOFF COEFFICIENT =	0.99	0.74	0.81

***** WARNING: STORAGE COEFF. IS SMALLER THAN TIME STEP!

(i) CN PROCEDURE SELECTED FOR PERVIOUS LOSSES:
CN* = 75.0 Ia = Dep. Storage (Above)
(ii) TIME STEP (DT) SHOULD BE SMALLER OR EQUAL
THAN THE STORAGE COEFFICIENT.
(iii) PEAK FLOW DOES NOT INCLUDE BASEFLOW IF ANY.

ADD HYD (0016)					
1 + 2 = 3	AREA (ha)	QPEAK (cms)	TPEAK (hrs)	R.V. (mm)	
ID1= 1 (2201):	1.54	0.162	7.00	156.58	
+ ID2= 2 (22030):	12.74	1.214	7.00	143.78	
ID = 3 (0016):	14.28	1.376	7.00	145.16	

NOTE: PEAK FLOWS DO NOT INCLUDE BASEFLOWS IF ANY.

ROUTE CHN(22021)	
IN= 2---> OUT= 1	Routing time step (min)'= 5.00

<------ DATA FOR SECTION (1.1) ------>

Distance	Elevation	Manning	
0.00	0.15	0.0110	
0.01	0.00	0.0110 /0.0110	Main Channel

4.26	0.02	0.0110	Main Channel
8.51	0.00	0.0110 /0.0110	Main Channel
8.52	0.15	0.0110	

<-------------------- TRAVEL TIME TABLE ---------------------->

DEPTH (m)	ELEV (m)	VOLUME (cu.m.)	FLOW RATE (cms)	VELOCITY (m/s)	TRAV.TIME (min)
0.01	0.01	.976E+00	0.0	0.16	8.13
0.02	0.02	.390E+01	0.0	0.25	5.12
0.02	0.02	.869E+01	0.0	0.36	3.66
0.03	0.03	.139E+02	0.1	0.49	2.67
0.04	0.04	.192E+02	0.1	0.60	2.16
0.05	0.05	.245E+02	0.2	0.71	1.84
0.06	0.06	.297E+02	0.3	0.81	1.61
0.06	0.06	.350E+02	0.4	0.90	1.45
0.07	0.07	.402E+02	0.5	0.99	1.32
0.08	0.08	.455E+02	0.6	1.07	1.22
0.09	0.09	.508E+02	0.7	1.15	1.13
0.09	0.09	.560E+02	0.9	1.23	1.06
0.10	0.10	.613E+02	1.0	1.31	1.00
0.11	0.11	.666E+02	1.2	1.38	0.94
0.12	0.12	.718E+02	1.3	1.45	0.90
0.13	0.13	.771E+02	1.5	1.52	0.86
0.13	0.13	.823E+02	1.7	1.59	0.82
0.14	0.14	.876E+02	1.9	1.66	0.79
0.15	0.15	.929E+02	2.0	1.73	0.76

		<---- hydrograph ---->			<-pipe / channel->	
	AREA (ha)	QPEAK (cms)	TPEAK (hrs)	R.V. (mm)	MAX DEPTH (m)	MAX VEL (m/s)
INFLOW : ID= 2 (0016)	14.28	1.38	7.00	145.16	0.12	1.47
OUTFLOW: ID= 1 (22021)	14.28	1.37	7.00	145.16	0.12	1.47

ADD HYD (22020)					
1 + 2 = 3	AREA (ha)	QPEAK (cms)	TPEAK (hrs)	R.V. (mm)	
ID1= 1 (2202):	0.16	0.019	7.00	189.75	
+ ID2= 2 (22021):	14.28	1.374	7.00	145.16	
ID = 3 (22020):	14.44	1.393	7.00	145.65	

NOTE: PEAK FLOWS DO NOT INCLUDE BASEFLOWS IF ANY.

ADD HYD (0015)					
1 + 2 = 3	AREA (ha)	QPEAK (cms)	TPEAK (hrs)	R.V. (mm)	
ID1= 1 (22020):	14.44	1.393	7.00	145.65	
+ ID2= 2 (2300):	0.23	0.012	7.00	74.46	
ID = 3 (0015):	14.67	1.405	7.00	144.54	

NOTE: PEAK FLOWS DO NOT INCLUDE BASEFLOWS IF ANY.

ROUTE CHN(22001)	
IN= 2---> OUT= 1	Routing time step (min)'= 5.00

<------ DATA FOR SECTION (1.1) ------>

Distance	Elevation	Manning	
0.00	0.15	0.0110	
0.01	0.00	0.0110 /0.0110	Main Channel
4.26	0.02	0.0110	Main Channel
8.51	0.00	0.0110 /0.0110	Main Channel
8.52	0.15	0.0110	

<---------- TRAVEL TIME TABLE ---------->

DEPTH (m)	ELEV (m)	VOLUME (cu.m.)	FLOW RATE (cms)	VELOCITY (m/s)	TRAV.TIME (min)
0.01	0.01	.692E+00	0.0	0.16	5.76
0.02	0.02	.277E+01	0.0	0.25	3.63
0.02	0.02	.616E+01	0.0	0.36	2.59
0.03	0.03	.989E+01	0.1	0.49	1.89
0.04	0.04	.136E+02	0.1	0.60	1.53
0.05	0.05	.173E+02	0.2	0.71	1.30
0.06	0.06	.211E+02	0.3	0.81	1.14
0.06	0.06	.248E+02	0.4	0.90	1.03
0.07	0.07	.285E+02	0.5	0.99	0.93
0.08	0.08	.323E+02	0.6	1.07	0.86
0.09	0.09	.360E+02	0.7	1.15	0.80
0.09	0.09	.397E+02	0.9	1.23	0.75
0.10	0.10	.434E+02	1.0	1.31	0.71
0.11	0.11	.472E+02	1.2	1.38	0.67
0.12	0.12	.509E+02	1.3	1.45	0.64
0.13	0.13	.546E+02	1.5	1.52	0.61
0.13	0.13	.584E+02	1.7	1.59	0.58
0.14	0.14	.621E+02	1.9	1.66	0.56
0.15	0.15	.658E+02	2.0	1.73	0.54

	AREA (ha)	<---- hydrograph ----> QPEAK (cms)	TPEAK (hrs)	R.V. (mm)	<-pipe / channel-> MAX DEPTH (m)	MAX VEL (m/s)
INFLOW : ID= 2 (0015)	14.67	1.41	7.00	144.54	0.12	1.48
OUTFLOW: ID= 1 (22001)	14.67	1.40	7.00	144.54	0.12	1.48

CALIB STANDHYD (2200) ID= 1 DT= 5.0 min	Area (ha)= 0.11 Total Imp(%)= 86.00 Dir. Conn.(%)= 86.00

		IMPERVIOUS	PERVIOUS (i)
Surface Area	(ha)=	0.09	0.02
Dep. Storage	(mm)=	1.00	1.50
Average Slope	(%)=	1.00	2.00
Length	(m)=	27.08	40.00
Mannings n	=	0.013	0.250

NOTE: RAINFALL WAS TRANSFORMED TO 5.0 MIN. TIME STEP.

---- TRANSFORMED HYETOGRAPH ----

TIME hrs	RAIN mm/hr	TIME hrs	RAIN mm/hr	TIME hrs	RAIN mm/hr	TIME hrs	RAIN mm/hr
0.083	15.00	3.333	3.00	6.583	43.00	9.83	13.00
0.167	15.00	3.417	3.00	6.667	43.00	9.92	13.00
0.250	15.00	3.500	3.00	6.750	43.00	10.00	13.00
0.333	15.00	3.583	3.00	6.833	43.00	10.08	13.00
0.417	15.00	3.667	3.00	6.917	43.00	10.17	13.00
0.500	15.00	3.750	3.00	7.000	43.00	10.25	13.00

0.583	15.00	3.833	3.00	7.083	20.00	10.33	13.00
0.667	15.00	3.917	3.00	7.167	20.00	10.42	13.00
0.750	15.00	4.000	3.00	7.250	20.00	10.50	13.00
0.833	15.00	4.083	5.00	7.333	20.00	10.58	13.00
0.917	15.00	4.167	5.00	7.417	20.00	10.67	13.00
1.000	15.00	4.250	5.00	7.500	20.00	10.75	13.00
1.083	20.00	4.333	5.00	7.583	20.00	10.83	13.00
1.167	20.00	4.417	5.00	7.667	20.00	10.92	13.00
1.250	20.00	4.500	5.00	7.750	20.00	11.00	13.00
1.333	20.00	4.583	5.00	7.833	20.00	11.08	8.00
1.417	20.00	4.667	5.00	7.917	20.00	11.17	8.00
1.500	20.00	4.750	5.00	8.000	20.00	11.25	8.00
1.583	20.00	4.833	5.00	8.083	23.00	11.33	8.00
1.667	20.00	4.917	5.00	8.167	23.00	11.42	8.00
1.750	20.00	5.000	5.00	8.250	23.00	11.50	8.00
1.833	20.00	5.083	20.00	8.333	23.00	11.58	8.00
1.917	20.00	5.167	20.00	8.417	23.00	11.67	8.00
2.000	20.00	5.250	20.00	8.500	23.00	11.75	8.00
2.083	10.00	5.333	20.00	8.583	23.00	11.83	8.00
2.167	10.00	5.417	20.00	8.667	23.00	11.92	8.00
2.250	10.00	5.500	20.00	8.750	23.00	12.00	8.00
2.333	10.00	5.583	20.00	8.833	23.00	12.08	0.00
2.417	10.00	5.667	20.00	8.917	23.00	12.17	0.00
2.500	10.00	5.750	20.00	9.000	23.00	12.25	0.00
2.583	10.00	5.833	20.00	9.083	13.00	12.33	0.00
2.667	10.00	5.917	20.00	9.167	13.00	12.42	0.00
2.750	10.00	6.000	20.00	9.250	13.00	12.50	0.00
2.833	10.00	6.083	43.00	9.333	13.00	12.58	0.00
2.917	10.00	6.167	43.00	9.417	13.00	12.67	0.00
3.000	10.00	6.250	43.00	9.500	13.00	12.75	0.00
3.083	3.00	6.333	43.00	9.583	13.00	12.83	0.00
3.167	3.00	6.417	43.00	9.667	13.00	12.92	0.00
3.250	3.00	6.500	43.00	9.750	13.00	13.00	0.00

Max.Eff.Inten.(mm/hr)=	43.00	42.91	
over (min)	5.00	10.00	
Storage Coeff. (min)=	1.64 (ii)	6.42 (ii)	
Unit Hyd. Tpeak (min)=	5.00	10.00	
Unit Hyd. peak (cms)=	0.32	0.14	
			TOTALS
PEAK FLOW (cms)=	0.01	0.00	0.013 (iii)
TIME TO PEAK (hrs)=	6.42	7.00	7.00
RUNOFF VOLUME (mm)=	192.00	186.45	191.19
TOTAL RAINFALL (mm)=	193.00	193.00	193.00
RUNOFF COEFFICIENT =	0.99	0.97	0.99

***** WARNING: STORAGE COEFF. IS SMALLER THAN TIME STEP!

(i) CN PROCEDURE SELECTED FOR PERVIOUS LOSSES:
CN* = 98.0 Ia = Dep. Storage (Above)
(ii) TIME STEP (DT) SHOULD BE SMALLER OR EQUAL
THAN THE STORAGE COEFFICIENT.
(iii) PEAK FLOW DOES NOT INCLUDE BASEFLOW IF ANY.

ADD HYD (22000)				
1 + 2 = 3	AREA (ha)	QPEAK (cms)	TPEAK (hrs)	R.V. (mm)
ID1= 1 (2200):	0.11	0.013	7.00	191.19
+ ID2= 2 (22001):	14.67	1.404	7.00	144.54
ID = 3 (22000):	14.78	1.417	7.00	144.88

NOTE: PEAK FLOWS DO NOT INCLUDE BASEFLOWS IF ANY.

CALIB			
NASHYD (2600)	Area (ha)= 2.14	Curve Number (CN)= 77.0	
ID= 1 DT= 5.0 min	Ia (mm)= 5.00	# of Linear Res.(N)= 3.00	
	U.H. Tp(hrs)= 0.28		

NOTE: RAINFALL WAS TRANSFORMED TO 5.0 MIN. TIME STEP.

---- TRANSFORMED HYETOGRAPH ----

TIME hrs	RAIN mm/hr	TIME hrs	RAIN mm/hr	TIME hrs	RAIN mm/hr	TIME hrs	RAIN mm/hr
0.083	15.00	3.333	3.00	6.583	43.00	9.83	13.00
0.167	15.00	3.417	3.00	6.667	43.00	9.92	13.00
0.250	15.00	3.500	3.00	6.750	43.00	10.00	13.00
0.333	15.00	3.583	3.00	6.833	43.00	10.08	13.00
0.417	15.00	3.667	3.00	6.917	43.00	10.17	13.00
0.500	15.00	3.750	3.00	7.000	43.00	10.25	13.00
0.583	15.00	3.833	3.00	7.083	20.00	10.33	13.00
0.667	15.00	3.917	3.00	7.167	20.00	10.42	13.00
0.750	15.00	4.000	3.00	7.250	20.00	10.50	13.00
0.833	15.00	4.083	5.00	7.333	20.00	10.58	13.00
0.917	15.00	4.167	5.00	7.417	20.00	10.67	13.00
1.000	15.00	4.250	5.00	7.500	20.00	10.75	13.00
1.083	20.00	4.333	5.00	7.583	20.00	10.83	13.00
1.167	20.00	4.417	5.00	7.667	20.00	10.92	13.00
1.250	20.00	4.500	5.00	7.750	20.00	11.00	13.00
1.333	20.00	4.583	5.00	7.833	20.00	11.08	8.00
1.417	20.00	4.667	5.00	7.917	20.00	11.17	8.00
1.500	20.00	4.750	5.00	8.000	20.00	11.25	8.00
1.583	20.00	4.833	5.00	8.083	23.00	11.33	8.00
1.667	20.00	4.917	5.00	8.167	23.00	11.42	8.00
1.750	20.00	5.000	5.00	8.250	23.00	11.50	8.00
1.833	20.00	5.083	20.00	8.333	23.00	11.58	8.00
1.917	20.00	5.167	20.00	8.417	23.00	11.67	8.00
2.000	20.00	5.250	20.00	8.500	23.00	11.75	8.00
2.083	10.00	5.333	20.00	8.583	23.00	11.83	8.00
2.167	10.00	5.417	20.00	8.667	23.00	11.92	8.00
2.250	10.00	5.500	20.00	8.750	23.00	12.00	8.00
2.333	10.00	5.583	20.00	8.833	23.00	12.08	0.00
2.417	10.00	5.667	20.00	8.917	23.00	12.17	0.00
2.500	10.00	5.750	20.00	9.000	23.00	12.25	0.00
2.583	10.00	5.833	20.00	9.083	13.00	12.33	0.00
2.667	10.00	5.917	20.00	9.167	13.00	12.42	0.00
2.750	10.00	6.000	20.00	9.250	13.00	12.50	0.00
2.833	10.00	6.083	43.00	9.333	13.00	12.58	0.00
2.917	10.00	6.167	43.00	9.417	13.00	12.67	0.00
3.000	10.00	6.250	43.00	9.500	13.00	12.75	0.00
3.083	3.00	6.333	43.00	9.583	13.00	12.83	0.00
3.167	3.00	6.417	43.00	9.667	13.00	12.92	0.00
3.250	3.00	6.500	43.00	9.750	13.00	13.00	0.00

Unit Hyd Qpeak (cms)= 0.292

PEAK FLOW (cms)= 0.202 (i)
TIME TO PEAK (hrs)= 7.000
RUNOFF VOLUME (mm)= 133.876
TOTAL RAINFALL (mm)= 193.000
RUNOFF COEFFICIENT = 0.694

(i) PEAK FLOW DOES NOT INCLUDE BASEFLOW IF ANY.

```
--------------------------------------------------------------------------------
--------------------
| CALIB              |
| NASHYD   (  2700)|   Area    (ha)=   6.38   Curve Number   (CN)= 77.0
|ID= 1 DT= 5.0 min |   Ia      (mm)=   5.00   # of Linear Res.(N)= 3.00
--------------------   U.H. Tp(hrs)=   0.29

        NOTE:  RAINFALL WAS TRANSFORMED TO   5.0 MIN. TIME STEP.
```

---- TRANSFORMED HYETOGRAPH ----

TIME hrs	RAIN mm/hr	TIME hrs	RAIN mm/hr	TIME hrs	RAIN mm/hr	TIME hrs	RAIN mm/hr
0.083	15.00	3.333	3.00	6.583	43.00	9.83	13.00
0.167	15.00	3.417	3.00	6.667	43.00	9.92	13.00
0.250	15.00	3.500	3.00	6.750	43.00	10.00	13.00
0.333	15.00	3.583	3.00	6.833	43.00	10.08	13.00
0.417	15.00	3.667	3.00	6.917	43.00	10.17	13.00
0.500	15.00	3.750	3.00	7.000	43.00	10.25	13.00
0.583	15.00	3.833	3.00	7.083	20.00	10.33	13.00
0.667	15.00	3.917	3.00	7.167	20.00	10.42	13.00
0.750	15.00	4.000	3.00	7.250	20.00	10.50	13.00
0.833	15.00	4.083	5.00	7.333	20.00	10.58	13.00
0.917	15.00	4.167	5.00	7.417	20.00	10.67	13.00
1.000	15.00	4.250	5.00	7.500	20.00	10.75	13.00
1.083	20.00	4.333	5.00	7.583	20.00	10.83	13.00
1.167	20.00	4.417	5.00	7.667	20.00	10.92	13.00
1.250	20.00	4.500	5.00	7.750	20.00	11.00	13.00
1.333	20.00	4.583	5.00	7.833	20.00	11.08	8.00
1.417	20.00	4.667	5.00	7.917	20.00	11.17	8.00
1.500	20.00	4.750	5.00	8.000	20.00	11.25	8.00
1.583	20.00	4.833	5.00	8.083	23.00	11.33	8.00
1.667	20.00	4.917	5.00	8.167	23.00	11.42	8.00
1.750	20.00	5.000	5.00	8.250	23.00	11.50	8.00
1.833	20.00	5.083	20.00	8.333	23.00	11.58	8.00
1.917	20.00	5.167	20.00	8.417	23.00	11.67	8.00
2.000	20.00	5.250	20.00	8.500	23.00	11.75	8.00
2.083	10.00	5.333	20.00	8.583	23.00	11.83	8.00
2.167	10.00	5.417	20.00	8.667	23.00	11.92	8.00
2.250	10.00	5.500	20.00	8.750	23.00	12.00	8.00
2.333	10.00	5.583	20.00	8.833	23.00	12.08	0.00
2.417	10.00	5.667	20.00	8.917	23.00	12.17	0.00
2.500	10.00	5.750	20.00	9.000	23.00	12.25	0.00
2.583	10.00	5.833	20.00	9.083	13.00	12.33	0.00
2.667	10.00	5.917	20.00	9.167	13.00	12.42	0.00
2.750	10.00	6.000	20.00	9.250	13.00	12.50	0.00
2.833	10.00	6.083	43.00	9.333	13.00	12.58	0.00
2.917	10.00	6.167	43.00	9.417	13.00	12.67	0.00
3.000	10.00	6.250	43.00	9.500	13.00	12.75	0.00
3.083	3.00	6.333	43.00	9.583	13.00	12.83	0.00
3.167	3.00	6.417	43.00	9.667	13.00	12.92	0.00
3.250	3.00	6.500	43.00	9.750	13.00	13.00	0.00

```
    Unit Hyd Qpeak  (cms)=   0.840

    PEAK FLOW       (cms)=   0.601 (i)
    TIME TO PEAK    (hrs)=   7.000
    RUNOFF VOLUME    (mm)= 133.885
    TOTAL RAINFALL   (mm)= 193.000
    RUNOFF COEFFICIENT   =   0.694

    (i) PEAK FLOW DOES NOT INCLUDE BASEFLOW IF ANY.
```

```
--------------------------------------------------------------------------------
--------------------
| CALIB              |
| NASHYD   (  2701)|   Area    (ha)=   4.55   Curve Number   (CN)= 75.0
|ID= 1 DT= 5.0 min |   Ia      (mm)=   5.00   # of Linear Res.(N)= 3.00
--------------------   U.H. Tp(hrs)=   0.50

        NOTE:  RAINFALL WAS TRANSFORMED TO   5.0 MIN. TIME STEP.
```

---- TRANSFORMED HYETOGRAPH ----

TIME hrs	RAIN mm/hr	TIME hrs	RAIN mm/hr	TIME hrs	RAIN mm/hr	TIME hrs	RAIN mm/hr
0.083	15.00	3.333	3.00	6.583	43.00	9.83	13.00
0.167	15.00	3.417	3.00	6.667	43.00	9.92	13.00
0.250	15.00	3.500	3.00	6.750	43.00	10.00	13.00
0.333	15.00	3.583	3.00	6.833	43.00	10.08	13.00
0.417	15.00	3.667	3.00	6.917	43.00	10.17	13.00
0.500	15.00	3.750	3.00	7.000	43.00	10.25	13.00
0.583	15.00	3.833	3.00	7.083	20.00	10.33	13.00
0.667	15.00	3.917	3.00	7.167	20.00	10.42	13.00
0.750	15.00	4.000	3.00	7.250	20.00	10.50	13.00
0.833	15.00	4.083	5.00	7.333	20.00	10.58	13.00
0.917	15.00	4.167	5.00	7.417	20.00	10.67	13.00
1.000	15.00	4.250	5.00	7.500	20.00	10.75	13.00
1.083	20.00	4.333	5.00	7.583	20.00	10.83	13.00
1.167	20.00	4.417	5.00	7.667	20.00	10.92	13.00
1.250	20.00	4.500	5.00	7.750	20.00	11.00	13.00
1.333	20.00	4.583	5.00	7.833	20.00	11.08	8.00
1.417	20.00	4.667	5.00	7.917	20.00	11.17	8.00
1.500	20.00	4.750	5.00	8.000	20.00	11.25	8.00
1.583	20.00	4.833	5.00	8.083	23.00	11.33	8.00
1.667	20.00	4.917	5.00	8.167	23.00	11.42	8.00
1.750	20.00	5.000	5.00	8.250	23.00	11.50	8.00
1.833	20.00	5.083	20.00	8.333	23.00	11.58	8.00
1.917	20.00	5.167	20.00	8.417	23.00	11.67	8.00
2.000	20.00	5.250	20.00	8.500	23.00	11.75	8.00
2.083	10.00	5.333	20.00	8.583	23.00	11.83	8.00
2.167	10.00	5.417	20.00	8.667	23.00	11.92	8.00
2.250	10.00	5.500	20.00	8.750	23.00	12.00	8.00
2.333	10.00	5.583	20.00	8.833	23.00	12.08	0.00
2.417	10.00	5.667	20.00	8.917	23.00	12.17	0.00
2.500	10.00	5.750	20.00	9.000	23.00	12.25	0.00
2.583	10.00	5.833	20.00	9.083	13.00	12.33	0.00
2.667	10.00	5.917	20.00	9.167	13.00	12.42	0.00
2.750	10.00	6.000	20.00	9.250	13.00	12.50	0.00
2.833	10.00	6.083	43.00	9.333	13.00	12.58	0.00
2.917	10.00	6.167	43.00	9.417	13.00	12.67	0.00
3.000	10.00	6.250	43.00	9.500	13.00	12.75	0.00
3.083	3.00	6.333	43.00	9.583	13.00	12.83	0.00
3.167	3.00	6.417	43.00	9.667	13.00	12.92	0.00
3.250	3.00	6.500	43.00	9.750	13.00	13.00	0.00

```
    Unit Hyd Qpeak  (cms)=   0.348

    PEAK FLOW       (cms)=   0.371 (i)
    TIME TO PEAK    (hrs)=   7.167
    RUNOFF VOLUME    (mm)= 129.617
    TOTAL RAINFALL   (mm)= 193.000
    RUNOFF COEFFICIENT   =   0.672

    (i) PEAK FLOW DOES NOT INCLUDE BASEFLOW IF ANY.

--------------------------------------------------------------------------------
```

```
-------------------
| CALIB           |
| NASHYD   (  2800)|   Area    (ha)=  16.90   Curve Number   (CN)= 75.0
|ID= 1 DT= 5.0 min |   Ia      (mm)=   5.00   # of Linear Res.(N)= 3.00
-------------------   U.H. Tp(hrs)=   0.73
```

NOTE: RAINFALL WAS TRANSFORMED TO 5.0 MIN. TIME STEP.

---- TRANSFORMED HYETOGRAPH ----

TIME hrs	RAIN mm/hr	TIME hrs	RAIN mm/hr	TIME hrs	RAIN mm/hr	TIME hrs	RAIN mm/hr
0.083	15.00	3.333	3.00	6.583	43.00	9.83	13.00
0.167	15.00	3.417	3.00	6.667	43.00	9.92	13.00
0.250	15.00	3.500	3.00	6.750	43.00	10.00	13.00
0.333	15.00	3.583	3.00	6.833	43.00	10.08	13.00
0.417	15.00	3.667	3.00	6.917	43.00	10.17	13.00
0.500	15.00	3.750	3.00	7.000	43.00	10.25	13.00
0.583	15.00	3.833	3.00	7.083	20.00	10.33	13.00
0.667	15.00	3.917	3.00	7.167	20.00	10.42	13.00
0.750	15.00	4.000	3.00	7.250	20.00	10.50	13.00
0.833	15.00	4.083	5.00	7.333	20.00	10.58	13.00
0.917	15.00	4.167	5.00	7.417	20.00	10.67	13.00
1.000	15.00	4.250	5.00	7.500	20.00	10.75	13.00
1.083	20.00	4.333	5.00	7.583	20.00	10.83	13.00
1.167	20.00	4.417	5.00	7.667	20.00	10.92	13.00
1.250	20.00	4.500	5.00	7.750	20.00	11.00	13.00
1.333	20.00	4.583	5.00	7.833	20.00	11.08	8.00
1.417	20.00	4.667	5.00	7.917	20.00	11.17	8.00
1.500	20.00	4.750	5.00	8.000	20.00	11.25	8.00
1.583	20.00	4.833	5.00	8.083	23.00	11.33	8.00
1.667	20.00	4.917	5.00	8.167	23.00	11.42	8.00
1.750	20.00	5.000	5.00	8.250	23.00	11.50	8.00
1.833	20.00	5.083	20.00	8.333	23.00	11.58	8.00
1.917	20.00	5.167	20.00	8.417	23.00	11.67	8.00
2.000	20.00	5.250	20.00	8.500	23.00	11.75	8.00
2.083	10.00	5.333	20.00	8.583	23.00	11.83	8.00
2.167	10.00	5.417	20.00	8.667	23.00	11.92	8.00
2.250	10.00	5.500	20.00	8.750	23.00	12.00	8.00
2.333	10.00	5.583	20.00	8.833	23.00	12.08	0.00
2.417	10.00	5.667	20.00	8.917	23.00	12.17	0.00
2.500	10.00	5.750	20.00	9.000	23.00	12.25	0.00
2.583	10.00	5.833	20.00	9.083	13.00	12.33	0.00
2.667	10.00	5.917	20.00	9.167	13.00	12.42	0.00
2.750	10.00	6.000	20.00	9.250	13.00	12.50	0.00
2.833	10.00	6.083	43.00	9.333	13.00	12.58	0.00
2.917	10.00	6.167	43.00	9.417	13.00	12.67	0.00
3.000	10.00	6.250	43.00	9.500	13.00	12.75	0.00
3.083	3.00	6.333	43.00	9.583	13.00	12.83	0.00
3.167	3.00	6.417	43.00	9.667	13.00	12.92	0.00
3.250	3.00	6.500	43.00	9.750	13.00	13.00	0.00

```
    Unit Hyd Qpeak  (cms)=   0.884

    PEAK FLOW       (cms)=   1.203 (i)
    TIME TO PEAK    (hrs)=   7.417
    RUNOFF VOLUME    (mm)= 129.622
    TOTAL RAINFALL   (mm)= 193.000
    RUNOFF COEFFICIENT   =   0.672

    (i) PEAK FLOW DOES NOT INCLUDE BASEFLOW IF ANY.

---------------------------------------------------------------------------
-------------------
```

```
| CALIB              |
| NASHYD   (  2900)|   Area    (ha)=  17.23   Curve Number   (CN)= 75.0
|ID= 1 DT= 5.0 min |   Ia      (mm)=   5.00   # of Linear Res.(N)= 3.00
--------------------   U.H. Tp(hrs)=   0.90

         NOTE:  RAINFALL WAS TRANSFORMED TO   5.0 MIN. TIME STEP.
```

---- TRANSFORMED HYETOGRAPH ----

TIME hrs	RAIN mm/hr	TIME hrs	RAIN mm/hr	TIME hrs	RAIN mm/hr	TIME hrs	RAIN mm/hr
0.083	15.00	3.333	3.00	6.583	43.00	9.83	13.00
0.167	15.00	3.417	3.00	6.667	43.00	9.92	13.00
0.250	15.00	3.500	3.00	6.750	43.00	10.00	13.00
0.333	15.00	3.583	3.00	6.833	43.00	10.08	13.00
0.417	15.00	3.667	3.00	6.917	43.00	10.17	13.00
0.500	15.00	3.750	3.00	7.000	43.00	10.25	13.00
0.583	15.00	3.833	3.00	7.083	20.00	10.33	13.00
0.667	15.00	3.917	3.00	7.167	20.00	10.42	13.00
0.750	15.00	4.000	3.00	7.250	20.00	10.50	13.00
0.833	15.00	4.083	5.00	7.333	20.00	10.58	13.00
0.917	15.00	4.167	5.00	7.417	20.00	10.67	13.00
1.000	15.00	4.250	5.00	7.500	20.00	10.75	13.00
1.083	20.00	4.333	5.00	7.583	20.00	10.83	13.00
1.167	20.00	4.417	5.00	7.667	20.00	10.92	13.00
1.250	20.00	4.500	5.00	7.750	20.00	11.00	13.00
1.333	20.00	4.583	5.00	7.833	20.00	11.08	8.00
1.417	20.00	4.667	5.00	7.917	20.00	11.17	8.00
1.500	20.00	4.750	5.00	8.000	20.00	11.25	8.00
1.583	20.00	4.833	5.00	8.083	23.00	11.33	8.00
1.667	20.00	4.917	5.00	8.167	23.00	11.42	8.00
1.750	20.00	5.000	5.00	8.250	23.00	11.50	8.00
1.833	20.00	5.083	20.00	8.333	23.00	11.58	8.00
1.917	20.00	5.167	20.00	8.417	23.00	11.67	8.00
2.000	20.00	5.250	20.00	8.500	23.00	11.75	8.00
2.083	10.00	5.333	20.00	8.583	23.00	11.83	8.00
2.167	10.00	5.417	20.00	8.667	23.00	11.92	8.00
2.250	10.00	5.500	20.00	8.750	23.00	12.00	8.00
2.333	10.00	5.583	20.00	8.833	23.00	12.08	0.00
2.417	10.00	5.667	20.00	8.917	23.00	12.17	0.00
2.500	10.00	5.750	20.00	9.000	23.00	12.25	0.00
2.583	10.00	5.833	20.00	9.083	13.00	12.33	0.00
2.667	10.00	5.917	20.00	9.167	13.00	12.42	0.00
2.750	10.00	6.000	20.00	9.250	13.00	12.50	0.00
2.833	10.00	6.083	43.00	9.333	13.00	12.58	0.00
2.917	10.00	6.167	43.00	9.417	13.00	12.67	0.00
3.000	10.00	6.250	43.00	9.500	13.00	12.75	0.00
3.083	3.00	6.333	43.00	9.583	13.00	12.83	0.00
3.167	3.00	6.417	43.00	9.667	13.00	12.92	0.00
3.250	3.00	6.500	43.00	9.750	13.00	13.00	0.00

```
    Unit Hyd Qpeak  (cms)=   0.731

    PEAK FLOW       (cms)=   1.125 (i)
    TIME TO PEAK    (hrs)=   7.583
    RUNOFF VOLUME    (mm)= 129.623
    TOTAL RAINFALL   (mm)= 193.000
    RUNOFF COEFFICIENT   =   0.672

    (i) PEAK FLOW DOES NOT INCLUDE BASEFLOW IF ANY.

--------------------------------------------------------------------------------
--------------------
| ROUTE CHN( 28001)|
```

| IN= 2---> OUT= 1 | Routing time step (min)'= 5.00

<------ DATA FOR SECTION (1.1) ------>

Distance	Elevation	Manning	
0.00	274.48	0.0800	
41.89	272.38	0.0800 /0.0350	Main Channel
46.88	272.13	0.0350	Main Channel
49.38	272.11	0.0350	Main Channel
54.86	272.30	0.0350 /0.0800	Main Channel
98.25	276.73	0.0800	

<---------- TRAVEL TIME TABLE ---------->

DEPTH (m)	ELEV (m)	VOLUME (cu.m.)	FLOW RATE (cms)	VELOCITY (m/s)	TRAV.TIME (min)
0.10	272.20	.336E+03	0.2	0.51	27.44
0.19	272.30	.106E+04	1.0	0.78	18.08
0.32	272.43	.249E+04	3.5	1.19	11.77
0.45	272.56	.434E+04	7.8	1.50	9.33
0.57	272.68	.660E+04	13.5	1.72	8.17
0.70	272.81	.927E+04	20.7	1.88	7.48
0.83	272.94	.124E+05	29.4	2.01	7.00
0.96	273.07	.158E+05	39.8	2.11	6.64
1.09	273.20	.198E+05	51.7	2.21	6.36
1.22	273.33	.241E+05	65.4	2.29	6.13
1.34	273.45	.288E+05	80.9	2.36	5.94
1.47	273.58	.339E+05	98.1	2.43	5.76
1.60	273.71	.395E+05	117.3	2.50	5.61
1.73	273.84	.455E+05	138.3	2.56	5.48
1.86	273.97	.518E+05	161.4	2.62	5.35
1.99	274.10	.586E+05	186.5	2.68	5.24
2.11	274.22	.658E+05	213.7	2.73	5.13
2.24	274.35	.734E+05	243.0	2.79	5.04
2.37	274.48	.815E+05	274.6	2.84	4.94

	<---- hydrograph ---->			<-pipe / channel->	
	AREA (ha)	QPEAK (cms)	TPEAK (hrs)	R.V. (mm)	MAX DEPTH (m)	MAX VEL (m/s)
INFLOW : ID= 2 (2900)	17.23	1.12	7.58	129.62	0.20	0.79
OUTFLOW: ID= 1 (28001)	17.23	1.10	7.92	129.62	0.20	0.79

ADD HYD (28000)
1 + 2 = 3

	AREA (ha)	QPEAK (cms)	TPEAK (hrs)	R.V. (mm)
ID1= 1 (2800):	16.90	1.203	7.42	129.62
+ ID2= 2 (28001):	17.23	1.098	7.92	129.62
ID = 3 (28000):	34.13	2.247	7.58	129.62

NOTE: PEAK FLOWS DO NOT INCLUDE BASEFLOWS IF ANY.

ADD HYD (0023)
1 + 2 = 3

	AREA (ha)	QPEAK (cms)	TPEAK (hrs)	R.V. (mm)
ID1= 1 (2701):	4.55	0.371	7.17	129.62
+ ID2= 2 (28000):	34.13	2.247	7.58	129.62
ID = 3 (0023):	38.68	2.571	7.50	129.62

NOTE: PEAK FLOWS DO NOT INCLUDE BASEFLOWS IF ANY.

| ROUTE CHN(27001)|
| IN= 2---> OUT= 1 | Routing time step (min)'= 5.00

<------ DATA FOR SECTION (1.1) ------>

Distance	Elevation	Manning	
0.00	262.89	0.0800	
21.45	262.29	0.0800 /0.0350	Main Channel
23.45	261.94	0.0350	Main Channel
27.44	261.99	0.0350	Main Channel
29.93	262.39	0.0350 /0.0800	Main Channel
71.84	264.85	0.0800	

<---------- TRAVEL TIME TABLE ---------->

DEPTH (m)	ELEV (m)	VOLUME (cu.m.)	FLOW RATE (cms)	VELOCITY (m/s)	TRAV.TIME (min)
0.05	261.99	.431E+02	0.0	0.23	29.33
0.10	262.04	.135E+03	0.2	0.45	14.94
0.15	262.09	.240E+03	0.4	0.61	11.04
0.20	262.14	.356E+03	0.7	0.74	9.09
0.25	262.19	.484E+03	1.0	0.85	7.89
0.30	262.24	.625E+03	1.5	0.95	7.05
0.35	262.29	.777E+03	2.0	1.05	6.43
0.40	262.34	.957E+03	2.7	1.14	5.92
0.45	262.39	.118E+04	3.5	1.19	5.65
0.50	262.44	.145E+04	4.5	1.24	5.40
0.55	262.49	.177E+04	5.6	1.27	5.27
0.60	262.54	.215E+04	6.9	1.29	5.20
0.65	262.59	.258E+04	8.3	1.30	5.17
0.70	262.64	.306E+04	9.9	1.31	5.14
0.75	262.69	.359E+04	11.7	1.31	5.12
0.80	262.74	.418E+04	13.7	1.32	5.10
0.85	262.79	.483E+04	15.8	1.32	5.08
0.90	262.84	.552E+04	18.2	1.33	5.06
0.95	262.89	.627E+04	20.7	1.33	5.04

		<---- hydrograph ---->			<-pipe / channel->	
	AREA (ha)	QPEAK (cms)	TPEAK (hrs)	R.V. (mm)	MAX DEPTH (m)	MAX VEL (m/s)
INFLOW : ID= 2 (0023)	38.68	2.57	7.50	129.62	0.39	1.12
OUTFLOW: ID= 1 (27001)	38.68	2.57	7.58	129.62	0.39	1.12

ADD HYD (27000)
1 + 2 = 3

	AREA (ha)	QPEAK (cms)	TPEAK (hrs)	R.V. (mm)
ID1= 1 (2700):	6.38	0.601	7.00	133.89
+ ID2= 2 (27001):	38.68	2.565	7.58	129.62
ID = 3 (27000):	45.06	2.960	7.42	130.22

NOTE: PEAK FLOWS DO NOT INCLUDE BASEFLOWS IF ANY.

CALIB					
NASHYD (2601)		Area	(ha)= 20.70	Curve Number	(CN)= 76.0
ID= 1 DT= 5.0 min		Ia	(mm)= 5.00	# of Linear Res.	(N)= 3.00

---------- U.H. Tp(hrs)= 0.44

NOTE: RAINFALL WAS TRANSFORMED TO 5.0 MIN. TIME STEP.

---- TRANSFORMED HYETOGRAPH ----

TIME hrs	RAIN mm/hr	TIME hrs	RAIN mm/hr	TIME hrs	RAIN mm/hr	TIME hrs	RAIN mm/hr
0.083	15.00	3.333	3.00	6.583	43.00	9.83	13.00
0.167	15.00	3.417	3.00	6.667	43.00	9.92	13.00
0.250	15.00	3.500	3.00	6.750	43.00	10.00	13.00
0.333	15.00	3.583	3.00	6.833	43.00	10.08	13.00
0.417	15.00	3.667	3.00	6.917	43.00	10.17	13.00
0.500	15.00	3.750	3.00	7.000	43.00	10.25	13.00
0.583	15.00	3.833	3.00	7.083	20.00	10.33	13.00
0.667	15.00	3.917	3.00	7.167	20.00	10.42	13.00
0.750	15.00	4.000	3.00	7.250	20.00	10.50	13.00
0.833	15.00	4.083	5.00	7.333	20.00	10.58	13.00
0.917	15.00	4.167	5.00	7.417	20.00	10.67	13.00
1.000	15.00	4.250	5.00	7.500	20.00	10.75	13.00
1.083	20.00	4.333	5.00	7.583	20.00	10.83	13.00
1.167	20.00	4.417	5.00	7.667	20.00	10.92	13.00
1.250	20.00	4.500	5.00	7.750	20.00	11.00	13.00
1.333	20.00	4.583	5.00	7.833	20.00	11.08	8.00
1.417	20.00	4.667	5.00	7.917	20.00	11.17	8.00
1.500	20.00	4.750	5.00	8.000	20.00	11.25	8.00
1.583	20.00	4.833	5.00	8.083	23.00	11.33	8.00
1.667	20.00	4.917	5.00	8.167	23.00	11.42	8.00
1.750	20.00	5.000	5.00	8.250	23.00	11.50	8.00
1.833	20.00	5.083	20.00	8.333	23.00	11.58	8.00
1.917	20.00	5.167	20.00	8.417	23.00	11.67	8.00
2.000	20.00	5.250	20.00	8.500	23.00	11.75	8.00
2.083	10.00	5.333	20.00	8.583	23.00	11.83	8.00
2.167	10.00	5.417	20.00	8.667	23.00	11.92	8.00
2.250	10.00	5.500	20.00	8.750	23.00	12.00	8.00
2.333	10.00	5.583	20.00	8.833	23.00	12.08	0.00
2.417	10.00	5.667	20.00	8.917	23.00	12.17	0.00
2.500	10.00	5.750	20.00	9.000	23.00	12.25	0.00
2.583	10.00	5.833	20.00	9.083	13.00	12.33	0.00
2.667	10.00	5.917	20.00	9.167	13.00	12.42	0.00
2.750	10.00	6.000	20.00	9.250	13.00	12.50	0.00
2.833	10.00	6.083	43.00	9.333	13.00	12.58	0.00
2.917	10.00	6.167	43.00	9.417	13.00	12.67	0.00
3.000	10.00	6.250	43.00	9.500	13.00	12.75	0.00
3.083	3.00	6.333	43.00	9.583	13.00	12.83	0.00
3.167	3.00	6.417	43.00	9.667	13.00	12.92	0.00
3.250	3.00	6.500	43.00	9.750	13.00	13.00	0.00

Unit Hyd Qpeak (cms)= 1.797

PEAK FLOW (cms)= 1.776 (i)
TIME TO PEAK (hrs)= 7.083
RUNOFF VOLUME (mm)= 131.766
TOTAL RAINFALL (mm)= 193.000
RUNOFF COEFFICIENT = 0.683

(i) PEAK FLOW DOES NOT INCLUDE BASEFLOW IF ANY.

ADD HYD (0022)
1 + 2 = 3

	AREA (ha)	QPEAK (cms)	TPEAK (hrs)	R.V. (mm)

```
       ID1= 1 (  2601):    20.70   1.776     7.08   131.77
     + ID2= 2 ( 27000):    45.06   2.960     7.42   130.22
       ================================================
       ID = 3 (  0022):    65.76   4.638     7.25   130.71

     NOTE:  PEAK FLOWS DO NOT INCLUDE BASEFLOWS IF ANY.
--------------------------------------------------------------------------------
--------------------
| ROUTE CHN( 26001)|
| IN= 2---> OUT= 1 |     Routing time step (min)'=  5.00
--------------------
               <------ DATA FOR SECTION (   1.1) ------>
               Distance      Elevation       Manning
                   5.49        259.50        0.0800
                  11.98        259.28    0.0800 /0.0350  Main Channel
                  14.97        259.08        0.0350      Main Channel
                  17.96        259.05        0.0350      Main Channel
                  22.95        259.62    0.0350 /0.0800  Main Channel
                  42.42        259.98        0.0800

      <--------------------- TRAVEL TIME TABLE ---------------------->
       DEPTH    ELEV      VOLUME    FLOW RATE    VELOCITY   TRAV.TIME
        (m)      (m)     (cu.m.)      (cms)        (m/s)      (min)
       0.02   259.07    .133E+02       0.0          0.09      87.17
       0.05   259.10    .481E+02       0.0          0.16      47.50
       0.07   259.12    .896E+02       0.0          0.22      34.43
       0.09   259.14    .137E+03       0.1          0.27      28.16
       0.11   259.16    .190E+03       0.1          0.32      24.35
       0.14   259.19    .249E+03       0.2          0.36      21.72
       0.16   259.21    .314E+03       0.3          0.39      19.76
       0.18   259.23    .384E+03       0.4          0.42      18.24
       0.21   259.26    .461E+03       0.5          0.45      17.01
       0.23   259.28    .543E+03       0.6          0.48      15.98
       0.25   259.30    .633E+03       0.7          0.52      14.81
       0.28   259.33    .738E+03       0.9          0.55      13.92
       0.30   259.35    .855E+03       1.1          0.58      13.25
       0.33   259.38    .981E+03       1.3          0.61      12.73
       0.35   259.40    .112E+04       1.5          0.63      12.32
       0.38   259.43    .127E+04       1.8          0.64      11.97
       0.40   259.45    .143E+04       2.0          0.66      11.68
       0.42   259.47    .159E+04       2.3          0.68      11.43
       0.45   259.50    .177E+04       2.6          0.69      11.21

     **** WARNING:  TRAVEL TIME TABLE EXCEEDED
                                      <---- hydrograph ---->   <-pipe / channel->
                                AREA    QPEAK   TPEAK   R.V.   MAX DEPTH  MAX VEL
                                (ha)    (cms)   (hrs)   (mm)      (m)       (m/s)
    INFLOW : ID= 2 (  0022)   65.76     4.64    7.25 130.71      0.45       0.69
    OUTFLOW: ID= 1 ( 26001)   65.76     4.50    7.42 130.70      0.45       0.69



--------------------------------------------------------------------------------

--------------------
| ADD HYD  ( 26000)|
|   1 +  2 =  3    |         AREA    QPEAK    TPEAK     R.V.
--------------------         (ha)    (cms)    (hrs)     (mm)
       ID1= 1 (  2600):     2.14   0.202     7.00   133.88
     + ID2= 2 ( 26001):    65.76   4.504     7.42   130.70
       ================================================
       ID = 3 ( 26000):    67.90   4.643     7.42   130.80

     NOTE:  PEAK FLOWS DO NOT INCLUDE BASEFLOWS IF ANY.
```

```
--------------------------------------------------------------------------------
--------------------
| CALIB            |
| STANDHYD (  2501)|   Area    (ha)=   4.86
|ID= 1 DT= 5.0 min |   Total Imp(%)=  53.00   Dir. Conn.(%)=  18.00
--------------------
                           IMPERVIOUS    PERVIOUS (i)
     Surface Area     (ha)=       2.58          2.28
     Dep. Storage     (mm)=       1.00          1.50
     Average Slope     (%)=       1.00          2.00
     Length            (m)=     180.00         40.00
     Mannings n             =     0.013         0.250

         NOTE:  RAINFALL WAS TRANSFORMED TO   5.0 MIN. TIME STEP.


                          ---- TRANSFORMED HYETOGRAPH ----
               TIME     RAIN |   TIME     RAIN |'  TIME     RAIN |  TIME     RAIN
                hrs    mm/hr |    hrs    mm/hr |'   hrs    mm/hr |   hrs    mm/hr
              0.083    15.00 | 3.333     3.00 | 6.583    43.00 |  9.83    13.00
              0.167    15.00 | 3.417     3.00 | 6.667    43.00 |  9.92    13.00
              0.250    15.00 | 3.500     3.00 | 6.750    43.00 | 10.00    13.00
              0.333    15.00 | 3.583     3.00 | 6.833    43.00 | 10.08    13.00
              0.417    15.00 | 3.667     3.00 | 6.917    43.00 | 10.17    13.00
              0.500    15.00 | 3.750     3.00 | 7.000    43.00 | 10.25    13.00
              0.583    15.00 | 3.833     3.00 | 7.083    20.00 | 10.33    13.00
              0.667    15.00 | 3.917     3.00 | 7.167    20.00 | 10.42    13.00
              0.750    15.00 | 4.000     3.00 | 7.250    20.00 | 10.50    13.00
              0.833    15.00 | 4.083     5.00 | 7.333    20.00 | 10.58    13.00
              0.917    15.00 | 4.167     5.00 | 7.417    20.00 | 10.67    13.00
              1.000    15.00 | 4.250     5.00 | 7.500    20.00 | 10.75    13.00
              1.083    20.00 | 4.333     5.00 | 7.583    20.00 | 10.83    13.00
              1.167    20.00 | 4.417     5.00 | 7.667    20.00 | 10.92    13.00
              1.250    20.00 | 4.500     5.00 | 7.750    20.00 | 11.00    13.00
              1.333    20.00 | 4.583     5.00 | 7.833    20.00 | 11.08     8.00
              1.417    20.00 | 4.667     5.00 | 7.917    20.00 | 11.17     8.00
              1.500    20.00 | 4.750     5.00 | 8.000    20.00 | 11.25     8.00
              1.583    20.00 | 4.833     5.00 | 8.083    23.00 | 11.33     8.00
              1.667    20.00 | 4.917     5.00 | 8.167    23.00 | 11.42     8.00
              1.750    20.00 | 5.000     5.00 | 8.250    23.00 | 11.50     8.00
              1.833    20.00 | 5.083    20.00 | 8.333    23.00 | 11.58     8.00
              1.917    20.00 | 5.167    20.00 | 8.417    23.00 | 11.67     8.00
              2.000    20.00 | 5.250    20.00 | 8.500    23.00 | 11.75     8.00
              2.083    10.00 | 5.333    20.00 | 8.583    23.00 | 11.83     8.00
              2.167    10.00 | 5.417    20.00 | 8.667    23.00 | 11.92     8.00
              2.250    10.00 | 5.500    20.00 | 8.750    23.00 | 12.00     8.00
              2.333    10.00 | 5.583    20.00 | 8.833    23.00 | 12.08     0.00
              2.417    10.00 | 5.667    20.00 | 8.917    23.00 | 12.17     0.00
              2.500    10.00 | 5.750    20.00 | 9.000    23.00 | 12.25     0.00
              2.583    10.00 | 5.833    20.00 | 9.083    13.00 | 12.33     0.00
              2.667    10.00 | 5.917    20.00 | 9.167    13.00 | 12.42     0.00
              2.750    10.00 | 6.000    20.00 | 9.250    13.00 | 12.50     0.00
              2.833    10.00 | 6.083    43.00 | 9.333    13.00 | 12.58     0.00
              2.917    10.00 | 6.167    43.00 | 9.417    13.00 | 12.67     0.00
              3.000    10.00 | 6.250    43.00 | 9.500    13.00 | 12.75     0.00
              3.083     3.00 | 6.333    43.00 | 9.583    13.00 | 12.83     0.00
              3.167     3.00 | 6.417    43.00 | 9.667    13.00 | 12.92     0.00
              3.250     3.00 | 6.500    43.00 | 9.750    13.00 | 13.00     0.00

     Max.Eff.Inten.(mm/hr)=      43.00         71.68
               over (min)         5.00         15.00
     Storage Coeff.  (min)=       5.09 (ii)    13.16 (ii)
     Unit Hyd. Tpeak (min)=       5.00         15.00
     Unit Hyd. peak  (cms)=       0.21          0.08
```

			TOTALS
PEAK FLOW (cms)=	0.10	0.45	0.552 (iii)
TIME TO PEAK (hrs)=	6.92	7.00	7.00
RUNOFF VOLUME (mm)=	192.00	166.33	170.95
TOTAL RAINFALL (mm)=	193.00	193.00	193.00
RUNOFF COEFFICIENT =	0.99	0.86	0.89

***** WARNING:FOR AREAS WITH IMPERVIOUS RATIOS BELOW 20%
YOU SHOULD CONSIDER SPLITTING THE AREA.

(i) CN PROCEDURE SELECTED FOR PERVIOUS LOSSES:
CN* = 83.0 Ia = Dep. Storage (Above)
(ii) TIME STEP (DT) SHOULD BE SMALLER OR EQUAL
THAN THE STORAGE COEFFICIENT.
(iii) PEAK FLOW DOES NOT INCLUDE BASEFLOW IF ANY.

ADD HYD (0021)|	AREA	QPEAK	TPEAK	R.V.
1 + 2 = 3		(ha)	(cms)	(hrs)	(mm)
ID1= 1 (2501):		4.86	0.552	7.00	170.95
+ ID2= 2 (26000):		67.90	4.643	7.42	130.80
ID = 3 (0021):		72.76	4.971	7.33	133.48

NOTE: PEAK FLOWS DO NOT INCLUDE BASEFLOWS IF ANY.

ROUTE CHN(25001)	
IN= 2---> OUT= 1	Routing time step (min)'= 5.00

<------ DATA FOR SECTION (1.1) ------>

Distance	Elevation	Manning	
23.45	258.56	0.0800	
26.94	257.29	0.0800 /0.0350	Main Channel
27.44	257.14	0.0350	Main Channel
27.94	257.11	0.0350	Main Channel
29.43	257.30	0.0350 /0.0800	Main Channel
50.38	257.36	0.0800	

<---------- TRAVEL TIME TABLE ---------->

DEPTH (m)	ELEV (m)	VOLUME (cu.m.)	FLOW RATE (cms)	VELOCITY (m/s)	TRAV.TIME (min)
0.01	257.12	.497E+00	0.0	0.06	72.24
0.03	257.14	.199E+01	0.0	0.09	45.51
0.04	257.15	.435E+01	0.0	0.13	32.50
0.05	257.16	.720E+01	0.0	0.16	25.87
0.06	257.17	.105E+02	0.0	0.19	22.07
0.08	257.19	.142E+02	0.0	0.21	19.52
0.09	257.20	.185E+02	0.0	0.23	17.67
0.10	257.21	.231E+02	0.0	0.25	16.23
0.12	257.23	.282E+02	0.0	0.27	15.08
0.13	257.24	.338E+02	0.0	0.29	14.13
0.14	257.25	.398E+02	0.0	0.31	13.32
0.15	257.26	.463E+02	0.1	0.32	12.63
0.17	257.28	.532E+02	0.1	0.34	12.02
0.18	257.29	.606E+02	0.1	0.36	11.49
0.19	257.30	.698E+02	0.1	0.38	10.87
0.21	257.32	.916E+02	0.1	0.35	11.60
0.22	257.33	.130E+03	0.2	0.31	13.34
0.24	257.35	.186E+03	0.2	0.27	15.30
0.25	257.36	.259E+03	0.3	0.24	17.04

**** WARNING: TRAVEL TIME TABLE EXCEEDED

	AREA (ha)	<---- hydrograph ----> QPEAK (cms)	TPEAK (hrs)	R.V. (mm)	<-pipe / channel-> MAX DEPTH (m)	MAX VEL (m/s)
INFLOW : ID= 2 (0021)	72.76	4.97	7.33	133.48	0.25	0.24
OUTFLOW: ID= 1 (25001)	72.76	4.83	7.58	133.48	0.25	0.24

CALIB STANDHYD (2500) ID= 1 DT= 5.0 min	Area (ha)= 4.12 Total Imp(%)= 45.00 Dir. Conn.(%)= 30.00

		IMPERVIOUS	PERVIOUS (i)
Surface Area	(ha)=	1.85	2.27
Dep. Storage	(mm)=	1.00	1.50
Average Slope	(%)=	1.00	2.00
Length	(m)=	165.73	40.00
Mannings n	=	0.013	0.250

NOTE: RAINFALL WAS TRANSFORMED TO 5.0 MIN. TIME STEP.

---- TRANSFORMED HYETOGRAPH ----

TIME hrs	RAIN mm/hr	TIME hrs	RAIN mm/hr	TIME hrs	RAIN mm/hr	TIME hrs	RAIN mm/hr
0.083	15.00	3.333	3.00	6.583	43.00	9.83	13.00
0.167	15.00	3.417	3.00	6.667	43.00	9.92	13.00
0.250	15.00	3.500	3.00	6.750	43.00	10.00	13.00
0.333	15.00	3.583	3.00	6.833	43.00	10.08	13.00
0.417	15.00	3.667	3.00	6.917	43.00	10.17	13.00
0.500	15.00	3.750	3.00	7.000	43.00	10.25	13.00
0.583	15.00	3.833	3.00	7.083	20.00	10.33	13.00
0.667	15.00	3.917	3.00	7.167	20.00	10.42	13.00
0.750	15.00	4.000	3.00	7.250	20.00	10.50	13.00
0.833	15.00	4.083	5.00	7.333	20.00	10.58	13.00
0.917	15.00	4.167	5.00	7.417	20.00	10.67	13.00
1.000	15.00	4.250	5.00	7.500	20.00	10.75	13.00
1.083	20.00	4.333	5.00	7.583	20.00	10.83	13.00
1.167	20.00	4.417	5.00	7.667	20.00	10.92	13.00
1.250	20.00	4.500	5.00	7.750	20.00	11.00	13.00
1.333	20.00	4.583	5.00	7.833	20.00	11.08	8.00
1.417	20.00	4.667	5.00	7.917	20.00	11.17	8.00
1.500	20.00	4.750	5.00	8.000	20.00	11.25	8.00
1.583	20.00	4.833	5.00	8.083	23.00	11.33	8.00
1.667	20.00	4.917	5.00	8.167	23.00	11.42	8.00
1.750	20.00	5.000	5.00	8.250	23.00	11.50	8.00
1.833	20.00	5.083	20.00	8.333	23.00	11.58	8.00
1.917	20.00	5.167	20.00	8.417	23.00	11.67	8.00
2.000	20.00	5.250	20.00	8.500	23.00	11.75	8.00
2.083	10.00	5.333	20.00	8.583	23.00	11.83	8.00
2.167	10.00	5.417	20.00	8.667	23.00	11.92	8.00
2.250	10.00	5.500	20.00	8.750	23.00	12.00	8.00
2.333	10.00	5.583	20.00	8.833	23.00	12.08	0.00
2.417	10.00	5.667	20.00	8.917	23.00	12.17	0.00
2.500	10.00	5.750	20.00	9.000	23.00	12.25	0.00
2.583	10.00	5.833	20.00	9.083	13.00	12.33	0.00
2.667	10.00	5.917	20.00	9.167	13.00	12.42	0.00
2.750	10.00	6.000	20.00	9.250	13.00	12.50	0.00
2.833	10.00	6.083	43.00	9.333	13.00	12.58	0.00
2.917	10.00	6.167	43.00	9.417	13.00	12.67	0.00

3.000	10.00	6.250	43.00	9.500	13.00	12.75	0.00
3.083	3.00	6.333	43.00	9.583	13.00	12.83	0.00
3.167	3.00	6.417	43.00	9.667	13.00	12.92	0.00
3.250	3.00	6.500	43.00	9.750	13.00	13.00	0.00

			TOTALS
Max.Eff.Inten.(mm/hr)=	43.00	48.06	
over (min)	5.00	15.00	
Storage Coeff. (min)=	4.85 (ii)	14.31 (ii)	
Unit Hyd. Tpeak (min)=	5.00	15.00	
Unit Hyd. peak (cms)=	0.22	0.08	
PEAK FLOW (cms)=	0.15	0.29	0.440 (iii)
TIME TO PEAK (hrs)=	6.92	7.00	7.00
RUNOFF VOLUME (mm)=	192.00	146.34	160.04
TOTAL RAINFALL (mm)=	193.00	193.00	193.00
RUNOFF COEFFICIENT =	0.99	0.76	0.83

***** WARNING: STORAGE COEFF. IS SMALLER THAN TIME STEP!

(i) CN PROCEDURE SELECTED FOR PERVIOUS LOSSES:
CN* = 77.0 Ia = Dep. Storage (Above)
(ii) TIME STEP (DT) SHOULD BE SMALLER OR EQUAL
THAN THE STORAGE COEFFICIENT.
(iii) PEAK FLOW DOES NOT INCLUDE BASEFLOW IF ANY.

ADD HYD (25000)		AREA	QPEAK	TPEAK	R.V.
		(ha)	(cms)	(hrs)	(mm)
1 + 2 = 3	ID1= 1 (2500):	4.12	0.440	7.00	160.04
	+ ID2= 2 (25001):	72.76	4.833	7.58	133.48
	ID = 3 (25000):	76.88	5.065	7.58	134.90

NOTE: PEAK FLOWS DO NOT INCLUDE BASEFLOWS IF ANY.

CALIB STANDHYD (2401) | Area (ha)= 4.17
ID= 1 DT= 5.0 min | Total Imp(%)= 87.00 Dir. Conn.(%)= 29.00

		IMPERVIOUS	PERVIOUS (i)
Surface Area	(ha)=	3.63	0.54
Dep. Storage	(mm)=	1.00	1.50
Average Slope	(%)=	1.00	2.00
Length	(m)=	166.73	40.00
Mannings n	=	0.013	0.250

NOTE: RAINFALL WAS TRANSFORMED TO 5.0 MIN. TIME STEP.

---- TRANSFORMED HYETOGRAPH ----

TIME hrs	RAIN mm/hr	TIME hrs	RAIN mm/hr	TIME hrs	RAIN mm/hr	TIME hrs	RAIN mm/hr
0.083	15.00	3.333	3.00	6.583	43.00	9.83	13.00
0.167	15.00	3.417	3.00	6.667	43.00	9.92	13.00
0.250	15.00	3.500	3.00	6.750	43.00	10.00	13.00
0.333	15.00	3.583	3.00	6.833	43.00	10.08	13.00
0.417	15.00	3.667	3.00	6.917	43.00	10.17	13.00
0.500	15.00	3.750	3.00	7.000	43.00	10.25	13.00
0.583	15.00	3.833	3.00	7.083	20.00	10.33	13.00
0.667	15.00	3.917	3.00	7.167	20.00	10.42	13.00

0.750	15.00	4.000	3.00	7.250	20.00	10.50	13.00
0.833	15.00	4.083	5.00	7.333	20.00	10.58	13.00
0.917	15.00	4.167	5.00	7.417	20.00	10.67	13.00
1.000	15.00	4.250	5.00	7.500	20.00	10.75	13.00
1.083	20.00	4.333	5.00	7.583	20.00	10.83	13.00
1.167	20.00	4.417	5.00	7.667	20.00	10.92	13.00
1.250	20.00	4.500	5.00	7.750	20.00	11.00	13.00
1.333	20.00	4.583	5.00	7.833	20.00	11.08	8.00
1.417	20.00	4.667	5.00	7.917	20.00	11.17	8.00
1.500	20.00	4.750	5.00	8.000	20.00	11.25	8.00
1.583	20.00	4.833	5.00	8.083	23.00	11.33	8.00
1.667	20.00	4.917	5.00	8.167	23.00	11.42	8.00
1.750	20.00	5.000	5.00	8.250	23.00	11.50	8.00
1.833	20.00	5.083	20.00	8.333	23.00	11.58	8.00
1.917	20.00	5.167	20.00	8.417	23.00	11.67	8.00
2.000	20.00	5.250	20.00	8.500	23.00	11.75	8.00
2.083	10.00	5.333	20.00	8.583	23.00	11.83	8.00
2.167	10.00	5.417	20.00	8.667	23.00	11.92	8.00
2.250	10.00	5.500	20.00	8.750	23.00	12.00	8.00
2.333	10.00	5.583	20.00	8.833	23.00	12.08	0.00
2.417	10.00	5.667	20.00	8.917	23.00	12.17	0.00
2.500	10.00	5.750	20.00	9.000	23.00	12.25	0.00
2.583	10.00	5.833	20.00	9.083	13.00	12.33	0.00
2.667	10.00	5.917	20.00	9.167	13.00	12.42	0.00
2.750	10.00	6.000	20.00	9.250	13.00	12.50	0.00
2.833	10.00	6.083	43.00	9.333	13.00	12.58	0.00
2.917	10.00	6.167	43.00	9.417	13.00	12.67	0.00
3.000	10.00	6.250	43.00	9.500	13.00	12.75	0.00
3.083	3.00	6.333	43.00	9.583	13.00	12.83	0.00
3.167	3.00	6.417	43.00	9.667	13.00	12.92	0.00
3.250	3.00	6.500	43.00	9.750	13.00	13.00	0.00

Max.Eff.Inten.(mm/hr)=	43.00	234.81		
over (min)	5.00	10.00		
Storage Coeff. (min)=	4.87 (ii)	9.88 (ii)		
Unit Hyd. Tpeak (min)=	5.00	10.00		
Unit Hyd. peak (cms)=	0.22	0.11		
			TOTALS	
PEAK FLOW (cms)=	0.14	0.35	0.497 (iii)	
TIME TO PEAK (hrs)=	6.92	7.00	7.00	
RUNOFF VOLUME (mm)=	192.00	191.30	191.50	
TOTAL RAINFALL (mm)=	193.00	193.00	193.00	
RUNOFF COEFFICIENT =	0.99	0.99	0.99	

***** WARNING: STORAGE COEFF. IS SMALLER THAN TIME STEP!

(i) CN PROCEDURE SELECTED FOR PERVIOUS LOSSES:
CN* = 97.0 Ia = Dep. Storage (Above)
(ii) TIME STEP (DT) SHOULD BE SMALLER OR EQUAL
THAN THE STORAGE COEFFICIENT.
(iii) PEAK FLOW DOES NOT INCLUDE BASEFLOW IF ANY.

ADD HYD (0020)		AREA	QPEAK	TPEAK	R.V.
1 + 2 = 3		(ha)	(cms)	(hrs)	(mm)
ID1= 1 (2401):		4.17	0.497	7.00	191.50
+ ID2= 2 (25000):		76.88	5.065	7.58	134.90
ID = 3 (0020):		81.05	5.305	7.58	137.81

NOTE: PEAK FLOWS DO NOT INCLUDE BASEFLOWS IF ANY.

```
| ROUTE CHN( 24001)|
| IN= 2---> OUT= 1 |     Routing time step (min)'=  5.00
```

<------ DATA FOR SECTION (1.1) ------>

Distance	Elevation	Manning	
0.00	256.91	0.0800	
30.30	256.72	0.0800 /0.0350	Main Channel
35.77	256.32	0.0350	Main Channel
37.26	256.30	0.0350	Main Channel
40.74	256.75	0.0350 /0.0800	Main Channel
71.50	257.50	0.0800	

<---------- TRAVEL TIME TABLE ---------->

DEPTH (m)	ELEV (m)	VOLUME (cu.m.)	FLOW RATE (cms)	VELOCITY (m/s)	TRAV.TIME (min)
0.03	256.33	.464E+01	0.0	0.08	29.70
0.06	256.36	.136E+02	0.0	0.13	17.71
0.09	256.39	.252E+02	0.0	0.17	13.68
0.12	256.42	.394E+02	0.1	0.20	11.49
0.15	256.45	.562E+02	0.1	0.23	10.06
0.18	256.48	.757E+02	0.1	0.25	9.03
0.21	256.51	.978E+02	0.2	0.28	8.24
0.24	256.54	.123E+03	0.3	0.30	7.62
0.27	256.57	.150E+03	0.4	0.32	7.10
0.30	256.60	.180E+03	0.5	0.34	6.67
0.33	256.63	.213E+03	0.6	0.36	6.29
0.36	256.66	.248E+03	0.7	0.38	5.97
0.39	256.69	.286E+03	0.8	0.40	5.69
0.42	256.72	.326E+03	1.0	0.42	5.44
0.46	256.76	.396E+03	1.3	0.44	5.18
0.50	256.80	.504E+03	1.6	0.44	5.20
0.53	256.83	.650E+03	2.0	0.42	5.38
0.57	256.87	.837E+03	2.5	0.41	5.61
0.61	256.91	.106E+04	3.0	0.39	5.84

**** WARNING: TRAVEL TIME TABLE EXCEEDED

	<---- hydrograph ---->			<-pipe / channel->	
	AREA (ha)	QPEAK (cms)	TPEAK (hrs)	R.V. (mm)	MAX DEPTH (m)	MAX VEL (m/s)
INFLOW : ID= 2 (0020)	81.05	5.30	7.58	137.81	0.61	0.39
OUTFLOW: ID= 1 (24001)	81.05	5.29	7.67	137.81	0.60	0.39

```
| CALIB             |
| STANDHYD (  2400)|   Area    (ha)=   2.47
|ID= 1 DT= 5.0 min |   Total Imp(%)=  26.00   Dir. Conn.(%)=  15.00
```

		IMPERVIOUS	PERVIOUS (i)
Surface Area	(ha)=	0.64	1.83
Dep. Storage	(mm)=	1.00	1.50
Average Slope	(%)=	1.00	2.00
Length	(m)=	128.32	40.00
Mannings n	=	0.013	0.250

NOTE: RAINFALL WAS TRANSFORMED TO   5.0 MIN. TIME STEP.

---- TRANSFORMED HYETOGRAPH ----

TIME	RAIN	TIME	RAIN	TIME	RAIN	TIME	RAIN

hrs	mm/hr	hrs	mm/hr	hrs	mm/hr	hrs	mm/hr
0.083	15.00	3.333	3.00	6.583	43.00	9.83	13.00
0.167	15.00	3.417	3.00	6.667	43.00	9.92	13.00
0.250	15.00	3.500	3.00	6.750	43.00	10.00	13.00
0.333	15.00	3.583	3.00	6.833	43.00	10.08	13.00
0.417	15.00	3.667	3.00	6.917	43.00	10.17	13.00
0.500	15.00	3.750	3.00	7.000	43.00	10.25	13.00
0.583	15.00	3.833	3.00	7.083	20.00	10.33	13.00
0.667	15.00	3.917	3.00	7.167	20.00	10.42	13.00
0.750	15.00	4.000	3.00	7.250	20.00	10.50	13.00
0.833	15.00	4.083	5.00	7.333	20.00	10.58	13.00
0.917	15.00	4.167	5.00	7.417	20.00	10.67	13.00
1.000	15.00	4.250	5.00	7.500	20.00	10.75	13.00
1.083	20.00	4.333	5.00	7.583	20.00	10.83	13.00
1.167	20.00	4.417	5.00	7.667	20.00	10.92	13.00
1.250	20.00	4.500	5.00	7.750	20.00	11.00	13.00
1.333	20.00	4.583	5.00	7.833	20.00	11.08	8.00
1.417	20.00	4.667	5.00	7.917	20.00	11.17	8.00
1.500	20.00	4.750	5.00	8.000	20.00	11.25	8.00
1.583	20.00	4.833	5.00	8.083	23.00	11.33	8.00
1.667	20.00	4.917	5.00	8.167	23.00	11.42	8.00
1.750	20.00	5.000	5.00	8.250	23.00	11.50	8.00
1.833	20.00	5.083	20.00	8.333	23.00	11.58	8.00
1.917	20.00	5.167	20.00	8.417	23.00	11.67	8.00
2.000	20.00	5.250	20.00	8.500	23.00	11.75	8.00
2.083	10.00	5.333	20.00	8.583	23.00	11.83	8.00
2.167	10.00	5.417	20.00	8.667	23.00	11.92	8.00
2.250	10.00	5.500	20.00	8.750	23.00	12.00	8.00
2.333	10.00	5.583	20.00	8.833	23.00	12.08	0.00
2.417	10.00	5.667	20.00	8.917	23.00	12.17	0.00
2.500	10.00	5.750	20.00	9.000	23.00	12.25	0.00
2.583	10.00	5.833	20.00	9.083	13.00	12.33	0.00
2.667	10.00	5.917	20.00	9.167	13.00	12.42	0.00
2.750	10.00	6.000	20.00	9.250	13.00	12.50	0.00
2.833	10.00	6.083	43.00	9.333	13.00	12.58	0.00
2.917	10.00	6.167	43.00	9.417	13.00	12.67	0.00
3.000	10.00	6.250	43.00	9.500	13.00	12.75	0.00
3.083	3.00	6.333	43.00	9.583	13.00	12.83	0.00
3.167	3.00	6.417	43.00	9.667	13.00	12.92	0.00
3.250	3.00	6.500	43.00	9.750	13.00	13.00	0.00

Max.Eff.Inten.(mm/hr)=	43.00	38.73	
over (min)	5.00	15.00	
Storage Coeff. (min)=	4.16 (ii)	14.47 (ii)	
Unit Hyd. Tpeak (min)=	5.00	15.00	
Unit Hyd. peak (cms)=	0.24	0.08	
			TOTALS
PEAK FLOW (cms)=	0.04	0.19	0.233 (iii)
TIME TO PEAK (hrs)=	6.92	7.00	7.00
RUNOFF VOLUME (mm)=	192.00	128.28	137.83
TOTAL RAINFALL (mm)=	193.00	193.00	193.00
RUNOFF COEFFICIENT =	0.99	0.66	0.71

***** WARNING: STORAGE COEFF. IS SMALLER THAN TIME STEP!
***** WARNING:FOR AREAS WITH IMPERVIOUS RATIOS BELOW 20%
YOU SHOULD CONSIDER SPLITTING THE AREA.

(i) CN PROCEDURE SELECTED FOR PERVIOUS LOSSES:
CN* = 70.0 Ia = Dep. Storage (Above)
(ii) TIME STEP (DT) SHOULD BE SMALLER OR EQUAL
THAN THE STORAGE COEFFICIENT.
(iii) PEAK FLOW DOES NOT INCLUDE BASEFLOW IF ANY.

```
--------------------
| ADD HYD  ( 24000)|
|   1 +  2 =  3    |          AREA    QPEAK    TPEAK     R.V.
--------------------          (ha)    (cms)    (hrs)     (mm)
        ID1= 1 (  2400):     2.47   0.233     7.00   137.83
      + ID2= 2 ( 24001):    81.05   5.290     7.67   137.81
        ================================================
        ID = 3 ( 24000):    83.52   5.415     7.67   137.81

     NOTE:  PEAK FLOWS DO NOT INCLUDE BASEFLOWS IF ANY.
--------------------------------------------------------------------------------
--------------------
| ROUTE CHN( 24002)|
| IN= 2---> OUT= 1 |     Routing time step (min)'=  5.00
--------------------
               <------ DATA FOR SECTION (   1.1) ------>
               Distance      Elevation       Manning
                   0.00        256.91        0.0800
                  30.30        256.72    0.0800 /0.0350  Main Channel
                  35.77        256.32        0.0350      Main Channel
                  37.26        256.30        0.0350      Main Channel
                  40.74        256.75    0.0350 /0.0800  Main Channel
                  71.50        257.50        0.0800

      <---------------------- TRAVEL TIME TABLE ---------------------->
       DEPTH     ELEV       VOLUME    FLOW RATE    VELOCITY   TRAV.TIME
         (m)      (m)     (cu.m.)      (cms)        (m/s)      (min)
       0.03   256.33    .248E+01       0.0          0.30       4.00
       0.06   256.36    .726E+01       0.1          0.51       2.39
       0.09   256.39    .135E+02       0.1          0.66       1.84
       0.12   256.42    .211E+02       0.2          0.79       1.55
       0.15   256.45    .301E+02       0.4          0.90       1.36
       0.18   256.48    .405E+02       0.6          1.00       1.22
       0.21   256.51    .523E+02       0.8          1.10       1.11
       0.24   256.54    .655E+02       1.1          1.19       1.03
       0.27   256.57    .802E+02       1.4          1.27       0.96
       0.30   256.60    .962E+02       1.8          1.36       0.90
       0.33   256.63    .114E+03       2.2          1.44       0.85
       0.36   256.66    .133E+03       2.7          1.51       0.81
       0.39   256.69    .153E+03       3.3          1.59       0.77
       0.42   256.72    .175E+03       4.0          1.66       0.73
       0.46   256.76    .212E+03       5.1          1.74       0.70
       0.50   256.80    .269E+03       6.4          1.74       0.70
       0.53   256.83    .348E+03       8.0          1.68       0.73
       0.57   256.87    .448E+03       9.9          1.61       0.76
       0.61   256.91    .568E+03      12.0          1.55       0.79

                                    <---- hydrograph ---->   <-pipe / channel->
                              AREA    QPEAK   TPEAK   R.V.   MAX DEPTH  MAX VEL
                              (ha)    (cms)   (hrs)   (mm)      (m)      (m/s)
   INFLOW : ID= 2 ( 24000)   83.52     5.41    7.67 137.81      0.47      1.74
   OUTFLOW: ID= 1 ( 24002)   83.52     5.41    7.67 137.81      0.47      1.74



--------------------------------------------------------------------------------
--------------------
| CALIB            |
| NASHYD   (  2101)|   Area    (ha)=   0.04   Curve Number   (CN)= 67.0
|ID= 1 DT= 5.0 min |   Ia      (mm)=   5.00   # of Linear Res.(N)= 3.00
--------------------   U.H. Tp(hrs)=   0.12

        NOTE:  RAINFALL WAS TRANSFORMED TO   5.0 MIN. TIME STEP.
```

---- TRANSFORMED HYETOGRAPH ----

TIME hrs	RAIN mm/hr	TIME hrs	RAIN mm/hr	TIME hrs	RAIN mm/hr	TIME hrs	RAIN mm/hr
0.083	15.00	3.333	3.00	6.583	43.00	9.83	13.00
0.167	15.00	3.417	3.00	6.667	43.00	9.92	13.00
0.250	15.00	3.500	3.00	6.750	43.00	10.00	13.00
0.333	15.00	3.583	3.00	6.833	43.00	10.08	13.00
0.417	15.00	3.667	3.00	6.917	43.00	10.17	13.00
0.500	15.00	3.750	3.00	7.000	43.00	10.25	13.00
0.583	15.00	3.833	3.00	7.083	20.00	10.33	13.00
0.667	15.00	3.917	3.00	7.167	20.00	10.42	13.00
0.750	15.00	4.000	3.00	7.250	20.00	10.50	13.00
0.833	15.00	4.083	5.00	7.333	20.00	10.58	13.00
0.917	15.00	4.167	5.00	7.417	20.00	10.67	13.00
1.000	15.00	4.250	5.00	7.500	20.00	10.75	13.00
1.083	20.00	4.333	5.00	7.583	20.00	10.83	13.00
1.167	20.00	4.417	5.00	7.667	20.00	10.92	13.00
1.250	20.00	4.500	5.00	7.750	20.00	11.00	13.00
1.333	20.00	4.583	5.00	7.833	20.00	11.08	8.00
1.417	20.00	4.667	5.00	7.917	20.00	11.17	8.00
1.500	20.00	4.750	5.00	8.000	20.00	11.25	8.00
1.583	20.00	4.833	5.00	8.083	23.00	11.33	8.00
1.667	20.00	4.917	5.00	8.167	23.00	11.42	8.00
1.750	20.00	5.000	5.00	8.250	23.00	11.50	8.00
1.833	20.00	5.083	20.00	8.333	23.00	11.58	8.00
1.917	20.00	5.167	20.00	8.417	23.00	11.67	8.00
2.000	20.00	5.250	20.00	8.500	23.00	11.75	8.00
2.083	10.00	5.333	20.00	8.583	23.00	11.83	8.00
2.167	10.00	5.417	20.00	8.667	23.00	11.92	8.00
2.250	10.00	5.500	20.00	8.750	23.00	12.00	8.00
2.333	10.00	5.583	20.00	8.833	23.00	12.08	0.00
2.417	10.00	5.667	20.00	8.917	23.00	12.17	0.00
2.500	10.00	5.750	20.00	9.000	23.00	12.25	0.00
2.583	10.00	5.833	20.00	9.083	13.00	12.33	0.00
2.667	10.00	5.917	20.00	9.167	13.00	12.42	0.00
2.750	10.00	6.000	20.00	9.250	13.00	12.50	0.00
2.833	10.00	6.083	43.00	9.333	13.00	12.58	0.00
2.917	10.00	6.167	43.00	9.417	13.00	12.67	0.00
3.000	10.00	6.250	43.00	9.500	13.00	12.75	0.00
3.083	3.00	6.333	43.00	9.583	13.00	12.83	0.00
3.167	3.00	6.417	43.00	9.667	13.00	12.92	0.00
3.250	3.00	6.500	43.00	9.750	13.00	13.00	0.00

Unit Hyd Qpeak (cms)= 0.013

PEAK FLOW (cms)= 0.003 (i)
TIME TO PEAK (hrs)= 7.000
RUNOFF VOLUME (mm)= 111.364
TOTAL RAINFALL (mm)= 193.000
RUNOFF COEFFICIENT = 0.577

(i) PEAK FLOW DOES NOT INCLUDE BASEFLOW IF ANY.

ADD HYD (0019)		AREA	QPEAK	TPEAK	R.V.
1 + 2 = 3		(ha)	(cms)	(hrs)	(mm)
	ID1= 1 (2101):	0.04	0.003	7.00	111.36
	+ ID2= 2 (24002):	83.52	5.415	7.67	137.81
		==========	==========	==========	==========

```
        ID = 3 (  0019):    83.56   5.416     7.67   137.80

     NOTE:  PEAK FLOWS DO NOT INCLUDE BASEFLOWS IF ANY.
--------------------------------------------------------------------------------

--------------------
| ADD HYD  (  0014)|
|   1 +  2 =  3    |          AREA    QPEAK    TPEAK     R.V.
--------------------          (ha)    (cms)    (hrs)     (mm)
        ID1= 1 (  0019):    83.56   5.416     7.67   137.80
      + ID2= 2 ( 22000):    14.78   1.417     7.00   144.88
        ================================================
        ID = 3 (  0014):    98.34   6.327     7.08   138.87

     NOTE:  PEAK FLOWS DO NOT INCLUDE BASEFLOWS IF ANY.
--------------------------------------------------------------------------------
--------------------
| ROUTE CHN( 21001)|
| IN= 2---> OUT= 1 |     Routing time step (min)'=  5.00
--------------------
               <------ DATA FOR SECTION (   1.1) ------>
               Distance      Elevation       Manning
                   0.00          0.15         0.0110
                   0.01          0.00    0.0110 /0.0110  Main Channel
                   4.26          0.02         0.0110      Main Channel
                   8.51          0.00    0.0110 /0.0110  Main Channel
                   8.52          0.15         0.0110

      <---------------------- TRAVEL TIME TABLE ---------------------->
       DEPTH     ELEV      VOLUME    FLOW RATE    VELOCITY   TRAV.TIME
         (m)      (m)     (cu.m.)      (cms)        (m/s)      (min)
       0.01     0.01    .325E+00       0.0          0.16       2.71
       0.02     0.02    .130E+01       0.0          0.25       1.71
       0.02     0.02    .290E+01       0.0          0.36       1.22
       0.03     0.03    .465E+01       0.1          0.49       0.89
       0.04     0.04    .640E+01       0.1          0.60       0.72
       0.05     0.05    .815E+01       0.2          0.71       0.61
       0.06     0.06    .991E+01       0.3          0.81       0.54
       0.06     0.06    .117E+02       0.4          0.90       0.48
       0.07     0.07    .134E+02       0.5          0.99       0.44
       0.08     0.08    .152E+02       0.6          1.07       0.41
       0.09     0.09    .169E+02       0.7          1.15       0.38
       0.09     0.09    .187E+02       0.9          1.23       0.35
       0.10     0.10    .204E+02       1.0          1.31       0.33
       0.11     0.11    .222E+02       1.2          1.38       0.31
       0.12     0.12    .239E+02       1.3          1.45       0.30
       0.13     0.13    .257E+02       1.5          1.52       0.29
       0.13     0.13    .274E+02       1.7          1.59       0.27
       0.14     0.14    .292E+02       1.9          1.66       0.26
       0.15     0.15    .310E+02       2.0          1.73       0.25

     **** WARNING:  TRAVEL TIME TABLE EXCEEDED
                                    <---- hydrograph ---->   <-pipe / channel->
                                AREA    QPEAK   TPEAK   R.V.   MAX DEPTH  MAX VEL
                                (ha)    (cms)   (hrs)   (mm)      (m)       (m/s)
    INFLOW : ID= 2 (  0014)   98.34     6.33    7.08 138.87      0.15       1.72
    OUTFLOW: ID= 1 ( 21001)   98.34     6.33    7.08 138.86      0.15       1.72



--------------------------------------------------------------------------------
--------------------
| CALIB            |
| STANDHYD (  2100)|   Area    (ha)=   0.05
```

|ID= 1 DT= 5.0 min | Total Imp(%)= 89.00 Dir. Conn.(%)= 89.00

		IMPERVIOUS	PERVIOUS (i)
Surface Area	(ha)=	0.04	0.01
Dep. Storage	(mm)=	1.00	1.50
Average Slope	(%)=	1.00	2.00
Length	(m)=	18.26	40.00
Mannings n	=	0.013	0.250

NOTE: RAINFALL WAS TRANSFORMED TO 5.0 MIN. TIME STEP.

---- TRANSFORMED HYETOGRAPH ----

TIME hrs	RAIN mm/hr	TIME hrs	RAIN mm/hr	TIME hrs	RAIN mm/hr	TIME hrs	RAIN mm/hr
0.083	15.00	3.333	3.00	6.583	43.00	9.83	13.00
0.167	15.00	3.417	3.00	6.667	43.00	9.92	13.00
0.250	15.00	3.500	3.00	6.750	43.00	10.00	13.00
0.333	15.00	3.583	3.00	6.833	43.00	10.08	13.00
0.417	15.00	3.667	3.00	6.917	43.00	10.17	13.00
0.500	15.00	3.750	3.00	7.000	43.00	10.25	13.00
0.583	15.00	3.833	3.00	7.083	20.00	10.33	13.00
0.667	15.00	3.917	3.00	7.167	20.00	10.42	13.00
0.750	15.00	4.000	3.00	7.250	20.00	10.50	13.00
0.833	15.00	4.083	5.00	7.333	20.00	10.58	13.00
0.917	15.00	4.167	5.00	7.417	20.00	10.67	13.00
1.000	15.00	4.250	5.00	7.500	20.00	10.75	13.00
1.083	20.00	4.333	5.00	7.583	20.00	10.83	13.00
1.167	20.00	4.417	5.00	7.667	20.00	10.92	13.00
1.250	20.00	4.500	5.00	7.750	20.00	11.00	13.00
1.333	20.00	4.583	5.00	7.833	20.00	11.08	8.00
1.417	20.00	4.667	5.00	7.917	20.00	11.17	8.00
1.500	20.00	4.750	5.00	8.000	20.00	11.25	8.00
1.583	20.00	4.833	5.00	8.083	23.00	11.33	8.00
1.667	20.00	4.917	5.00	8.167	23.00	11.42	8.00
1.750	20.00	5.000	5.00	8.250	23.00	11.50	8.00
1.833	20.00	5.083	20.00	8.333	23.00	11.58	8.00
1.917	20.00	5.167	20.00	8.417	23.00	11.67	8.00
2.000	20.00	5.250	20.00	8.500	23.00	11.75	8.00
2.083	10.00	5.333	20.00	8.583	23.00	11.83	8.00
2.167	10.00	5.417	20.00	8.667	23.00	11.92	8.00
2.250	10.00	5.500	20.00	8.750	23.00	12.00	8.00
2.333	10.00	5.583	20.00	8.833	23.00	12.08	0.00
2.417	10.00	5.667	20.00	8.917	23.00	12.17	0.00
2.500	10.00	5.750	20.00	9.000	23.00	12.25	0.00
2.583	10.00	5.833	20.00	9.083	13.00	12.33	0.00
2.667	10.00	5.917	20.00	9.167	13.00	12.42	0.00
2.750	10.00	6.000	20.00	9.250	13.00	12.50	0.00
2.833	10.00	6.083	43.00	9.333	13.00	12.58	0.00
2.917	10.00	6.167	43.00	9.417	13.00	12.67	0.00
3.000	10.00	6.250	43.00	9.500	13.00	12.75	0.00
3.083	3.00	6.333	43.00	9.583	13.00	12.83	0.00
3.167	3.00	6.417	43.00	9.667	13.00	12.92	0.00
3.250	3.00	6.500	43.00	9.750	13.00	13.00	0.00

Max.Eff.Inten.	(mm/hr)=	43.00	42.98	
	over (min)	5.00	10.00	
Storage Coeff.	(min)=	1.29 (ii)	5.58 (ii)	
Unit Hyd. Tpeak	(min)=	5.00	10.00	
Unit Hyd. peak	(cms)=	0.33	0.16	
				TOTALS
PEAK FLOW	(cms)=	0.01	0.00	0.006 (iii)
TIME TO PEAK	(hrs)=	6.33	7.00	6.92
RUNOFF VOLUME	(mm)=	192.00	188.97	191.63

```
     TOTAL RAINFALL   (mm)=     193.00       193.00         193.00
     RUNOFF COEFFICIENT   =       0.99         0.98           0.99

***** WARNING: STORAGE COEFF. IS SMALLER THAN TIME STEP!

       (i) CN PROCEDURE SELECTED FOR PERVIOUS LOSSES:
            CN*  =  99.0    Ia = Dep. Storage  (Above)
      (ii) TIME STEP (DT) SHOULD BE SMALLER OR EQUAL
           THAN THE STORAGE COEFFICIENT.
     (iii) PEAK FLOW DOES NOT INCLUDE BASEFLOW IF ANY.

--------------------------------------------------------------------------------

--------------------
| ADD HYD  ( 21000)|
|   1 +  2 =  3    |          AREA    QPEAK    TPEAK     R.V.
--------------------          (ha)    (cms)    (hrs)     (mm)
        ID1= 1 (  2100):      0.05   0.006     6.92   191.63
      + ID2= 2 ( 21001):     98.34   6.326     7.08   138.86
        ===================================================
        ID = 3 ( 21000):     98.39   6.329     7.08   138.89

     NOTE:  PEAK FLOWS DO NOT INCLUDE BASEFLOWS IF ANY.
--------------------------------------------------------------------------------
--------------------
| CALIB            |
| NASHYD   (  2001)|   Area    (ha)=   0.04   Curve Number   (CN)= 69.0
|ID= 1 DT= 5.0 min |   Ia      (mm)=   5.00   # of Linear Res.(N)= 3.00
--------------------   U.H. Tp(hrs)=   0.19

         NOTE:  RAINFALL WAS TRANSFORMED TO   5.0 MIN. TIME STEP.


                              ---- TRANSFORMED HYETOGRAPH ----
                 TIME    RAIN |  TIME    RAIN |'  TIME    RAIN |  TIME    RAIN
                  hrs   mm/hr |   hrs   mm/hr |'   hrs   mm/hr |   hrs   mm/hr
                0.083   15.00 | 3.333    3.00 | 6.583   43.00 |  9.83   13.00
                0.167   15.00 | 3.417    3.00 | 6.667   43.00 |  9.92   13.00
                0.250   15.00 | 3.500    3.00 | 6.750   43.00 | 10.00   13.00
                0.333   15.00 | 3.583    3.00 | 6.833   43.00 | 10.08   13.00
                0.417   15.00 | 3.667    3.00 | 6.917   43.00 | 10.17   13.00
                0.500   15.00 | 3.750    3.00 | 7.000   43.00 | 10.25   13.00
                0.583   15.00 | 3.833    3.00 | 7.083   20.00 | 10.33   13.00
                0.667   15.00 | 3.917    3.00 | 7.167   20.00 | 10.42   13.00
                0.750   15.00 | 4.000    3.00 | 7.250   20.00 | 10.50   13.00
                0.833   15.00 | 4.083    5.00 | 7.333   20.00 | 10.58   13.00
                0.917   15.00 | 4.167    5.00 | 7.417   20.00 | 10.67   13.00
                1.000   15.00 | 4.250    5.00 | 7.500   20.00 | 10.75   13.00
                1.083   20.00 | 4.333    5.00 | 7.583   20.00 | 10.83   13.00
                1.167   20.00 | 4.417    5.00 | 7.667   20.00 | 10.92   13.00
                1.250   20.00 | 4.500    5.00 | 7.750   20.00 | 11.00   13.00
                1.333   20.00 | 4.583    5.00 | 7.833   20.00 | 11.08    8.00
                1.417   20.00 | 4.667    5.00 | 7.917   20.00 | 11.17    8.00
                1.500   20.00 | 4.750    5.00 | 8.000   20.00 | 11.25    8.00
                1.583   20.00 | 4.833    5.00 | 8.083   23.00 | 11.33    8.00
                1.667   20.00 | 4.917    5.00 | 8.167   23.00 | 11.42    8.00
                1.750   20.00 | 5.000    5.00 | 8.250   23.00 | 11.50    8.00
                1.833   20.00 | 5.083   20.00 | 8.333   23.00 | 11.58    8.00
                1.917   20.00 | 5.167   20.00 | 8.417   23.00 | 11.67    8.00
                2.000   20.00 | 5.250   20.00 | 8.500   23.00 | 11.75    8.00
                2.083   10.00 | 5.333   20.00 | 8.583   23.00 | 11.83    8.00
                2.167   10.00 | 5.417   20.00 | 8.667   23.00 | 11.92    8.00
                2.250   10.00 | 5.500   20.00 | 8.750   23.00 | 12.00    8.00
                2.333   10.00 | 5.583   20.00 | 8.833   23.00 | 12.08    0.00
```

2.417	10.00	5.667	20.00	8.917	23.00	12.17	0.00
2.500	10.00	5.750	20.00	9.000	23.00	12.25	0.00
2.583	10.00	5.833	20.00	9.083	13.00	12.33	0.00
2.667	10.00	5.917	20.00	9.167	13.00	12.42	0.00
2.750	10.00	6.000	20.00	9.250	13.00	12.50	0.00
2.833	10.00	6.083	43.00	9.333	13.00	12.58	0.00
2.917	10.00	6.167	43.00	9.417	13.00	12.67	0.00
3.000	10.00	6.250	43.00	9.500	13.00	12.75	0.00
3.083	3.00	6.333	43.00	9.583	13.00	12.83	0.00
3.167	3.00	6.417	43.00	9.667	13.00	12.92	0.00
3.250	3.00	6.500	43.00	9.750	13.00	13.00	0.00

Unit Hyd Qpeak (cms)= 0.008

PEAK FLOW (cms)= 0.003 (i)
TIME TO PEAK (hrs)= 7.000
RUNOFF VOLUME (mm)= 116.690
TOTAL RAINFALL (mm)= 193.000
RUNOFF COEFFICIENT = 0.605

(i) PEAK FLOW DOES NOT INCLUDE BASEFLOW IF ANY.

ADD HYD (0013)		AREA	QPEAK	TPEAK	R.V.
		(ha)	(cms)	(hrs)	(mm)
1 + 2 = 3	ID1= 1 (2001):	0.04	0.003	7.00	116.69
	+ ID2= 2 (21000):	98.39	6.329	7.08	138.89
	ID = 3 (0013):	98.43	6.332	7.08	138.88

NOTE: PEAK FLOWS DO NOT INCLUDE BASEFLOWS IF ANY.

ROUTE CHN(20001)	
IN= 2---> OUT= 1	Routing time step (min)'= 5.00

<------ DATA FOR SECTION (1.1) ------>

Distance	Elevation	Manning	
0.00	0.15	0.0110	
0.01	0.00	0.0110 /0.0110	Main Channel
4.26	0.02	0.0110	Main Channel
8.51	0.00	0.0110 /0.0110	Main Channel
8.52	0.15	0.0110	

<---------- TRAVEL TIME TABLE ---------->

DEPTH (m)	ELEV (m)	VOLUME (cu.m.)	FLOW RATE (cms)	VELOCITY (m/s)	TRAV.TIME (min)
0.01	0.01	.254E+00	0.0	0.16	2.12
0.02	0.02	.102E+01	0.0	0.25	1.33
0.02	0.02	.226E+01	0.0	0.36	0.95
0.03	0.03	.363E+01	0.1	0.49	0.70
0.04	0.04	.500E+01	0.1	0.60	0.56
0.05	0.05	.637E+01	0.2	0.71	0.48
0.06	0.06	.774E+01	0.3	0.81	0.42
0.06	0.06	.911E+01	0.4	0.90	0.38
0.07	0.07	.105E+02	0.5	0.99	0.34
0.08	0.08	.119E+02	0.6	1.07	0.32
0.09	0.09	.132E+02	0.7	1.15	0.29
0.09	0.09	.146E+02	0.9	1.23	0.28
0.10	0.10	.160E+02	1.0	1.31	0.26
0.11	0.11	.173E+02	1.2	1.38	0.25

0.12	0.12	.187E+02	1.3	1.45	0.23
0.13	0.13	.201E+02	1.5	1.52	0.22
0.13	0.13	.215E+02	1.7	1.59	0.21
0.14	0.14	.228E+02	1.9	1.66	0.20
0.15	0.15	.242E+02	2.0	1.73	0.20

**** WARNING: TRAVEL TIME TABLE EXCEEDED

	<---- hydrograph ---->				<-pipe / channel->	
	AREA (ha)	QPEAK (cms)	TPEAK (hrs)	R.V. (mm)	MAX DEPTH (m)	MAX VEL (m/s)
INFLOW : ID= 2 (0013)	98.43	6.33	7.08	138.88	0.15	1.72
OUTFLOW: ID= 1 (20001)	98.43	6.33	7.08	138.88	0.15	1.73

CALIB	
STANDHYD (2000)	Area (ha)= 0.04
ID= 1 DT= 5.0 min	Total Imp(%)= 90.00 Dir. Conn.(%)= 89.00

		IMPERVIOUS	PERVIOUS (i)
Surface Area	(ha)=	0.04	0.00
Dep. Storage	(mm)=	1.00	1.50
Average Slope	(%)=	1.00	2.00
Length	(m)=	16.33	40.00
Mannings n	=	0.013	0.250

NOTE: RAINFALL WAS TRANSFORMED TO 5.0 MIN. TIME STEP.

---- TRANSFORMED HYETOGRAPH ----

TIME hrs	RAIN mm/hr	TIME hrs	RAIN mm/hr	TIME hrs	RAIN mm/hr	TIME hrs	RAIN mm/hr
0.083	15.00	3.333	3.00	6.583	43.00	9.83	13.00
0.167	15.00	3.417	3.00	6.667	43.00	9.92	13.00
0.250	15.00	3.500	3.00	6.750	43.00	10.00	13.00
0.333	15.00	3.583	3.00	6.833	43.00	10.08	13.00
0.417	15.00	3.667	3.00	6.917	43.00	10.17	13.00
0.500	15.00	3.750	3.00	7.000	43.00	10.25	13.00
0.583	15.00	3.833	3.00	7.083	20.00	10.33	13.00
0.667	15.00	3.917	3.00	7.167	20.00	10.42	13.00
0.750	15.00	4.000	3.00	7.250	20.00	10.50	13.00
0.833	15.00	4.083	5.00	7.333	20.00	10.58	13.00
0.917	15.00	4.167	5.00	7.417	20.00	10.67	13.00
1.000	15.00	4.250	5.00	7.500	20.00	10.75	13.00
1.083	20.00	4.333	5.00	7.583	20.00	10.83	13.00
1.167	20.00	4.417	5.00	7.667	20.00	10.92	13.00
1.250	20.00	4.500	5.00	7.750	20.00	11.00	13.00
1.333	20.00	4.583	5.00	7.833	20.00	11.08	8.00
1.417	20.00	4.667	5.00	7.917	20.00	11.17	8.00
1.500	20.00	4.750	5.00	8.000	20.00	11.25	8.00
1.583	20.00	4.833	5.00	8.083	23.00	11.33	8.00
1.667	20.00	4.917	5.00	8.167	23.00	11.42	8.00
1.750	20.00	5.000	5.00	8.250	23.00	11.50	8.00
1.833	20.00	5.083	20.00	8.333	23.00	11.58	8.00
1.917	20.00	5.167	20.00	8.417	23.00	11.67	8.00
2.000	20.00	5.250	20.00	8.500	23.00	11.75	8.00
2.083	10.00	5.333	20.00	8.583	23.00	11.83	8.00
2.167	10.00	5.417	20.00	8.667	23.00	11.92	8.00
2.250	10.00	5.500	20.00	8.750	23.00	12.00	8.00
2.333	10.00	5.583	20.00	8.833	23.00	12.08	0.00
2.417	10.00	5.667	20.00	8.917	23.00	12.17	0.00
2.500	10.00	5.750	20.00	9.000	23.00	12.25	0.00

2.583	10.00	5.833	20.00	9.083	13.00	12.33	0.00
2.667	10.00	5.917	20.00	9.167	13.00	12.42	0.00
2.750	10.00	6.000	20.00	9.250	13.00	12.50	0.00
2.833	10.00	6.083	43.00	9.333	13.00	12.58	0.00
2.917	10.00	6.167	43.00	9.417	13.00	12.67	0.00
3.000	10.00	6.250	43.00	9.500	13.00	12.75	0.00
3.083	3.00	6.333	43.00	9.583	13.00	12.83	0.00
3.167	3.00	6.417	43.00	9.667	13.00	12.92	0.00
3.250	3.00	6.500	43.00	9.750	13.00	13.00	0.00

Max.Eff.Inten.(mm/hr)=	43.00	47.28	
over (min)	5.00	10.00	
Storage Coeff. (min)=	1.21 (ii)	5.33 (ii)	
Unit Hyd. Tpeak (min)=	5.00	10.00	
Unit Hyd. peak (cms)=	0.33	0.16	
			TOTALS
PEAK FLOW (cms)=	0.00	0.00	0.005 (iii)
TIME TO PEAK (hrs)=	6.33	7.00	6.92
RUNOFF VOLUME (mm)=	192.00	189.33	191.60
TOTAL RAINFALL (mm)=	193.00	193.00	193.00
RUNOFF COEFFICIENT =	0.99	0.98	0.99

***** WARNING: STORAGE COEFF. IS SMALLER THAN TIME STEP!

(i) CN PROCEDURE SELECTED FOR PERVIOUS LOSSES:
CN* = 99.0 Ia = Dep. Storage (Above)
(ii) TIME STEP (DT) SHOULD BE SMALLER OR EQUAL
THAN THE STORAGE COEFFICIENT.
(iii) PEAK FLOW DOES NOT INCLUDE BASEFLOW IF ANY.

ADD HYD (20000)		AREA	QPEAK	TPEAK	R.V.
		(ha)	(cms)	(hrs)	(mm)
	ID1= 1 (2000):	0.04	0.005	6.92	191.60
1 + 2 = 3	+ ID2= 2 (20001):	98.43	6.332	7.08	138.88
	ID = 3 (20000):	98.47	6.334	7.08	138.90

NOTE: PEAK FLOWS DO NOT INCLUDE BASEFLOWS IF ANY.

CALIB STANDHYD (1902)	Area (ha)= 3.51
ID= 1 DT= 5.0 min	Total Imp(%)= 55.00 Dir. Conn.(%)= 34.00

		IMPERVIOUS	PERVIOUS (i)
Surface Area	(ha)=	1.93	1.58
Dep. Storage	(mm)=	1.00	1.50
Average Slope	(%)=	1.00	2.00
Length	(m)=	152.97	40.00
Mannings n	=	0.013	0.250

NOTE: RAINFALL WAS TRANSFORMED TO 5.0 MIN. TIME STEP.

---- TRANSFORMED HYETOGRAPH ----

TIME hrs	RAIN mm/hr	TIME hrs	RAIN mm/hr	TIME hrs	RAIN mm/hr	TIME hrs	RAIN mm/hr
0.083	15.00	3.333	3.00	6.583	43.00	9.83	13.00
0.167	15.00	3.417	3.00	6.667	43.00	9.92	13.00
0.250	15.00	3.500	3.00	6.750	43.00	10.00	13.00

0.333	15.00	3.583	3.00	6.833	43.00	10.08	13.00
0.417	15.00	3.667	3.00	6.917	43.00	10.17	13.00
0.500	15.00	3.750	3.00	7.000	43.00	10.25	13.00
0.583	15.00	3.833	3.00	7.083	20.00	10.33	13.00
0.667	15.00	3.917	3.00	7.167	20.00	10.42	13.00
0.750	15.00	4.000	3.00	7.250	20.00	10.50	13.00
0.833	15.00	4.083	5.00	7.333	20.00	10.58	13.00
0.917	15.00	4.167	5.00	7.417	20.00	10.67	13.00
1.000	15.00	4.250	5.00	7.500	20.00	10.75	13.00
1.083	20.00	4.333	5.00	7.583	20.00	10.83	13.00
1.167	20.00	4.417	5.00	7.667	20.00	10.92	13.00
1.250	20.00	4.500	5.00	7.750	20.00	11.00	13.00
1.333	20.00	4.583	5.00	7.833	20.00	11.08	8.00
1.417	20.00	4.667	5.00	7.917	20.00	11.17	8.00
1.500	20.00	4.750	5.00	8.000	20.00	11.25	8.00
1.583	20.00	4.833	5.00	8.083	23.00	11.33	8.00
1.667	20.00	4.917	5.00	8.167	23.00	11.42	8.00
1.750	20.00	5.000	5.00	8.250	23.00	11.50	8.00
1.833	20.00	5.083	20.00	8.333	23.00	11.58	8.00
1.917	20.00	5.167	20.00	8.417	23.00	11.67	8.00
2.000	20.00	5.250	20.00	8.500	23.00	11.75	8.00
2.083	10.00	5.333	20.00	8.583	23.00	11.83	8.00
2.167	10.00	5.417	20.00	8.667	23.00	11.92	8.00
2.250	10.00	5.500	20.00	8.750	23.00	12.00	8.00
2.333	10.00	5.583	20.00	8.833	23.00	12.08	0.00
2.417	10.00	5.667	20.00	8.917	23.00	12.17	0.00
2.500	10.00	5.750	20.00	9.000	23.00	12.25	0.00
2.583	10.00	5.833	20.00	9.083	13.00	12.33	0.00
2.667	10.00	5.917	20.00	9.167	13.00	12.42	0.00
2.750	10.00	6.000	20.00	9.250	13.00	12.50	0.00
2.833	10.00	6.083	43.00	9.333	13.00	12.58	0.00
2.917	10.00	6.167	43.00	9.417	13.00	12.67	0.00
3.000	10.00	6.250	43.00	9.500	13.00	12.75	0.00
3.083	3.00	6.333	43.00	9.583	13.00	12.83	0.00
3.167	3.00	6.417	43.00	9.667	13.00	12.92	0.00
3.250	3.00	6.500	43.00	9.750	13.00	13.00	0.00

Max.Eff.Inten.(mm/hr)=	43.00	55.71	
over (min)	5.00	15.00	
Storage Coeff. (min)=	4.62 (ii)	13.54 (ii)	
Unit Hyd. Tpeak (min)=	5.00	15.00	
Unit Hyd. peak (cms)=	0.22	0.08	
			TOTALS
PEAK FLOW (cms)=	0.14	0.24	0.380 (iii)
TIME TO PEAK (hrs)=	6.92	7.00	7.00
RUNOFF VOLUME (mm)=	192.00	147.59	162.69
TOTAL RAINFALL (mm)=	193.00	193.00	193.00
RUNOFF COEFFICIENT =	0.99	0.76	0.84

***** WARNING: STORAGE COEFF. IS SMALLER THAN TIME STEP!

(i) CN PROCEDURE SELECTED FOR PERVIOUS LOSSES:
CN* = 75.0 Ia = Dep. Storage (Above)
(ii) TIME STEP (DT) SHOULD BE SMALLER OR EQUAL
THAN THE STORAGE COEFFICIENT.
(iii) PEAK FLOW DOES NOT INCLUDE BASEFLOW IF ANY.

ADD HYD (0012)				
1 + 2 = 3	AREA (ha)	QPEAK (cms)	TPEAK (hrs)	R.V. (mm)
ID1= 1 (1902):	3.51	0.380	7.00	162.69

```
      + ID2= 2 ( 20000):    98.47   6.334     7.08   138.90
        ====================================================
        ID = 3 (  0012):   101.98   6.656     7.08   139.72

     NOTE:  PEAK FLOWS DO NOT INCLUDE BASEFLOWS IF ANY.
--------------------------------------------------------------------------------
--------------------
| CALIB             |
| NASHYD   (  1901)|   Area    (ha)=   0.07   Curve Number   (CN)= 71.0
|ID= 1 DT= 5.0 min |   Ia      (mm)=   5.00   # of Linear Res.(N)= 3.00
--------------------   U.H. Tp(hrs)=   0.17

         NOTE:  RAINFALL WAS TRANSFORMED TO   5.0 MIN. TIME STEP.
```

---- TRANSFORMED HYETOGRAPH ----

TIME hrs	RAIN mm/hr	TIME hrs	RAIN mm/hr	TIME hrs	RAIN mm/hr	TIME hrs	RAIN mm/hr
0.083	15.00	3.333	3.00	6.583	43.00	9.83	13.00
0.167	15.00	3.417	3.00	6.667	43.00	9.92	13.00
0.250	15.00	3.500	3.00	6.750	43.00	10.00	13.00
0.333	15.00	3.583	3.00	6.833	43.00	10.08	13.00
0.417	15.00	3.667	3.00	6.917	43.00	10.17	13.00
0.500	15.00	3.750	3.00	7.000	43.00	10.25	13.00
0.583	15.00	3.833	3.00	7.083	20.00	10.33	13.00
0.667	15.00	3.917	3.00	7.167	20.00	10.42	13.00
0.750	15.00	4.000	3.00	7.250	20.00	10.50	13.00
0.833	15.00	4.083	5.00	7.333	20.00	10.58	13.00
0.917	15.00	4.167	5.00	7.417	20.00	10.67	13.00
1.000	15.00	4.250	5.00	7.500	20.00	10.75	13.00
1.083	20.00	4.333	5.00	7.583	20.00	10.83	13.00
1.167	20.00	4.417	5.00	7.667	20.00	10.92	13.00
1.250	20.00	4.500	5.00	7.750	20.00	11.00	13.00
1.333	20.00	4.583	5.00	7.833	20.00	11.08	8.00
1.417	20.00	4.667	5.00	7.917	20.00	11.17	8.00
1.500	20.00	4.750	5.00	8.000	20.00	11.25	8.00
1.583	20.00	4.833	5.00	8.083	23.00	11.33	8.00
1.667	20.00	4.917	5.00	8.167	23.00	11.42	8.00
1.750	20.00	5.000	5.00	8.250	23.00	11.50	8.00
1.833	20.00	5.083	20.00	8.333	23.00	11.58	8.00
1.917	20.00	5.167	20.00	8.417	23.00	11.67	8.00
2.000	20.00	5.250	20.00	8.500	23.00	11.75	8.00
2.083	10.00	5.333	20.00	8.583	23.00	11.83	8.00
2.167	10.00	5.417	20.00	8.667	23.00	11.92	8.00
2.250	10.00	5.500	20.00	8.750	23.00	12.00	8.00
2.333	10.00	5.583	20.00	8.833	23.00	12.08	0.00
2.417	10.00	5.667	20.00	8.917	23.00	12.17	0.00
2.500	10.00	5.750	20.00	9.000	23.00	12.25	0.00
2.583	10.00	5.833	20.00	9.083	13.00	12.33	0.00
2.667	10.00	5.917	20.00	9.167	13.00	12.42	0.00
2.750	10.00	6.000	20.00	9.250	13.00	12.50	0.00
2.833	10.00	6.083	43.00	9.333	13.00	12.58	0.00
2.917	10.00	6.167	43.00	9.417	13.00	12.67	0.00
3.000	10.00	6.250	43.00	9.500	13.00	12.75	0.00
3.083	3.00	6.333	43.00	9.583	13.00	12.83	0.00
3.167	3.00	6.417	43.00	9.667	13.00	12.92	0.00
3.250	3.00	6.500	43.00	9.750	13.00	13.00	0.00

```
     Unit Hyd Qpeak  (cms)=   0.016

     PEAK FLOW       (cms)=   0.006 (i)
     TIME TO PEAK    (hrs)=   7.000
     RUNOFF VOLUME    (mm)= 120.705
     TOTAL RAINFALL   (mm)= 193.000
```

RUNOFF COEFFICIENT = 0.625

(i) PEAK FLOW DOES NOT INCLUDE BASEFLOW IF ANY.

ADD HYD (0011)|	AREA (ha)	QPEAK (cms)	TPEAK (hrs)	R.V. (mm)
1 + 2 = 3					
ID1= 1 (0012):	101.98	6.656	7.08	139.72
+ ID2= 2 (1901):	0.07	0.006	7.00	120.70
ID = 3 (0011):	102.05	6.661	7.08	139.71

NOTE: PEAK FLOWS DO NOT INCLUDE BASEFLOWS IF ANY.

ROUTE CHN(19001)	
IN= 2---> OUT= 1	Routing time step (min)'= 5.00

<------ DATA FOR SECTION (1.1) ------>

Distance	Elevation	Manning	
0.00	0.15	0.0110	
0.01	0.00	0.0110 /0.0110	Main Channel
4.26	0.02	0.0110	Main Channel
8.51	0.00	0.0110 /0.0110	Main Channel
8.52	0.15	0.0110	

<---------- TRAVEL TIME TABLE ---------->

DEPTH (m)	ELEV (m)	VOLUME (cu.m.)	FLOW RATE (cms)	VELOCITY (m/s)	TRAV.TIME (min)
0.01	0.01	.303E+00	0.0	0.16	2.52
0.02	0.02	.121E+01	0.0	0.25	1.59
0.02	0.02	.270E+01	0.0	0.36	1.14
0.03	0.03	.433E+01	0.1	0.49	0.83
0.04	0.04	.596E+01	0.1	0.60	0.67
0.05	0.05	.759E+01	0.2	0.71	0.57
0.06	0.06	.922E+01	0.3	0.81	0.50
0.06	0.06	.109E+02	0.4	0.90	0.45
0.07	0.07	.125E+02	0.5	0.99	0.41
0.08	0.08	.141E+02	0.6	1.07	0.38
0.09	0.09	.158E+02	0.7	1.15	0.35
0.09	0.09	.174E+02	0.9	1.23	0.33
0.10	0.10	.190E+02	1.0	1.31	0.31
0.11	0.11	.207E+02	1.2	1.38	0.29
0.12	0.12	.223E+02	1.3	1.45	0.28
0.13	0.13	.239E+02	1.5	1.52	0.27
0.13	0.13	.256E+02	1.7	1.59	0.25
0.14	0.14	.272E+02	1.9	1.66	0.24
0.15	0.15	.288E+02	2.0	1.73	0.23

**** WARNING: TRAVEL TIME TABLE EXCEEDED

		<---- hydrograph ---->				<-pipe / channel->	
		AREA (ha)	QPEAK (cms)	TPEAK (hrs)	R.V. (mm)	MAX DEPTH (m)	MAX VEL (m/s)
INFLOW : ID= 2 (0011)		102.05	6.66	7.08	139.71	0.15	1.71
OUTFLOW: ID= 1 (19001)		102.05	6.66	7.08	139.71	0.15	1.71

CALIB

| STANDHYD (1900)| Area (ha)= 0.05
|ID= 1 DT= 5.0 min | Total Imp(%)= 89.00 Dir. Conn.(%)= 88.00

		IMPERVIOUS	PERVIOUS (i)
Surface Area	(ha)=	0.04	0.01
Dep. Storage	(mm)=	1.00	1.50
Average Slope	(%)=	1.00	2.00
Length	(m)=	18.26	40.00
Mannings n	=	0.013	0.250

NOTE: RAINFALL WAS TRANSFORMED TO 5.0 MIN. TIME STEP.

---- TRANSFORMED HYETOGRAPH ----

TIME hrs	RAIN mm/hr	TIME hrs	RAIN mm/hr	TIME hrs	RAIN mm/hr	TIME hrs	RAIN mm/hr
0.083	15.00	3.333	3.00	6.583	43.00	9.83	13.00
0.167	15.00	3.417	3.00	6.667	43.00	9.92	13.00
0.250	15.00	3.500	3.00	6.750	43.00	10.00	13.00
0.333	15.00	3.583	3.00	6.833	43.00	10.08	13.00
0.417	15.00	3.667	3.00	6.917	43.00	10.17	13.00
0.500	15.00	3.750	3.00	7.000	43.00	10.25	13.00
0.583	15.00	3.833	3.00	7.083	20.00	10.33	13.00
0.667	15.00	3.917	3.00	7.167	20.00	10.42	13.00
0.750	15.00	4.000	3.00	7.250	20.00	10.50	13.00
0.833	15.00	4.083	5.00	7.333	20.00	10.58	13.00
0.917	15.00	4.167	5.00	7.417	20.00	10.67	13.00
1.000	15.00	4.250	5.00	7.500	20.00	10.75	13.00
1.083	20.00	4.333	5.00	7.583	20.00	10.83	13.00
1.167	20.00	4.417	5.00	7.667	20.00	10.92	13.00
1.250	20.00	4.500	5.00	7.750	20.00	11.00	13.00
1.333	20.00	4.583	5.00	7.833	20.00	11.08	8.00
1.417	20.00	4.667	5.00	7.917	20.00	11.17	8.00
1.500	20.00	4.750	5.00	8.000	20.00	11.25	8.00
1.583	20.00	4.833	5.00	8.083	23.00	11.33	8.00
1.667	20.00	4.917	5.00	8.167	23.00	11.42	8.00
1.750	20.00	5.000	5.00	8.250	23.00	11.50	8.00
1.833	20.00	5.083	20.00	8.333	23.00	11.58	8.00
1.917	20.00	5.167	20.00	8.417	23.00	11.67	8.00
2.000	20.00	5.250	20.00	8.500	23.00	11.75	8.00
2.083	10.00	5.333	20.00	8.583	23.00	11.83	8.00
2.167	10.00	5.417	20.00	8.667	23.00	11.92	8.00
2.250	10.00	5.500	20.00	8.750	23.00	12.00	8.00
2.333	10.00	5.583	20.00	8.833	23.00	12.08	0.00
2.417	10.00	5.667	20.00	8.917	23.00	12.17	0.00
2.500	10.00	5.750	20.00	9.000	23.00	12.25	0.00
2.583	10.00	5.833	20.00	9.083	13.00	12.33	0.00
2.667	10.00	5.917	20.00	9.167	13.00	12.42	0.00
2.750	10.00	6.000	20.00	9.250	13.00	12.50	0.00
2.833	10.00	6.083	43.00	9.333	13.00	12.58	0.00
2.917	10.00	6.167	43.00	9.417	13.00	12.67	0.00
3.000	10.00	6.250	43.00	9.500	13.00	12.75	0.00
3.083	3.00	6.333	43.00	9.583	13.00	12.83	0.00
3.167	3.00	6.417	43.00	9.667	13.00	12.92	0.00
3.250	3.00	6.500	43.00	9.750	13.00	13.00	0.00

Max.Eff.Inten.(mm/hr)=		43.00	46.83	
over (min)		5.00	10.00	
Storage Coeff. (min)=		1.29 (ii)	5.60 (ii)	
Unit Hyd. Tpeak (min)=		5.00	10.00	
Unit Hyd. peak (cms)=		0.33	0.15	
				TOTALS
PEAK FLOW	(cms)=	0.01	0.00	0.006 (iii)
TIME TO PEAK	(hrs)=	6.33	7.00	6.92

```
     RUNOFF VOLUME    (mm)=     192.00       186.99         191.36
     TOTAL RAINFALL   (mm)=     193.00       193.00         193.00
     RUNOFF COEFFICIENT   =       0.99         0.97           0.99

***** WARNING: STORAGE COEFF. IS SMALLER THAN TIME STEP!

       (i) CN PROCEDURE SELECTED FOR PERVIOUS LOSSES:
            CN*  =  98.0    Ia = Dep. Storage  (Above)
      (ii) TIME STEP (DT) SHOULD BE SMALLER OR EQUAL
           THAN THE STORAGE COEFFICIENT.
     (iii) PEAK FLOW DOES NOT INCLUDE BASEFLOW IF ANY.

--------------------------------------------------------------------------------


--------------------
| ADD HYD  ( 19000)|
|   1 +  2 =  3    |          AREA    QPEAK    TPEAK     R.V.
--------------------          (ha)    (cms)    (hrs)     (mm)
        ID1= 1 (  1900):     0.05    0.006     6.92   191.36
      + ID2= 2 ( 19001):   102.05    6.664     7.08   139.71
        ==========================================================
        ID = 3 ( 19000):   102.10    6.667     7.08   139.73

     NOTE:  PEAK FLOWS DO NOT INCLUDE BASEFLOWS IF ANY.
--------------------------------------------------------------------------------
--------------------
| CALIB            |
| STANDHYD (  1802)|   Area    (ha)=   0.45
|ID= 1 DT= 5.0 min |   Total Imp(%)=  63.00   Dir. Conn.(%)=  46.00
--------------------
                              IMPERVIOUS    PERVIOUS (i)
     Surface Area     (ha)=       0.28          0.17
     Dep. Storage     (mm)=       1.00          1.50
     Average Slope     (%)=       1.00          2.00
     Length            (m)=      54.77         40.00
     Mannings n             =     0.013         0.250

         NOTE:  RAINFALL WAS TRANSFORMED TO   5.0 MIN. TIME STEP.


                          ---- TRANSFORMED HYETOGRAPH ----
  TIME     RAIN |  TIME     RAIN |'  TIME     RAIN |  TIME     RAIN
   hrs   mm/hr |   hrs   mm/hr |'   hrs   mm/hr |   hrs   mm/hr
 0.083   15.00 | 3.333    3.00 | 6.583   43.00 |  9.83   13.00
 0.167   15.00 | 3.417    3.00 | 6.667   43.00 |  9.92   13.00
 0.250   15.00 | 3.500    3.00 | 6.750   43.00 | 10.00   13.00
 0.333   15.00 | 3.583    3.00 | 6.833   43.00 | 10.08   13.00
 0.417   15.00 | 3.667    3.00 | 6.917   43.00 | 10.17   13.00
 0.500   15.00 | 3.750    3.00 | 7.000   43.00 | 10.25   13.00
 0.583   15.00 | 3.833    3.00 | 7.083   20.00 | 10.33   13.00
 0.667   15.00 | 3.917    3.00 | 7.167   20.00 | 10.42   13.00
 0.750   15.00 | 4.000    3.00 | 7.250   20.00 | 10.50   13.00
 0.833   15.00 | 4.083    5.00 | 7.333   20.00 | 10.58   13.00
 0.917   15.00 | 4.167    5.00 | 7.417   20.00 | 10.67   13.00
 1.000   15.00 | 4.250    5.00 | 7.500   20.00 | 10.75   13.00
 1.083   20.00 | 4.333    5.00 | 7.583   20.00 | 10.83   13.00
 1.167   20.00 | 4.417    5.00 | 7.667   20.00 | 10.92   13.00
 1.250   20.00 | 4.500    5.00 | 7.750   20.00 | 11.00   13.00
 1.333   20.00 | 4.583    5.00 | 7.833   20.00 | 11.08    8.00
 1.417   20.00 | 4.667    5.00 | 7.917   20.00 | 11.17    8.00
 1.500   20.00 | 4.750    5.00 | 8.000   20.00 | 11.25    8.00
 1.583   20.00 | 4.833    5.00 | 8.083   23.00 | 11.33    8.00
 1.667   20.00 | 4.917    5.00 | 8.167   23.00 | 11.42    8.00
 1.750   20.00 | 5.000    5.00 | 8.250   23.00 | 11.50    8.00
```

1.833	20.00	5.083	20.00	8.333	23.00	11.58	8.00
1.917	20.00	5.167	20.00	8.417	23.00	11.67	8.00
2.000	20.00	5.250	20.00	8.500	23.00	11.75	8.00
2.083	10.00	5.333	20.00	8.583	23.00	11.83	8.00
2.167	10.00	5.417	20.00	8.667	23.00	11.92	8.00
2.250	10.00	5.500	20.00	8.750	23.00	12.00	8.00
2.333	10.00	5.583	20.00	8.833	23.00	12.08	0.00
2.417	10.00	5.667	20.00	8.917	23.00	12.17	0.00
2.500	10.00	5.750	20.00	9.000	23.00	12.25	0.00
2.583	10.00	5.833	20.00	9.083	13.00	12.33	0.00
2.667	10.00	5.917	20.00	9.167	13.00	12.42	0.00
2.750	10.00	6.000	20.00	9.250	13.00	12.50	0.00
2.833	10.00	6.083	43.00	9.333	13.00	12.58	0.00
2.917	10.00	6.167	43.00	9.417	13.00	12.67	0.00
3.000	10.00	6.250	43.00	9.500	13.00	12.75	0.00
3.083	3.00	6.333	43.00	9.583	13.00	12.83	0.00
3.167	3.00	6.417	43.00	9.667	13.00	12.92	0.00
3.250	3.00	6.500	43.00	9.750	13.00	13.00	0.00

			TOTALS
Max.Eff.Inten.(mm/hr)=	43.00	57.35	
over (min)	5.00	15.00	
Storage Coeff. (min)=	2.50 (ii)	11.31 (ii)	
Unit Hyd. Tpeak (min)=	5.00	15.00	
Unit Hyd. peak (cms)=	0.29	0.09	
PEAK FLOW (cms)=	0.02	0.03	0.051 (iii)
TIME TO PEAK (hrs)=	6.58	7.00	7.00
RUNOFF VOLUME (mm)=	192.00	154.69	171.84
TOTAL RAINFALL (mm)=	193.00	193.00	193.00
RUNOFF COEFFICIENT =	0.99	0.80	0.89

***** WARNING: STORAGE COEFF. IS SMALLER THAN TIME STEP!

(i) CN PROCEDURE SELECTED FOR PERVIOUS LOSSES:
CN* = 79.0 Ia = Dep. Storage (Above)
(ii) TIME STEP (DT) SHOULD BE SMALLER OR EQUAL
THAN THE STORAGE COEFFICIENT.
(iii) PEAK FLOW DOES NOT INCLUDE BASEFLOW IF ANY.

ADD HYD (0010)		AREA	QPEAK	TPEAK	R.V.
1 + 2 = 3		(ha)	(cms)	(hrs)	(mm)
	ID1= 1 (1802):	0.45	0.051	7.00	171.84
+	ID2= 2 (19000):	102.10	6.667	7.08	139.73
	ID = 3 (0010):	102.55	6.706	7.08	139.88

NOTE: PEAK FLOWS DO NOT INCLUDE BASEFLOWS IF ANY.

CALIB STANDHYD (1801)	Area (ha)= 0.13		
ID= 1 DT= 5.0 min	Total Imp(%)= 84.00	Dir. Conn.(%)= 83.00	
	IMPERVIOUS	PERVIOUS (i)	
Surface Area (ha)=	0.11	0.02	
Dep. Storage (mm)=	1.00	1.50	
Average Slope (%)=	1.00	2.00	
Length (m)=	29.44	40.00	
Mannings n =	0.013	0.250	

NOTE: RAINFALL WAS TRANSFORMED TO 5.0 MIN. TIME STEP.

---- TRANSFORMED HYETOGRAPH ----

TIME hrs	RAIN mm/hr	TIME hrs	RAIN mm/hr	TIME hrs	RAIN mm/hr	TIME hrs	RAIN mm/hr
0.083	15.00	3.333	3.00	6.583	43.00	9.83	13.00
0.167	15.00	3.417	3.00	6.667	43.00	9.92	13.00
0.250	15.00	3.500	3.00	6.750	43.00	10.00	13.00
0.333	15.00	3.583	3.00	6.833	43.00	10.08	13.00
0.417	15.00	3.667	3.00	6.917	43.00	10.17	13.00
0.500	15.00	3.750	3.00	7.000	43.00	10.25	13.00
0.583	15.00	3.833	3.00	7.083	20.00	10.33	13.00
0.667	15.00	3.917	3.00	7.167	20.00	10.42	13.00
0.750	15.00	4.000	3.00	7.250	20.00	10.50	13.00
0.833	15.00	4.083	5.00	7.333	20.00	10.58	13.00
0.917	15.00	4.167	5.00	7.417	20.00	10.67	13.00
1.000	15.00	4.250	5.00	7.500	20.00	10.75	13.00
1.083	20.00	4.333	5.00	7.583	20.00	10.83	13.00
1.167	20.00	4.417	5.00	7.667	20.00	10.92	13.00
1.250	20.00	4.500	5.00	7.750	20.00	11.00	13.00
1.333	20.00	4.583	5.00	7.833	20.00	11.08	8.00
1.417	20.00	4.667	5.00	7.917	20.00	11.17	8.00
1.500	20.00	4.750	5.00	8.000	20.00	11.25	8.00
1.583	20.00	4.833	5.00	8.083	23.00	11.33	8.00
1.667	20.00	4.917	5.00	8.167	23.00	11.42	8.00
1.750	20.00	5.000	5.00	8.250	23.00	11.50	8.00
1.833	20.00	5.083	20.00	8.333	23.00	11.58	8.00
1.917	20.00	5.167	20.00	8.417	23.00	11.67	8.00
2.000	20.00	5.250	20.00	8.500	23.00	11.75	8.00
2.083	10.00	5.333	20.00	8.583	23.00	11.83	8.00
2.167	10.00	5.417	20.00	8.667	23.00	11.92	8.00
2.250	10.00	5.500	20.00	8.750	23.00	12.00	8.00
2.333	10.00	5.583	20.00	8.833	23.00	12.08	0.00
2.417	10.00	5.667	20.00	8.917	23.00	12.17	0.00
2.500	10.00	5.750	20.00	9.000	23.00	12.25	0.00
2.583	10.00	5.833	20.00	9.083	13.00	12.33	0.00
2.667	10.00	5.917	20.00	9.167	13.00	12.42	0.00
2.750	10.00	6.000	20.00	9.250	13.00	12.50	0.00
2.833	10.00	6.083	43.00	9.333	13.00	12.58	0.00
2.917	10.00	6.167	43.00	9.417	13.00	12.67	0.00
3.000	10.00	6.250	43.00	9.500	13.00	12.75	0.00
3.083	3.00	6.333	43.00	9.583	13.00	12.83	0.00
3.167	3.00	6.417	43.00	9.667	13.00	12.92	0.00
3.250	3.00	6.500	43.00	9.750	13.00	13.00	0.00

Max.Eff.Inten.(mm/hr)=	43.00	43.98	
over (min)	5.00	15.00	
Storage Coeff. (min)=	1.72 (ii)	11.52 (ii)	
Unit Hyd. Tpeak (min)=	5.00	15.00	
Unit Hyd. peak (cms)=	0.32	0.09	
			TOTALS
PEAK FLOW (cms)=	0.01	0.00	0.015 (iii)
TIME TO PEAK (hrs)=	6.42	7.00	7.00
RUNOFF VOLUME (mm)=	192.00	168.26	187.90
TOTAL RAINFALL (mm)=	193.00	193.00	193.00
RUNOFF COEFFICIENT =	0.99	0.87	0.97

***** WARNING: STORAGE COEFF. IS SMALLER THAN TIME STEP!

(i) CN PROCEDURE SELECTED FOR PERVIOUS LOSSES:
CN* = 90.0 Ia = Dep. Storage (Above)

(ii) TIME STEP (DT) SHOULD BE SMALLER OR EQUAL
THAN THE STORAGE COEFFICIENT.

(iii) PEAK FLOW DOES NOT INCLUDE BASEFLOW IF ANY.

ADD HYD (0009)		AREA	QPEAK	TPEAK	R.V.
		(ha)	(cms)	(hrs)	(mm)
1 + 2 = 3	ID1= 1 (0010):	102.55	6.706	7.08	139.88
	+ ID2= 2 (1801):	0.13	0.015	7.00	187.90
	ID = 3 (0009):	102.68	6.714	7.08	139.94

NOTE: PEAK FLOWS DO NOT INCLUDE BASEFLOWS IF ANY.

ROUTE CHN(18001)	
IN= 2---> OUT= 1	Routing time step (min)'= 5.00

<------ DATA FOR SECTION (1.1) ------>

Distance	Elevation	Manning	
0.00	0.15	0.0110	
0.01	0.00	0.0110 /0.0110	Main Channel
4.26	0.02	0.0110	Main Channel
8.51	0.00	0.0110 /0.0110	Main Channel
8.52	0.15	0.0110	

<---------- TRAVEL TIME TABLE ---------->

DEPTH (m)	ELEV (m)	VOLUME (cu.m.)	FLOW RATE (cms)	VELOCITY (m/s)	TRAV.TIME (min)
0.01	0.01	.893E+00	0.0	0.16	7.43
0.02	0.02	.357E+01	0.0	0.25	4.68
0.02	0.02	.795E+01	0.0	0.36	3.35
0.03	0.03	.128E+02	0.1	0.49	2.44
0.04	0.04	.176E+02	0.1	0.60	1.97
0.05	0.05	.224E+02	0.2	0.71	1.68
0.06	0.06	.272E+02	0.3	0.81	1.48
0.06	0.06	.320E+02	0.4	0.90	1.32
0.07	0.07	.368E+02	0.5	0.99	1.21
0.08	0.08	.416E+02	0.6	1.07	1.11
0.09	0.09	.464E+02	0.7	1.15	1.03
0.09	0.09	.512E+02	0.9	1.23	0.97
0.10	0.10	.560E+02	1.0	1.31	0.91
0.11	0.11	.609E+02	1.2	1.38	0.86
0.12	0.12	.657E+02	1.3	1.45	0.82
0.13	0.13	.705E+02	1.5	1.52	0.78
0.13	0.13	.753E+02	1.7	1.59	0.75
0.14	0.14	.801E+02	1.9	1.66	0.72
0.15	0.15	.849E+02	2.0	1.73	0.69

**** WARNING: TRAVEL TIME TABLE EXCEEDED

		<---- hydrograph ---->				<-pipe / channel->	
		AREA (ha)	QPEAK (cms)	TPEAK (hrs)	R.V. (mm)	MAX DEPTH (m)	MAX VEL (m/s)
INFLOW :	ID= 2 (0009)	102.68	6.71	7.08	139.94	0.15	1.72
OUTFLOW:	ID= 1 (18001)	102.68	6.72	7.08	139.94	0.15	1.72

CALIB		
STANDHYD (1800)	Area (ha)=	0.14
ID= 1 DT= 5.0 min	Total Imp(%)=	89.00 Dir. Conn.(%)= 89.00

		IMPERVIOUS	PERVIOUS (i)
Surface Area	(ha)=	0.12	0.02
Dep. Storage	(mm)=	1.00	1.50
Average Slope	(%)=	1.00	2.00
Length	(m)=	30.55	40.00
Mannings n	=	0.013	0.250

NOTE: RAINFALL WAS TRANSFORMED TO 5.0 MIN. TIME STEP.

---- TRANSFORMED HYETOGRAPH ----

TIME hrs	RAIN mm/hr	TIME hrs	RAIN mm/hr	TIME hrs	RAIN mm/hr	TIME hrs	RAIN mm/hr
0.083	15.00	3.333	3.00	6.583	43.00	9.83	13.00
0.167	15.00	3.417	3.00	6.667	43.00	9.92	13.00
0.250	15.00	3.500	3.00	6.750	43.00	10.00	13.00
0.333	15.00	3.583	3.00	6.833	43.00	10.08	13.00
0.417	15.00	3.667	3.00	6.917	43.00	10.17	13.00
0.500	15.00	3.750	3.00	7.000	43.00	10.25	13.00
0.583	15.00	3.833	3.00	7.083	20.00	10.33	13.00
0.667	15.00	3.917	3.00	7.167	20.00	10.42	13.00
0.750	15.00	4.000	3.00	7.250	20.00	10.50	13.00
0.833	15.00	4.083	5.00	7.333	20.00	10.58	13.00
0.917	15.00	4.167	5.00	7.417	20.00	10.67	13.00
1.000	15.00	4.250	5.00	7.500	20.00	10.75	13.00
1.083	20.00	4.333	5.00	7.583	20.00	10.83	13.00
1.167	20.00	4.417	5.00	7.667	20.00	10.92	13.00
1.250	20.00	4.500	5.00	7.750	20.00	11.00	13.00
1.333	20.00	4.583	5.00	7.833	20.00	11.08	8.00
1.417	20.00	4.667	5.00	7.917	20.00	11.17	8.00
1.500	20.00	4.750	5.00	8.000	20.00	11.25	8.00
1.583	20.00	4.833	5.00	8.083	23.00	11.33	8.00
1.667	20.00	4.917	5.00	8.167	23.00	11.42	8.00
1.750	20.00	5.000	5.00	8.250	23.00	11.50	8.00
1.833	20.00	5.083	20.00	8.333	23.00	11.58	8.00
1.917	20.00	5.167	20.00	8.417	23.00	11.67	8.00
2.000	20.00	5.250	20.00	8.500	23.00	11.75	8.00
2.083	10.00	5.333	20.00	8.583	23.00	11.83	8.00
2.167	10.00	5.417	20.00	8.667	23.00	11.92	8.00
2.250	10.00	5.500	20.00	8.750	23.00	12.00	8.00
2.333	10.00	5.583	20.00	8.833	23.00	12.08	0.00
2.417	10.00	5.667	20.00	8.917	23.00	12.17	0.00
2.500	10.00	5.750	20.00	9.000	23.00	12.25	0.00
2.583	10.00	5.833	20.00	9.083	13.00	12.33	0.00
2.667	10.00	5.917	20.00	9.167	13.00	12.42	0.00
2.750	10.00	6.000	20.00	9.250	13.00	12.50	0.00
2.833	10.00	6.083	43.00	9.333	13.00	12.58	0.00
2.917	10.00	6.167	43.00	9.417	13.00	12.67	0.00
3.000	10.00	6.250	43.00	9.500	13.00	12.75	0.00
3.083	3.00	6.333	43.00	9.583	13.00	12.83	0.00
3.167	3.00	6.417	43.00	9.667	13.00	12.92	0.00
3.250	3.00	6.500	43.00	9.750	13.00	13.00	0.00

Max.Eff.Inten.	(mm/hr)=	43.00	42.91	
	over (min)	5.00	10.00	
Storage Coeff.	(min)=	1.76 (ii)	6.04 (ii)	
Unit Hyd. Tpeak	(min)=	5.00	10.00	
Unit Hyd. peak	(cms)=	0.32	0.15	
				TOTALS
PEAK FLOW	(cms)=	0.01	0.00	0.017 (iii)
TIME TO PEAK	(hrs)=	6.42	7.00	7.00
RUNOFF VOLUME	(mm)=	192.00	186.45	191.37
TOTAL RAINFALL	(mm)=	193.00	193.00	193.00

RUNOFF COEFFICIENT = 0.99 0.97 0.99

***** WARNING: STORAGE COEFF. IS SMALLER THAN TIME STEP!

(i) CN PROCEDURE SELECTED FOR PERVIOUS LOSSES:
CN* = 98.0 Ia = Dep. Storage (Above)
(ii) TIME STEP (DT) SHOULD BE SMALLER OR EQUAL
THAN THE STORAGE COEFFICIENT.
(iii) PEAK FLOW DOES NOT INCLUDE BASEFLOW IF ANY.

ADD HYD (18000)		AREA	QPEAK	TPEAK	R.V.
1 + 2 = 3		(ha)	(cms)	(hrs)	(mm)
	ID1= 1 (1800):	0.14	0.017	7.00	191.37
	+ ID2= 2 (18001):	102.68	6.718	7.08	139.94
	ID = 3 (18000):	102.82	6.727	7.08	140.01

NOTE: PEAK FLOWS DO NOT INCLUDE BASEFLOWS IF ANY.

CALIB				
STANDHYD (1702)	Area (ha)= 0.07			
ID= 1 DT= 5.0 min	Total Imp(%)= 83.00	Dir. Conn.(%)= 80.00		

		IMPERVIOUS	PERVIOUS (i)
Surface Area	(ha)=	0.06	0.01
Dep. Storage	(mm)=	1.00	1.50
Average Slope	(%)=	1.00	2.00
Length	(m)=	21.60	40.00
Mannings n	=	0.013	0.250

NOTE: RAINFALL WAS TRANSFORMED TO 5.0 MIN. TIME STEP.

---- TRANSFORMED HYETOGRAPH ----

TIME hrs	RAIN mm/hr	TIME hrs	RAIN mm/hr	TIME hrs	RAIN mm/hr	TIME hrs	RAIN mm/hr
0.083	15.00	3.333	3.00	6.583	43.00	9.83	13.00
0.167	15.00	3.417	3.00	6.667	43.00	9.92	13.00
0.250	15.00	3.500	3.00	6.750	43.00	10.00	13.00
0.333	15.00	3.583	3.00	6.833	43.00	10.08	13.00
0.417	15.00	3.667	3.00	6.917	43.00	10.17	13.00
0.500	15.00	3.750	3.00	7.000	43.00	10.25	13.00
0.583	15.00	3.833	3.00	7.083	20.00	10.33	13.00
0.667	15.00	3.917	3.00	7.167	20.00	10.42	13.00
0.750	15.00	4.000	3.00	7.250	20.00	10.50	13.00
0.833	15.00	4.083	5.00	7.333	20.00	10.58	13.00
0.917	15.00	4.167	5.00	7.417	20.00	10.67	13.00
1.000	15.00	4.250	5.00	7.500	20.00	10.75	13.00
1.083	20.00	4.333	5.00	7.583	20.00	10.83	13.00
1.167	20.00	4.417	5.00	7.667	20.00	10.92	13.00
1.250	20.00	4.500	5.00	7.750	20.00	11.00	13.00
1.333	20.00	4.583	5.00	7.833	20.00	11.08	8.00
1.417	20.00	4.667	5.00	7.917	20.00	11.17	8.00
1.500	20.00	4.750	5.00	8.000	20.00	11.25	8.00
1.583	20.00	4.833	5.00	8.083	23.00	11.33	8.00
1.667	20.00	4.917	5.00	8.167	23.00	11.42	8.00
1.750	20.00	5.000	5.00	8.250	23.00	11.50	8.00
1.833	20.00	5.083	20.00	8.333	23.00	11.58	8.00
1.917	20.00	5.167	20.00	8.417	23.00	11.67	8.00

2.000	20.00	5.250	20.00	8.500	23.00	11.75	8.00
2.083	10.00	5.333	20.00	8.583	23.00	11.83	8.00
2.167	10.00	5.417	20.00	8.667	23.00	11.92	8.00
2.250	10.00	5.500	20.00	8.750	23.00	12.00	8.00
2.333	10.00	5.583	20.00	8.833	23.00	12.08	0.00
2.417	10.00	5.667	20.00	8.917	23.00	12.17	0.00
2.500	10.00	5.750	20.00	9.000	23.00	12.25	0.00
2.583	10.00	5.833	20.00	9.083	13.00	12.33	0.00
2.667	10.00	5.917	20.00	9.167	13.00	12.42	0.00
2.750	10.00	6.000	20.00	9.250	13.00	12.50	0.00
2.833	10.00	6.083	43.00	9.333	13.00	12.58	0.00
2.917	10.00	6.167	43.00	9.417	13.00	12.67	0.00
3.000	10.00	6.250	43.00	9.500	13.00	12.75	0.00
3.083	3.00	6.333	43.00	9.583	13.00	12.83	0.00
3.167	3.00	6.417	43.00	9.667	13.00	12.92	0.00
3.250	3.00	6.500	43.00	9.750	13.00	13.00	0.00

Max.Eff.Inten.(mm/hr)=	43.00	48.99	
over (min)	5.00	15.00	
Storage Coeff. (min)=	1.43 (ii)	10.82 (ii)	
Unit Hyd. Tpeak (min)=	5.00	15.00	
Unit Hyd. peak (cms)=	0.33	0.09	
			TOTALS
PEAK FLOW (cms)=	0.01	0.00	0.008 (iii)
TIME TO PEAK (hrs)=	6.33	7.00	7.00
RUNOFF VOLUME (mm)=	192.00	170.40	187.58
TOTAL RAINFALL (mm)=	193.00	193.00	193.00
RUNOFF COEFFICIENT =	0.99	0.88	0.97

***** WARNING: STORAGE COEFF. IS SMALLER THAN TIME STEP!

(i) CN PROCEDURE SELECTED FOR PERVIOUS LOSSES:
CN* = 90.0 Ia = Dep. Storage (Above)
(ii) TIME STEP (DT) SHOULD BE SMALLER OR EQUAL
THAN THE STORAGE COEFFICIENT.
(iii) PEAK FLOW DOES NOT INCLUDE BASEFLOW IF ANY.

ADD HYD (0008)		AREA	QPEAK	TPEAK	R.V.
		(ha)	(cms)	(hrs)	(mm)
1 + 2 = 3	ID1= 1 (1702):	0.07	0.008	7.00	187.58
	+ ID2= 2 (18000):	102.82	6.727	7.08	140.01
	ID = 3 (0008):	102.89	6.732	7.08	140.04

NOTE: PEAK FLOWS DO NOT INCLUDE BASEFLOWS IF ANY.

CALIB STANDHYD (1701)	Area (ha)= 0.38		
ID= 1 DT= 5.0 min	Total Imp(%)= 51.00	Dir. Conn.(%)= 27.00	
	IMPERVIOUS	PERVIOUS (i)	
Surface Area (ha)=	0.19	0.19	
Dep. Storage (mm)=	1.00	1.50	
Average Slope (%)=	1.00	2.00	
Length (m)=	50.33	40.00	
Mannings n =	0.013	0.250	

NOTE: RAINFALL WAS TRANSFORMED TO 5.0 MIN. TIME STEP.

---- TRANSFORMED HYETOGRAPH ----

TIME hrs	RAIN mm/hr	TIME hrs	RAIN mm/hr	TIME hrs	RAIN mm/hr	TIME hrs	RAIN mm/hr
0.083	15.00	3.333	3.00	6.583	43.00	9.83	13.00
0.167	15.00	3.417	3.00	6.667	43.00	9.92	13.00
0.250	15.00	3.500	3.00	6.750	43.00	10.00	13.00
0.333	15.00	3.583	3.00	6.833	43.00	10.08	13.00
0.417	15.00	3.667	3.00	6.917	43.00	10.17	13.00
0.500	15.00	3.750	3.00	7.000	43.00	10.25	13.00
0.583	15.00	3.833	3.00	7.083	20.00	10.33	13.00
0.667	15.00	3.917	3.00	7.167	20.00	10.42	13.00
0.750	15.00	4.000	3.00	7.250	20.00	10.50	13.00
0.833	15.00	4.083	5.00	7.333	20.00	10.58	13.00
0.917	15.00	4.167	5.00	7.417	20.00	10.67	13.00
1.000	15.00	4.250	5.00	7.500	20.00	10.75	13.00
1.083	20.00	4.333	5.00	7.583	20.00	10.83	13.00
1.167	20.00	4.417	5.00	7.667	20.00	10.92	13.00
1.250	20.00	4.500	5.00	7.750	20.00	11.00	13.00
1.333	20.00	4.583	5.00	7.833	20.00	11.08	8.00
1.417	20.00	4.667	5.00	7.917	20.00	11.17	8.00
1.500	20.00	4.750	5.00	8.000	20.00	11.25	8.00
1.583	20.00	4.833	5.00	8.083	23.00	11.33	8.00
1.667	20.00	4.917	5.00	8.167	23.00	11.42	8.00
1.750	20.00	5.000	5.00	8.250	23.00	11.50	8.00
1.833	20.00	5.083	20.00	8.333	23.00	11.58	8.00
1.917	20.00	5.167	20.00	8.417	23.00	11.67	8.00
2.000	20.00	5.250	20.00	8.500	23.00	11.75	8.00
2.083	10.00	5.333	20.00	8.583	23.00	11.83	8.00
2.167	10.00	5.417	20.00	8.667	23.00	11.92	8.00
2.250	10.00	5.500	20.00	8.750	23.00	12.00	8.00
2.333	10.00	5.583	20.00	8.833	23.00	12.08	0.00
2.417	10.00	5.667	20.00	8.917	23.00	12.17	0.00
2.500	10.00	5.750	20.00	9.000	23.00	12.25	0.00
2.583	10.00	5.833	20.00	9.083	13.00	12.33	0.00
2.667	10.00	5.917	20.00	9.167	13.00	12.42	0.00
2.750	10.00	6.000	20.00	9.250	13.00	12.50	0.00
2.833	10.00	6.083	43.00	9.333	13.00	12.58	0.00
2.917	10.00	6.167	43.00	9.417	13.00	12.67	0.00
3.000	10.00	6.250	43.00	9.500	13.00	12.75	0.00
3.083	3.00	6.333	43.00	9.583	13.00	12.83	0.00
3.167	3.00	6.417	43.00	9.667	13.00	12.92	0.00
3.250	3.00	6.500	43.00	9.750	13.00	13.00	0.00

			TOTALS
Max.Eff.Inten.(mm/hr)=	43.00	55.14	
over (min)	5.00	15.00	
Storage Coeff. (min)=	2.37 (ii)	11.33 (ii)	
Unit Hyd. Tpeak (min)=	5.00	15.00	
Unit Hyd. peak (cms)=	0.30	0.09	
PEAK FLOW (cms)=	0.01	0.03	0.040 (iii)
TIME TO PEAK (hrs)=	6.58	7.00	7.00
RUNOFF VOLUME (mm)=	192.00	142.71	156.00
TOTAL RAINFALL (mm)=	193.00	193.00	193.00
RUNOFF COEFFICIENT =	0.99	0.74	0.81

***** WARNING: STORAGE COEFF. IS SMALLER THAN TIME STEP!

(i) CN PROCEDURE SELECTED FOR PERVIOUS LOSSES:
CN* = 72.0 Ia = Dep. Storage (Above)

(ii) TIME STEP (DT) SHOULD BE SMALLER OR EQUAL
THAN THE STORAGE COEFFICIENT.

(iii) PEAK FLOW DOES NOT INCLUDE BASEFLOW IF ANY.

```
--------------------
| ADD HYD  (  0007)|
|   1 +  2 =  3    |          AREA     QPEAK     TPEAK      R.V.
--------------------          (ha)     (cms)     (hrs)      (mm)
        ID1= 1 (  1701):      0.38    0.040      7.00    156.00
      + ID2= 2 (  0008):    102.89    6.732      7.08    140.04
        ==========================================================
        ID = 3 (  0007):    103.27    6.765      7.08    140.10

     NOTE:  PEAK FLOWS DO NOT INCLUDE BASEFLOWS IF ANY.
--------------------------------------------------------------------------------
--------------------
| ROUTE CHN( 17001)|
| IN= 2---> OUT= 1 |     Routing time step (min)'=  5.00
--------------------
               <------ DATA FOR SECTION (   1.1) ------>
               Distance       Elevation        Manning
                   0.00           0.15          0.0110
                   0.01           0.00     0.0110 /0.0110  Main Channel
                   4.26           0.02          0.0110      Main Channel
                   8.51           0.00     0.0110 /0.0110  Main Channel
                   8.52           0.15          0.0110

      <---------------------- TRAVEL TIME TABLE ---------------------->
       DEPTH     ELEV       VOLUME     FLOW RATE     VELOCITY   TRAV.TIME
        (m)       (m)      (cu.m.)       (cms)         (m/s)      (min)
       0.01      0.01     .464E+00        0.0           0.16       3.86
       0.02      0.02     .185E+01        0.0           0.25       2.43
       0.02      0.02     .413E+01        0.0           0.36       1.74
       0.03      0.03     .663E+01        0.1           0.49       1.27
       0.04      0.04     .912E+01        0.1           0.60       1.03
       0.05      0.05     .116E+02        0.2           0.71       0.87
       0.06      0.06     .141E+02        0.3           0.81       0.77
       0.06      0.06     .166E+02        0.4           0.90       0.69
       0.07      0.07     .191E+02        0.5           0.99       0.63
       0.08      0.08     .216E+02        0.6           1.07       0.58
       0.09      0.09     .241E+02        0.7           1.15       0.54
       0.09      0.09     .266E+02        0.9           1.23       0.50
       0.10      0.10     .291E+02        1.0           1.31       0.47
       0.11      0.11     .316E+02        1.2           1.38       0.45
       0.12      0.12     .341E+02        1.3           1.45       0.43
       0.13      0.13     .366E+02        1.5           1.52       0.41
       0.13      0.13     .391E+02        1.7           1.59       0.39
       0.14      0.14     .416E+02        1.9           1.66       0.37
       0.15      0.15     .441E+02        2.0           1.73       0.36

     **** WARNING:  TRAVEL TIME TABLE EXCEEDED
                                    <---- hydrograph ---->   <-pipe / channel->
                                AREA    QPEAK   TPEAK   R.V.   MAX DEPTH  MAX VEL
                                (ha)    (cms)   (hrs)   (mm)      (m)       (m/s)
   INFLOW : ID= 2 (  0007)  103.27     6.76    7.08 140.10      0.15       1.73
   OUTFLOW: ID= 1 ( 17001)  103.27     6.77    7.08 140.10      0.15       1.72



--------------------------------------------------------------------------------
--------------------
| CALIB            |
| STANDHYD (  1700)|   Area    (ha)=   0.12
|ID= 1 DT= 5.0 min |   Total Imp(%)=  85.00   Dir. Conn.(%)=  81.00
--------------------
                            IMPERVIOUS    PERVIOUS (i)
```

Surface Area	(ha)=	0.10	0.02
Dep. Storage	(mm)=	1.00	1.50
Average Slope	(%)=	1.00	2.00
Length	(m)=	28.28	40.00
Mannings n	=	0.013	0.250

NOTE: RAINFALL WAS TRANSFORMED TO 5.0 MIN. TIME STEP.

---- TRANSFORMED HYETOGRAPH ----

TIME hrs	RAIN mm/hr	TIME hrs	RAIN mm/hr	TIME hrs	RAIN mm/hr	TIME hrs	RAIN mm/hr
0.083	15.00	3.333	3.00	6.583	43.00	9.83	13.00
0.167	15.00	3.417	3.00	6.667	43.00	9.92	13.00
0.250	15.00	3.500	3.00	6.750	43.00	10.00	13.00
0.333	15.00	3.583	3.00	6.833	43.00	10.08	13.00
0.417	15.00	3.667	3.00	6.917	43.00	10.17	13.00
0.500	15.00	3.750	3.00	7.000	43.00	10.25	13.00
0.583	15.00	3.833	3.00	7.083	20.00	10.33	13.00
0.667	15.00	3.917	3.00	7.167	20.00	10.42	13.00
0.750	15.00	4.000	3.00	7.250	20.00	10.50	13.00
0.833	15.00	4.083	5.00	7.333	20.00	10.58	13.00
0.917	15.00	4.167	5.00	7.417	20.00	10.67	13.00
1.000	15.00	4.250	5.00	7.500	20.00	10.75	13.00
1.083	20.00	4.333	5.00	7.583	20.00	10.83	13.00
1.167	20.00	4.417	5.00	7.667	20.00	10.92	13.00
1.250	20.00	4.500	5.00	7.750	20.00	11.00	13.00
1.333	20.00	4.583	5.00	7.833	20.00	11.08	8.00
1.417	20.00	4.667	5.00	7.917	20.00	11.17	8.00
1.500	20.00	4.750	5.00	8.000	20.00	11.25	8.00
1.583	20.00	4.833	5.00	8.083	23.00	11.33	8.00
1.667	20.00	4.917	5.00	8.167	23.00	11.42	8.00
1.750	20.00	5.000	5.00	8.250	23.00	11.50	8.00
1.833	20.00	5.083	20.00	8.333	23.00	11.58	8.00
1.917	20.00	5.167	20.00	8.417	23.00	11.67	8.00
2.000	20.00	5.250	20.00	8.500	23.00	11.75	8.00
2.083	10.00	5.333	20.00	8.583	23.00	11.83	8.00
2.167	10.00	5.417	20.00	8.667	23.00	11.92	8.00
2.250	10.00	5.500	20.00	8.750	23.00	12.00	8.00
2.333	10.00	5.583	20.00	8.833	23.00	12.08	0.00
2.417	10.00	5.667	20.00	8.917	23.00	12.17	0.00
2.500	10.00	5.750	20.00	9.000	23.00	12.25	0.00
2.583	10.00	5.833	20.00	9.083	13.00	12.33	0.00
2.667	10.00	5.917	20.00	9.167	13.00	12.42	0.00
2.750	10.00	6.000	20.00	9.250	13.00	12.50	0.00
2.833	10.00	6.083	43.00	9.333	13.00	12.58	0.00
2.917	10.00	6.167	43.00	9.417	13.00	12.67	0.00
3.000	10.00	6.250	43.00	9.500	13.00	12.75	0.00
3.083	3.00	6.333	43.00	9.583	13.00	12.83	0.00
3.167	3.00	6.417	43.00	9.667	13.00	12.92	0.00
3.250	3.00	6.500	43.00	9.750	13.00	13.00	0.00

Max.Eff.Inten.(mm/hr)=		43.00	53.89	
over (min)		5.00	15.00	
Storage Coeff. (min)=		1.68 (ii)	10.72 (ii)	
Unit Hyd. Tpeak (min)=		5.00	15.00	
Unit Hyd. peak (cms)=		0.32	0.09	
				TOTALS
PEAK FLOW	(cms)=	0.01	0.00	0.014 (iii)
TIME TO PEAK	(hrs)=	6.42	7.00	7.00
RUNOFF VOLUME	(mm)=	192.00	179.82	189.62
TOTAL RAINFALL	(mm)=	193.00	193.00	193.00
RUNOFF COEFFICIENT	=	0.99	0.93	0.98

***** WARNING: STORAGE COEFF. IS SMALLER THAN TIME STEP!

(i) CN PROCEDURE SELECTED FOR PERVIOUS LOSSES:
CN* = 94.0 Ia = Dep. Storage (Above)
(ii) TIME STEP (DT) SHOULD BE SMALLER OR EQUAL
THAN THE STORAGE COEFFICIENT.
(iii) PEAK FLOW DOES NOT INCLUDE BASEFLOW IF ANY.

ADD HYD (17000)		AREA	QPEAK	TPEAK	R.V.
1 + 2 = 3		(ha)	(cms)	(hrs)	(mm)
ID1= 1 (1700):		0.12	0.014	7.00	189.62
+ ID2= 2 (17001):		103.27	6.766	7.08	140.10
ID = 3 (17000):		103.39	6.774	7.08	140.15

NOTE: PEAK FLOWS DO NOT INCLUDE BASEFLOWS IF ANY.

CALIB STANDHYD (1601)	ID= 1 DT= 5.0 min	Area (ha)= 0.26 Total Imp(%)= 75.00 Dir. Conn.(%)= 56.00

		IMPERVIOUS	PERVIOUS (i)
Surface Area	(ha)=	0.19	0.06
Dep. Storage	(mm)=	1.00	1.50
Average Slope	(%)=	1.00	2.00
Length	(m)=	41.63	40.00
Mannings n	=	0.013	0.250

NOTE: RAINFALL WAS TRANSFORMED TO 5.0 MIN. TIME STEP.

---- TRANSFORMED HYETOGRAPH ----

TIME hrs	RAIN mm/hr	TIME hrs	RAIN mm/hr	TIME hrs	RAIN mm/hr	TIME hrs	RAIN mm/hr
0.083	15.00	3.333	3.00	6.583	43.00	9.83	13.00
0.167	15.00	3.417	3.00	6.667	43.00	9.92	13.00
0.250	15.00	3.500	3.00	6.750	43.00	10.00	13.00
0.333	15.00	3.583	3.00	6.833	43.00	10.08	13.00
0.417	15.00	3.667	3.00	6.917	43.00	10.17	13.00
0.500	15.00	3.750	3.00	7.000	43.00	10.25	13.00
0.583	15.00	3.833	3.00	7.083	20.00	10.33	13.00
0.667	15.00	3.917	3.00	7.167	20.00	10.42	13.00
0.750	15.00	4.000	3.00	7.250	20.00	10.50	13.00
0.833	15.00	4.083	5.00	7.333	20.00	10.58	13.00
0.917	15.00	4.167	5.00	7.417	20.00	10.67	13.00
1.000	15.00	4.250	5.00	7.500	20.00	10.75	13.00
1.083	20.00	4.333	5.00	7.583	20.00	10.83	13.00
1.167	20.00	4.417	5.00	7.667	20.00	10.92	13.00
1.250	20.00	4.500	5.00	7.750	20.00	11.00	13.00
1.333	20.00	4.583	5.00	7.833	20.00	11.08	8.00
1.417	20.00	4.667	5.00	7.917	20.00	11.17	8.00
1.500	20.00	4.750	5.00	8.000	20.00	11.25	8.00
1.583	20.00	4.833	5.00	8.083	23.00	11.33	8.00
1.667	20.00	4.917	5.00	8.167	23.00	11.42	8.00
1.750	20.00	5.000	5.00	8.250	23.00	11.50	8.00
1.833	20.00	5.083	20.00	8.333	23.00	11.58	8.00
1.917	20.00	5.167	20.00	8.417	23.00	11.67	8.00
2.000	20.00	5.250	20.00	8.500	23.00	11.75	8.00
2.083	10.00	5.333	20.00	8.583	23.00	11.83	8.00

2.167	10.00	5.417	20.00	8.667	23.00	11.92	8.00
2.250	10.00	5.500	20.00	8.750	23.00	12.00	8.00
2.333	10.00	5.583	20.00	8.833	23.00	12.08	0.00
2.417	10.00	5.667	20.00	8.917	23.00	12.17	0.00
2.500	10.00	5.750	20.00	9.000	23.00	12.25	0.00
2.583	10.00	5.833	20.00	9.083	13.00	12.33	0.00
2.667	10.00	5.917	20.00	9.167	13.00	12.42	0.00
2.750	10.00	6.000	20.00	9.250	13.00	12.50	0.00
2.833	10.00	6.083	43.00	9.333	13.00	12.58	0.00
2.917	10.00	6.167	43.00	9.417	13.00	12.67	0.00
3.000	10.00	6.250	43.00	9.500	13.00	12.75	0.00
3.083	3.00	6.333	43.00	9.583	13.00	12.83	0.00
3.167	3.00	6.417	43.00	9.667	13.00	12.92	0.00
3.250	3.00	6.500	43.00	9.750	13.00	13.00	0.00

Max.Eff.Inten.(mm/hr)=	43.00	73.69	
over (min)	5.00	15.00	
Storage Coeff. (min)=	2.12 (ii)	10.09 (ii)	
Unit Hyd. Tpeak (min)=	5.00	15.00	
Unit Hyd. peak (cms)=	0.31	0.10	
			TOTALS
PEAK FLOW (cms)=	0.02	0.01	0.031 (iii)
TIME TO PEAK (hrs)=	6.50	7.00	7.00
RUNOFF VOLUME (mm)=	192.00	172.76	183.51
TOTAL RAINFALL (mm)=	193.00	193.00	193.00
RUNOFF COEFFICIENT =	0.99	0.90	0.95

***** WARNING: STORAGE COEFF. IS SMALLER THAN TIME STEP!

(i) CN PROCEDURE SELECTED FOR PERVIOUS LOSSES:
CN* = 87.0 Ia = Dep. Storage (Above)
(ii) TIME STEP (DT) SHOULD BE SMALLER OR EQUAL
THAN THE STORAGE COEFFICIENT.
(iii) PEAK FLOW DOES NOT INCLUDE BASEFLOW IF ANY.

ADD HYD (0006)		AREA	QPEAK	TPEAK	R.V.
		(ha)	(cms)	(hrs)	(mm)
ID1= 1 (1601):		0.26	0.031	7.00	183.51
+ ID2= 2 (17000):		103.39	6.774	7.08	140.15
ID = 3 (0006):		103.65	6.796	7.08	140.26

NOTE: PEAK FLOWS DO NOT INCLUDE BASEFLOWS IF ANY.

ROUTE CHN(16001)
IN= 2---> OUT= 1 | Routing time step (min)'= 5.00

<------ DATA FOR SECTION (1.1) ------>

Distance	Elevation	Manning	
0.00	0.15	0.0110	
0.01	0.00	0.0110 /0.0110	Main Channel
4.26	0.02	0.0110	Main Channel
8.51	0.00	0.0110 /0.0110	Main Channel
8.52	0.15	0.0110	

<---------- TRAVEL TIME TABLE ---------->

DEPTH (m)	ELEV (m)	VOLUME (cu.m.)	FLOW RATE (cms)	VELOCITY (m/s)	TRAV.TIME (min)
0.01	0.01	.539E+00	0.0	0.16	4.48

0.02	0.02	.215E+01	0.0	0.25	2.82
0.02	0.02	.480E+01	0.0	0.36	2.02
0.03	0.03	.769E+01	0.1	0.49	1.47
0.04	0.04	.106E+02	0.1	0.60	1.19
0.05	0.05	.135E+02	0.2	0.71	1.01
0.06	0.06	.164E+02	0.3	0.81	0.89
0.06	0.06	.193E+02	0.4	0.90	0.80
0.07	0.07	.222E+02	0.5	0.99	0.73
0.08	0.08	.251E+02	0.6	1.07	0.67
0.09	0.09	.280E+02	0.7	1.15	0.62
0.09	0.09	.309E+02	0.9	1.23	0.58
0.10	0.10	.338E+02	1.0	1.31	0.55
0.11	0.11	.367E+02	1.2	1.38	0.52
0.12	0.12	.396E+02	1.3	1.45	0.49
0.13	0.13	.425E+02	1.5	1.52	0.47
0.13	0.13	.454E+02	1.7	1.59	0.45
0.14	0.14	.483E+02	1.9	1.66	0.43
0.15	0.15	.512E+02	2.0	1.73	0.42

**** WARNING: TRAVEL TIME TABLE EXCEEDED

		<---- hydrograph ---->			<-pipe / channel->	
	AREA	QPEAK	TPEAK	R.V.	MAX DEPTH	MAX VEL
	(ha)	(cms)	(hrs)	(mm)	(m)	(m/s)
INFLOW : ID= 2 (0006)	103.65	6.80	7.08	140.26	0.15	1.69
OUTFLOW: ID= 1 (16001)	103.65	6.80	7.08	140.26	0.15	1.70

CALIB STANDHYD (1600) ID= 1 DT= 5.0 min	Area (ha)= 0.15 Total Imp(%)= 86.00 Dir. Conn.(%)= 85.00

		IMPERVIOUS	PERVIOUS (i)
Surface Area	(ha)=	0.13	0.02
Dep. Storage	(mm)=	1.00	1.50
Average Slope	(%)=	1.00	2.00
Length	(m)=	31.62	40.00
Mannings n	=	0.013	0.250

NOTE: RAINFALL WAS TRANSFORMED TO 5.0 MIN. TIME STEP.

---- TRANSFORMED HYETOGRAPH ----

TIME hrs	RAIN mm/hr	TIME hrs	RAIN mm/hr	TIME hrs	RAIN mm/hr	TIME hrs	RAIN mm/hr
0.083	15.00	3.333	3.00	6.583	43.00	9.83	13.00
0.167	15.00	3.417	3.00	6.667	43.00	9.92	13.00
0.250	15.00	3.500	3.00	6.750	43.00	10.00	13.00
0.333	15.00	3.583	3.00	6.833	43.00	10.08	13.00
0.417	15.00	3.667	3.00	6.917	43.00	10.17	13.00
0.500	15.00	3.750	3.00	7.000	43.00	10.25	13.00
0.583	15.00	3.833	3.00	7.083	20.00	10.33	13.00
0.667	15.00	3.917	3.00	7.167	20.00	10.42	13.00
0.750	15.00	4.000	3.00	7.250	20.00	10.50	13.00
0.833	15.00	4.083	5.00	7.333	20.00	10.58	13.00
0.917	15.00	4.167	5.00	7.417	20.00	10.67	13.00
1.000	15.00	4.250	5.00	7.500	20.00	10.75	13.00
1.083	20.00	4.333	5.00	7.583	20.00	10.83	13.00
1.167	20.00	4.417	5.00	7.667	20.00	10.92	13.00
1.250	20.00	4.500	5.00	7.750	20.00	11.00	13.00
1.333	20.00	4.583	5.00	7.833	20.00	11.08	8.00
1.417	20.00	4.667	5.00	7.917	20.00	11.17	8.00

1.500	20.00	4.750	5.00	8.000	20.00	11.25	8.00
1.583	20.00	4.833	5.00	8.083	23.00	11.33	8.00
1.667	20.00	4.917	5.00	8.167	23.00	11.42	8.00
1.750	20.00	5.000	5.00	8.250	23.00	11.50	8.00
1.833	20.00	5.083	20.00	8.333	23.00	11.58	8.00
1.917	20.00	5.167	20.00	8.417	23.00	11.67	8.00
2.000	20.00	5.250	20.00	8.500	23.00	11.75	8.00
2.083	10.00	5.333	20.00	8.583	23.00	11.83	8.00
2.167	10.00	5.417	20.00	8.667	23.00	11.92	8.00
2.250	10.00	5.500	20.00	8.750	23.00	12.00	8.00
2.333	10.00	5.583	20.00	8.833	23.00	12.08	0.00
2.417	10.00	5.667	20.00	8.917	23.00	12.17	0.00
2.500	10.00	5.750	20.00	9.000	23.00	12.25	0.00
2.583	10.00	5.833	20.00	9.083	13.00	12.33	0.00
2.667	10.00	5.917	20.00	9.167	13.00	12.42	0.00
2.750	10.00	6.000	20.00	9.250	13.00	12.50	0.00
2.833	10.00	6.083	43.00	9.333	13.00	12.58	0.00
2.917	10.00	6.167	43.00	9.417	13.00	12.67	0.00
3.000	10.00	6.250	43.00	9.500	13.00	12.75	0.00
3.083	3.00	6.333	43.00	9.583	13.00	12.83	0.00
3.167	3.00	6.417	43.00	9.667	13.00	12.92	0.00
3.250	3.00	6.500	43.00	9.750	13.00	13.00	0.00

Max.Eff.Inten.(mm/hr)=	43.00	45.41	
over (min)	5.00	10.00	
Storage Coeff. (min)=	1.79 (ii)	6.60 (ii)	
Unit Hyd. Tpeak (min)=	5.00	10.00	
Unit Hyd. peak (cms)=	0.32	0.14	
			TOTALS
PEAK FLOW (cms)=	0.02	0.00	0.018 (iii)
TIME TO PEAK (hrs)=	6.50	7.00	7.00
RUNOFF VOLUME (mm)=	192.00	177.58	189.80
TOTAL RAINFALL (mm)=	193.00	193.00	193.00
RUNOFF COEFFICIENT =	0.99	0.92	0.98

***** WARNING: STORAGE COEFF. IS SMALLER THAN TIME STEP!

(i) CN PROCEDURE SELECTED FOR PERVIOUS LOSSES:
CN* = 94.0 Ia = Dep. Storage (Above)
(ii) TIME STEP (DT) SHOULD BE SMALLER OR EQUAL
THAN THE STORAGE COEFFICIENT.
(iii) PEAK FLOW DOES NOT INCLUDE BASEFLOW IF ANY.

ADD HYD (16000)				
1 + 2 = 3	AREA (ha)	QPEAK (cms)	TPEAK (hrs)	R.V. (mm)
ID1= 1 (1600):	0.15	0.018	7.00	189.80
+ ID2= 2 (16001):	103.65	6.796	7.08	140.26
ID = 3 (16000):	103.80	6.806	7.08	140.34

NOTE: PEAK FLOWS DO NOT INCLUDE BASEFLOWS IF ANY.

ROUTE CHN(15001)	
IN= 2---> OUT= 1	Routing time step (min)'= 5.00

<------ DATA FOR SECTION (1.1) ------>

Distance	Elevation	Manning	
0.00	0.15	0.0110	
0.01	0.00	0.0110 /0.0110	Main Channel

4.26	0.02	0.0110	Main Channel
8.51	0.00	0.0110 /0.0110	Main Channel
8.52	0.15	0.0110	

<-------------------- TRAVEL TIME TABLE ---------------------->

DEPTH (m)	ELEV (m)	VOLUME (cu.m.)	FLOW RATE (cms)	VELOCITY (m/s)	TRAV.TIME (min)
0.01	0.01	.390E+00	0.0	0.16	3.25
0.02	0.02	.156E+01	0.0	0.25	2.05
0.02	0.02	.347E+01	0.0	0.36	1.46
0.03	0.03	.557E+01	0.1	0.49	1.07
0.04	0.04	.768E+01	0.1	0.60	0.86
0.05	0.05	.978E+01	0.2	0.71	0.73
0.06	0.06	.119E+02	0.3	0.81	0.65
0.06	0.06	.140E+02	0.4	0.90	0.58
0.07	0.07	.161E+02	0.5	0.99	0.53
0.08	0.08	.182E+02	0.6	1.07	0.49
0.09	0.09	.203E+02	0.7	1.15	0.45
0.09	0.09	.224E+02	0.9	1.23	0.42
0.10	0.10	.245E+02	1.0	1.31	0.40
0.11	0.11	.266E+02	1.2	1.38	0.38
0.12	0.12	.287E+02	1.3	1.45	0.36
0.13	0.13	.308E+02	1.5	1.52	0.34
0.13	0.13	.329E+02	1.7	1.59	0.33
0.14	0.14	.350E+02	1.9	1.66	0.31
0.15	0.15	.371E+02	2.0	1.73	0.30

**** WARNING: TRAVEL TIME TABLE EXCEEDED

	AREA (ha)	QPEAK (cms)	TPEAK (hrs)	R.V. (mm)	MAX DEPTH (m)	MAX VEL (m/s)
	<---- hydrograph ---->				<-pipe / channel->	
INFLOW : ID= 2 (16000)	103.80	6.81	7.08	140.34	0.15	1.70
OUTFLOW: ID= 1 (15001)	103.80	6.80	7.08	140.34	0.15	1.70

CALIB STANDHYD (1500) ID= 1 DT= 5.0 min	Area (ha)= 0.11 Total Imp(%)= 85.00 Dir. Conn.(%)= 82.00

		IMPERVIOUS	PERVIOUS (i)
Surface Area	(ha)=	0.09	0.02
Dep. Storage	(mm)=	1.00	1.50
Average Slope	(%)=	1.00	2.00
Length	(m)=	27.08	40.00
Mannings n	=	0.013	0.250

NOTE: RAINFALL WAS TRANSFORMED TO 5.0 MIN. TIME STEP.

---- TRANSFORMED HYETOGRAPH ----

TIME hrs	RAIN mm/hr	TIME hrs	RAIN mm/hr	TIME hrs	RAIN mm/hr	TIME hrs	RAIN mm/hr
0.083	15.00	3.333	3.00	6.583	43.00	9.83	13.00
0.167	15.00	3.417	3.00	6.667	43.00	9.92	13.00
0.250	15.00	3.500	3.00	6.750	43.00	10.00	13.00
0.333	15.00	3.583	3.00	6.833	43.00	10.08	13.00
0.417	15.00	3.667	3.00	6.917	43.00	10.17	13.00
0.500	15.00	3.750	3.00	7.000	43.00	10.25	13.00
0.583	15.00	3.833	3.00	7.083	20.00	10.33	13.00
0.667	15.00	3.917	3.00	7.167	20.00	10.42	13.00
0.750	15.00	4.000	3.00	7.250	20.00	10.50	13.00

0.833	15.00	4.083	5.00	7.333	20.00	10.58	13.00
0.917	15.00	4.167	5.00	7.417	20.00	10.67	13.00
1.000	15.00	4.250	5.00	7.500	20.00	10.75	13.00
1.083	20.00	4.333	5.00	7.583	20.00	10.83	13.00
1.167	20.00	4.417	5.00	7.667	20.00	10.92	13.00
1.250	20.00	4.500	5.00	7.750	20.00	11.00	13.00
1.333	20.00	4.583	5.00	7.833	20.00	11.08	8.00
1.417	20.00	4.667	5.00	7.917	20.00	11.17	8.00
1.500	20.00	4.750	5.00	8.000	20.00	11.25	8.00
1.583	20.00	4.833	5.00	8.083	23.00	11.33	8.00
1.667	20.00	4.917	5.00	8.167	23.00	11.42	8.00
1.750	20.00	5.000	5.00	8.250	23.00	11.50	8.00
1.833	20.00	5.083	20.00	8.333	23.00	11.58	8.00
1.917	20.00	5.167	20.00	8.417	23.00	11.67	8.00
2.000	20.00	5.250	20.00	8.500	23.00	11.75	8.00
2.083	10.00	5.333	20.00	8.583	23.00	11.83	8.00
2.167	10.00	5.417	20.00	8.667	23.00	11.92	8.00
2.250	10.00	5.500	20.00	8.750	23.00	12.00	8.00
2.333	10.00	5.583	20.00	8.833	23.00	12.08	0.00
2.417	10.00	5.667	20.00	8.917	23.00	12.17	0.00
2.500	10.00	5.750	20.00	9.000	23.00	12.25	0.00
2.583	10.00	5.833	20.00	9.083	13.00	12.33	0.00
2.667	10.00	5.917	20.00	9.167	13.00	12.42	0.00
2.750	10.00	6.000	20.00	9.250	13.00	12.50	0.00
2.833	10.00	6.083	43.00	9.333	13.00	12.58	0.00
2.917	10.00	6.167	43.00	9.417	13.00	12.67	0.00
3.000	10.00	6.250	43.00	9.500	13.00	12.75	0.00
3.083	3.00	6.333	43.00	9.583	13.00	12.83	0.00
3.167	3.00	6.417	43.00	9.667	13.00	12.92	0.00
3.250	3.00	6.500	43.00	9.750	13.00	13.00	0.00

Max.Eff.Inten.(mm/hr)=	43.00	50.99	
over (min)	5.00	15.00	
Storage Coeff. (min)=	1.64 (ii)	10.87 (ii)	
Unit Hyd. Tpeak (min)=	5.00	15.00	
Unit Hyd. peak (cms)=	0.32	0.09	
			TOTALS
PEAK FLOW (cms)=	0.01	0.00	0.013 (iii)
TIME TO PEAK (hrs)=	6.42	7.00	7.00
RUNOFF VOLUME (mm)=	192.00	179.13	189.62
TOTAL RAINFALL (mm)=	193.00	193.00	193.00
RUNOFF COEFFICIENT =	0.99	0.93	0.98

***** WARNING: STORAGE COEFF. IS SMALLER THAN TIME STEP!

(i) CN PROCEDURE SELECTED FOR PERVIOUS LOSSES:
CN* = 94.0 Ia = Dep. Storage (Above)
(ii) TIME STEP (DT) SHOULD BE SMALLER OR EQUAL
THAN THE STORAGE COEFFICIENT.
(iii) PEAK FLOW DOES NOT INCLUDE BASEFLOW IF ANY.

ADD HYD (15000)				
1 + 2 = 3	AREA (ha)	QPEAK (cms)	TPEAK (hrs)	R.V. (mm)
ID1= 1 (1500):	0.11	0.013	7.00	189.62
+ ID2= 2 (15001):	103.80	6.804	7.08	140.34
ID = 3 (15000):	103.91	6.812	7.08	140.39

NOTE: PEAK FLOWS DO NOT INCLUDE BASEFLOWS IF ANY.

CALIB			
STANDHYD (1501)	Area (ha)= 0.56		
ID= 1 DT= 5.0 min	Total Imp(%)= 70.00	Dir. Conn.(%)= 40.00	

		IMPERVIOUS	PERVIOUS (i)
Surface Area	(ha)=	0.39	0.17
Dep. Storage	(mm)=	1.00	1.50
Average Slope	(%)=	1.00	2.00
Length	(m)=	61.10	40.00
Mannings n	=	0.013	0.250

NOTE: RAINFALL WAS TRANSFORMED TO 5.0 MIN. TIME STEP.

---- TRANSFORMED HYETOGRAPH ----

TIME hrs	RAIN mm/hr	TIME hrs	RAIN mm/hr	TIME hrs	RAIN mm/hr	TIME hrs	RAIN mm/hr
0.083	15.00	3.333	3.00	6.583	43.00	9.83	13.00
0.167	15.00	3.417	3.00	6.667	43.00	9.92	13.00
0.250	15.00	3.500	3.00	6.750	43.00	10.00	13.00
0.333	15.00	3.583	3.00	6.833	43.00	10.08	13.00
0.417	15.00	3.667	3.00	6.917	43.00	10.17	13.00
0.500	15.00	3.750	3.00	7.000	43.00	10.25	13.00
0.583	15.00	3.833	3.00	7.083	20.00	10.33	13.00
0.667	15.00	3.917	3.00	7.167	20.00	10.42	13.00
0.750	15.00	4.000	3.00	7.250	20.00	10.50	13.00
0.833	15.00	4.083	5.00	7.333	20.00	10.58	13.00
0.917	15.00	4.167	5.00	7.417	20.00	10.67	13.00
1.000	15.00	4.250	5.00	7.500	20.00	10.75	13.00
1.083	20.00	4.333	5.00	7.583	20.00	10.83	13.00
1.167	20.00	4.417	5.00	7.667	20.00	10.92	13.00
1.250	20.00	4.500	5.00	7.750	20.00	11.00	13.00
1.333	20.00	4.583	5.00	7.833	20.00	11.08	8.00
1.417	20.00	4.667	5.00	7.917	20.00	11.17	8.00
1.500	20.00	4.750	5.00	8.000	20.00	11.25	8.00
1.583	20.00	4.833	5.00	8.083	23.00	11.33	8.00
1.667	20.00	4.917	5.00	8.167	23.00	11.42	8.00
1.750	20.00	5.000	5.00	8.250	23.00	11.50	8.00
1.833	20.00	5.083	20.00	8.333	23.00	11.58	8.00
1.917	20.00	5.167	20.00	8.417	23.00	11.67	8.00
2.000	20.00	5.250	20.00	8.500	23.00	11.75	8.00
2.083	10.00	5.333	20.00	8.583	23.00	11.83	8.00
2.167	10.00	5.417	20.00	8.667	23.00	11.92	8.00
2.250	10.00	5.500	20.00	8.750	23.00	12.00	8.00
2.333	10.00	5.583	20.00	8.833	23.00	12.08	0.00
2.417	10.00	5.667	20.00	8.917	23.00	12.17	0.00
2.500	10.00	5.750	20.00	9.000	23.00	12.25	0.00
2.583	10.00	5.833	20.00	9.083	13.00	12.33	0.00
2.667	10.00	5.917	20.00	9.167	13.00	12.42	0.00
2.750	10.00	6.000	20.00	9.250	13.00	12.50	0.00
2.833	10.00	6.083	43.00	9.333	13.00	12.58	0.00
2.917	10.00	6.167	43.00	9.417	13.00	12.67	0.00
3.000	10.00	6.250	43.00	9.500	13.00	12.75	0.00
3.083	3.00	6.333	43.00	9.583	13.00	12.83	0.00
3.167	3.00	6.417	43.00	9.667	13.00	12.92	0.00
3.250	3.00	6.500	43.00	9.750	13.00	13.00	0.00

Max.Eff.Inten.(mm/hr)=		43.00	82.56
over (min)		5.00	15.00
Storage Coeff. (min)=		2.66 (ii)	10.28 (ii)
Unit Hyd. Tpeak (min)=		5.00	15.00
Unit Hyd. peak (cms)=		0.29	0.09
			TOTALS

```
     PEAK FLOW       (cms)=       0.03         0.04          0.065 (iii)
     TIME TO PEAK    (hrs)=       6.67         7.00           7.00
     RUNOFF VOLUME    (mm)=     192.00       167.90         177.53
     TOTAL RAINFALL   (mm)=     193.00       193.00         193.00
     RUNOFF COEFFICIENT   =       0.99         0.87           0.92

***** WARNING: STORAGE COEFF. IS SMALLER THAN TIME STEP!

       (i) CN PROCEDURE SELECTED FOR PERVIOUS LOSSES:
            CN*  =  82.0    Ia = Dep. Storage  (Above)
      (ii) TIME STEP (DT) SHOULD BE SMALLER OR EQUAL
           THAN THE STORAGE COEFFICIENT.
     (iii) PEAK FLOW DOES NOT INCLUDE BASEFLOW IF ANY.

--------------------------------------------------------------------------------

--------------------
| ADD HYD  (  0005)|
|   1 +  2 =  3    |          AREA    QPEAK    TPEAK     R.V.
--------------------          (ha)    (cms)    (hrs)     (mm)
        ID1= 1 ( 15000):   103.91   6.812     7.08   140.39
      + ID2= 2 (  1501):     0.56   0.065     7.00   177.53
        ==================================================
        ID = 3 (  0005):   104.47   6.863     7.08   140.59

     NOTE:  PEAK FLOWS DO NOT INCLUDE BASEFLOWS IF ANY.
--------------------------------------------------------------------------------
--------------------
| ROUTE CHN( 14001)|
| IN= 2---> OUT= 1 |     Routing time step (min)'=  5.00
--------------------
               <------ DATA FOR SECTION (   1.1) ------>
               Distance      Elevation       Manning
                   0.00          0.15         0.0110
                   0.01          0.00    0.0110 /0.0110  Main Channel
                   4.26          0.02         0.0110      Main Channel
                   8.51          0.00    0.0110 /0.0110  Main Channel
                   8.52          0.15         0.0110

      <---------------------- TRAVEL TIME TABLE ---------------------->
       DEPTH     ELEV       VOLUME     FLOW RATE     VELOCITY   TRAV.TIME
        (m)       (m)      (cu.m.)       (cms)         (m/s)      (min)
       0.01      0.01     .253E+00        0.0          0.16        2.11
       0.02      0.02     .101E+01        0.0          0.25        1.33
       0.02      0.02     .225E+01        0.0          0.36        0.95
       0.03      0.03     .362E+01        0.1          0.49        0.69
       0.04      0.04     .498E+01        0.1          0.60        0.56
       0.05      0.05     .634E+01        0.2          0.71        0.48
       0.06      0.06     .771E+01        0.3          0.81        0.42
       0.06      0.06     .907E+01        0.4          0.90        0.38
       0.07      0.07     .104E+02        0.5          0.99        0.34
       0.08      0.08     .118E+02        0.6          1.07        0.32
       0.09      0.09     .132E+02        0.7          1.15        0.29
       0.09      0.09     .145E+02        0.9          1.23        0.27
       0.10      0.10     .159E+02        1.0          1.31        0.26
       0.11      0.11     .173E+02        1.2          1.38        0.24
       0.12      0.12     .186E+02        1.3          1.45        0.23
       0.13      0.13     .200E+02        1.5          1.52        0.22
       0.13      0.13     .213E+02        1.7          1.59        0.21
       0.14      0.14     .227E+02        1.9          1.66        0.20
       0.15      0.15     .241E+02        2.0          1.73        0.20

     **** WARNING:  TRAVEL TIME TABLE EXCEEDED
                                      <---- hydrograph ---->   <-pipe / channel->
```

	AREA (ha)	QPEAK (cms)	TPEAK (hrs)	R.V. (mm)	MAX DEPTH (m)	MAX VEL (m/s)
INFLOW : ID= 2 (0005)	104.47	6.86	7.08	140.59	0.15	1.70
OUTFLOW: ID= 1 (14001)	104.47	6.86	7.08	140.59	0.15	1.71

CALIB STANDHYD (1400) ID= 1 DT= 5.0 min	Area (ha)= 0.06	Total Imp(%)= 85.00	Dir. Conn.(%)= 85.00

		IMPERVIOUS	PERVIOUS (i)
Surface Area	(ha)=	0.05	0.01
Dep. Storage	(mm)=	1.00	1.50
Average Slope	(%)=	1.00	2.00
Length	(m)=	20.00	40.00
Mannings n	=	0.013	0.250

NOTE: RAINFALL WAS TRANSFORMED TO 5.0 MIN. TIME STEP.

---- TRANSFORMED HYETOGRAPH ----

TIME hrs	RAIN mm/hr	TIME hrs	RAIN mm/hr	TIME hrs	RAIN mm/hr	TIME hrs	RAIN mm/hr
0.083	15.00	3.333	3.00	6.583	43.00	9.83	13.00
0.167	15.00	3.417	3.00	6.667	43.00	9.92	13.00
0.250	15.00	3.500	3.00	6.750	43.00	10.00	13.00
0.333	15.00	3.583	3.00	6.833	43.00	10.08	13.00
0.417	15.00	3.667	3.00	6.917	43.00	10.17	13.00
0.500	15.00	3.750	3.00	7.000	43.00	10.25	13.00
0.583	15.00	3.833	3.00	7.083	20.00	10.33	13.00
0.667	15.00	3.917	3.00	7.167	20.00	10.42	13.00
0.750	15.00	4.000	3.00	7.250	20.00	10.50	13.00
0.833	15.00	4.083	5.00	7.333	20.00	10.58	13.00
0.917	15.00	4.167	5.00	7.417	20.00	10.67	13.00
1.000	15.00	4.250	5.00	7.500	20.00	10.75	13.00
1.083	20.00	4.333	5.00	7.583	20.00	10.83	13.00
1.167	20.00	4.417	5.00	7.667	20.00	10.92	13.00
1.250	20.00	4.500	5.00	7.750	20.00	11.00	13.00
1.333	20.00	4.583	5.00	7.833	20.00	11.08	8.00
1.417	20.00	4.667	5.00	7.917	20.00	11.17	8.00
1.500	20.00	4.750	5.00	8.000	20.00	11.25	8.00
1.583	20.00	4.833	5.00	8.083	23.00	11.33	8.00
1.667	20.00	4.917	5.00	8.167	23.00	11.42	8.00
1.750	20.00	5.000	5.00	8.250	23.00	11.50	8.00
1.833	20.00	5.083	20.00	8.333	23.00	11.58	8.00
1.917	20.00	5.167	20.00	8.417	23.00	11.67	8.00
2.000	20.00	5.250	20.00	8.500	23.00	11.75	8.00
2.083	10.00	5.333	20.00	8.583	23.00	11.83	8.00
2.167	10.00	5.417	20.00	8.667	23.00	11.92	8.00
2.250	10.00	5.500	20.00	8.750	23.00	12.00	8.00
2.333	10.00	5.583	20.00	8.833	23.00	12.08	0.00
2.417	10.00	5.667	20.00	8.917	23.00	12.17	0.00
2.500	10.00	5.750	20.00	9.000	23.00	12.25	0.00
2.583	10.00	5.833	20.00	9.083	13.00	12.33	0.00
2.667	10.00	5.917	20.00	9.167	13.00	12.42	0.00
2.750	10.00	6.000	20.00	9.250	13.00	12.50	0.00
2.833	10.00	6.083	43.00	9.333	13.00	12.58	0.00
2.917	10.00	6.167	43.00	9.417	13.00	12.67	0.00
3.000	10.00	6.250	43.00	9.500	13.00	12.75	0.00
3.083	3.00	6.333	43.00	9.583	13.00	12.83	0.00
3.167	3.00	6.417	43.00	9.667	13.00	12.92	0.00

```
              3.250    3.00 | 6.500   43.00 | 9.750   13.00 | 13.00    0.00

     Max.Eff.Inten.(mm/hr)=      43.00        42.50
               over (min)         5.00        10.00
     Storage Coeff.  (min)=       1.36 (ii)    6.31 (ii)
     Unit Hyd. Tpeak (min)=       5.00        10.00
     Unit Hyd. peak  (cms)=       0.33         0.15
                                                          *TOTALS*
     PEAK FLOW       (cms)=       0.01         0.00          0.007 (iii)
     TIME TO PEAK    (hrs)=       6.33         7.00           7.00
     RUNOFF VOLUME    (mm)=     192.00       179.00         189.99
     TOTAL RAINFALL   (mm)=     193.00       193.00         193.00
     RUNOFF COEFFICIENT   =       0.99         0.93           0.98

***** WARNING: STORAGE COEFF. IS SMALLER THAN TIME STEP!

       (i) CN PROCEDURE SELECTED FOR PERVIOUS LOSSES:
            CN*  =  95.0    Ia = Dep. Storage  (Above)
      (ii) TIME STEP (DT) SHOULD BE SMALLER OR EQUAL
           THAN THE STORAGE COEFFICIENT.
     (iii) PEAK FLOW DOES NOT INCLUDE BASEFLOW IF ANY.

--------------------------------------------------------------------------------


--------------------
| ADD HYD  ( 14000)|
|   1 +  2 =  3    |          AREA    QPEAK    TPEAK     R.V.
--------------------          (ha)    (cms)    (hrs)     (mm)
        ID1= 1 (  1400):     0.06   0.007     7.00   189.99
      + ID2= 2 ( 14001):   104.47   6.863     7.08   140.59
        ================================================
        ID = 3 ( 14000):   104.53   6.866     7.08   140.61

     NOTE:  PEAK FLOWS DO NOT INCLUDE BASEFLOWS IF ANY.
--------------------------------------------------------------------------------
--------------------
| ROUTE CHN( 13001)|
| IN= 2---> OUT= 1 |     Routing time step (min)'=  5.00
--------------------
               <------ DATA FOR SECTION (   1.1) ------>
               Distance      Elevation       Manning
                   0.00          0.15         0.0110
                   0.01          0.00    0.0110 /0.0110  Main Channel
                   4.26          0.02         0.0110      Main Channel
                   8.51          0.00    0.0110 /0.0110  Main Channel
                   8.52          0.15         0.0110

      <---------------------- TRAVEL TIME TABLE ---------------------->
       DEPTH    ELEV      VOLUME    FLOW RATE    VELOCITY   TRAV.TIME
        (m)      (m)     (cu.m.)      (cms)        (m/s)      (min)
       0.01     0.01    .232E+00       0.0          0.16       1.93
       0.02     0.02    .927E+00       0.0          0.25       1.22
       0.02     0.02    .206E+01       0.0          0.36       0.87
       0.03     0.03    .331E+01       0.1          0.49       0.63
       0.04     0.04    .456E+01       0.1          0.60       0.51
       0.05     0.05    .581E+01       0.2          0.71       0.44
       0.06     0.06    .706E+01       0.3          0.81       0.38
       0.06     0.06    .831E+01       0.4          0.90       0.34
       0.07     0.07    .956E+01       0.5          0.99       0.31
       0.08     0.08    .108E+02       0.6          1.07       0.29
       0.09     0.09    .121E+02       0.7          1.15       0.27
       0.09     0.09    .133E+02       0.9          1.23       0.25
       0.10     0.10    .146E+02       1.0          1.31       0.24
       0.11     0.11    .158E+02       1.2          1.38       0.22
```

0.12	0.12	.171E+02	1.3	1.45	0.21
0.13	0.13	.183E+02	1.5	1.52	0.20
0.13	0.13	.196E+02	1.7	1.59	0.19
0.14	0.14	.208E+02	1.9	1.66	0.19
0.15	0.15	.221E+02	2.0	1.73	0.18

**** WARNING: TRAVEL TIME TABLE EXCEEDED

	AREA (ha)	QPEAK (cms)	TPEAK (hrs)	R.V. (mm)	<-pipe / channel-> MAX DEPTH (m)	MAX VEL (m/s)
		<---- hydrograph ---->				
INFLOW : ID= 2 (14000)	104.53	6.87	7.08	140.61	0.15	1.71
OUTFLOW: ID= 1 (13001)	104.53	6.87	7.08	140.61	0.15	1.71

CALIB	STANDHYD (1300)	ID= 1 DT= 5.0 min

Area (ha)= 0.06
Total Imp(%)= 88.00 Dir. Conn.(%)= 88.00

		IMPERVIOUS	PERVIOUS (i)
Surface Area	(ha)=	0.05	0.01
Dep. Storage	(mm)=	1.00	1.50
Average Slope	(%)=	1.00	2.00
Length	(m)=	20.00	40.00
Mannings n	=	0.013	0.250

NOTE: RAINFALL WAS TRANSFORMED TO 5.0 MIN. TIME STEP.

---- TRANSFORMED HYETOGRAPH ----

TIME hrs	RAIN mm/hr	TIME hrs	RAIN mm/hr	TIME hrs	RAIN mm/hr	TIME hrs	RAIN mm/hr
0.083	15.00	3.333	3.00	6.583	43.00	9.83	13.00
0.167	15.00	3.417	3.00	6.667	43.00	9.92	13.00
0.250	15.00	3.500	3.00	6.750	43.00	10.00	13.00
0.333	15.00	3.583	3.00	6.833	43.00	10.08	13.00
0.417	15.00	3.667	3.00	6.917	43.00	10.17	13.00
0.500	15.00	3.750	3.00	7.000	43.00	10.25	13.00
0.583	15.00	3.833	3.00	7.083	20.00	10.33	13.00
0.667	15.00	3.917	3.00	7.167	20.00	10.42	13.00
0.750	15.00	4.000	3.00	7.250	20.00	10.50	13.00
0.833	15.00	4.083	5.00	7.333	20.00	10.58	13.00
0.917	15.00	4.167	5.00	7.417	20.00	10.67	13.00
1.000	15.00	4.250	5.00	7.500	20.00	10.75	13.00
1.083	20.00	4.333	5.00	7.583	20.00	10.83	13.00
1.167	20.00	4.417	5.00	7.667	20.00	10.92	13.00
1.250	20.00	4.500	5.00	7.750	20.00	11.00	13.00
1.333	20.00	4.583	5.00	7.833	20.00	11.08	8.00
1.417	20.00	4.667	5.00	7.917	20.00	11.17	8.00
1.500	20.00	4.750	5.00	8.000	20.00	11.25	8.00
1.583	20.00	4.833	5.00	8.083	23.00	11.33	8.00
1.667	20.00	4.917	5.00	8.167	23.00	11.42	8.00
1.750	20.00	5.000	5.00	8.250	23.00	11.50	8.00
1.833	20.00	5.083	20.00	8.333	23.00	11.58	8.00
1.917	20.00	5.167	20.00	8.417	23.00	11.67	8.00
2.000	20.00	5.250	20.00	8.500	23.00	11.75	8.00
2.083	10.00	5.333	20.00	8.583	23.00	11.83	8.00
2.167	10.00	5.417	20.00	8.667	23.00	11.92	8.00
2.250	10.00	5.500	20.00	8.750	23.00	12.00	8.00
2.333	10.00	5.583	20.00	8.833	23.00	12.08	0.00
2.417	10.00	5.667	20.00	8.917	23.00	12.17	0.00
2.500	10.00	5.750	20.00	9.000	23.00	12.25	0.00

2.583	10.00	5.833	20.00	9.083	13.00	12.33	0.00
2.667	10.00	5.917	20.00	9.167	13.00	12.42	0.00
2.750	10.00	6.000	20.00	9.250	13.00	12.50	0.00
2.833	10.00	6.083	43.00	9.333	13.00	12.58	0.00
2.917	10.00	6.167	43.00	9.417	13.00	12.67	0.00
3.000	10.00	6.250	43.00	9.500	13.00	12.75	0.00
3.083	3.00	6.333	43.00	9.583	13.00	12.83	0.00
3.167	3.00	6.417	43.00	9.667	13.00	12.92	0.00
3.250	3.00	6.500	43.00	9.750	13.00	13.00	0.00

Max.Eff.Inten.(mm/hr)=	43.00	42.50	
over (min)	5.00	10.00	
Storage Coeff. (min)=	1.36 (ii)	5.82 (ii)	
Unit Hyd. Tpeak (min)=	5.00	10.00	
Unit Hyd. peak (cms)=	0.33	0.15	
			TOTALS
PEAK FLOW (cms)=	0.01	0.00	0.007 (iii)
TIME TO PEAK (hrs)=	6.33	7.00	7.00
RUNOFF VOLUME (mm)=	192.00	179.00	190.39
TOTAL RAINFALL (mm)=	193.00	193.00	193.00
RUNOFF COEFFICIENT =	0.99	0.93	0.99

***** WARNING: STORAGE COEFF. IS SMALLER THAN TIME STEP!

(i) CN PROCEDURE SELECTED FOR PERVIOUS LOSSES:
CN* = 95.0 Ia = Dep. Storage (Above)
(ii) TIME STEP (DT) SHOULD BE SMALLER OR EQUAL
THAN THE STORAGE COEFFICIENT.
(iii) PEAK FLOW DOES NOT INCLUDE BASEFLOW IF ANY.

ADD HYD (13000)		AREA	QPEAK	TPEAK	R.V.
1 + 2 = 3		(ha)	(cms)	(hrs)	(mm)
	ID1= 1 (1300):	0.06	0.007	7.00	190.39
	+ ID2= 2 (13001):	104.53	6.866	7.08	140.61
	ID = 3 (13000):	104.59	6.870	7.08	140.64

NOTE: PEAK FLOWS DO NOT INCLUDE BASEFLOWS IF ANY.

CALIB		
STANDHYD (1201)	Area (ha)=	0.32
ID= 1 DT= 5.0 min	Total Imp(%)=	81.00 Dir. Conn.(%)= 78.00

		IMPERVIOUS	PERVIOUS (i)
Surface Area	(ha)=	0.26	0.06
Dep. Storage	(mm)=	1.00	1.50
Average Slope	(%)=	1.00	2.00
Length	(m)=	46.19	40.00
Mannings n	=	0.013	0.250

NOTE: RAINFALL WAS TRANSFORMED TO 5.0 MIN. TIME STEP.

---- TRANSFORMED HYETOGRAPH ----

TIME hrs	RAIN mm/hr	TIME hrs	RAIN mm/hr	TIME hrs	RAIN mm/hr	TIME hrs	RAIN mm/hr
0.083	15.00	3.333	3.00	6.583	43.00	9.83	13.00
0.167	15.00	3.417	3.00	6.667	43.00	9.92	13.00
0.250	15.00	3.500	3.00	6.750	43.00	10.00	13.00

0.333	15.00	3.583	3.00	6.833	43.00	10.08	13.00
0.417	15.00	3.667	3.00	6.917	43.00	10.17	13.00
0.500	15.00	3.750	3.00	7.000	43.00	10.25	13.00
0.583	15.00	3.833	3.00	7.083	20.00	10.33	13.00
0.667	15.00	3.917	3.00	7.167	20.00	10.42	13.00
0.750	15.00	4.000	3.00	7.250	20.00	10.50	13.00
0.833	15.00	4.083	5.00	7.333	20.00	10.58	13.00
0.917	15.00	4.167	5.00	7.417	20.00	10.67	13.00
1.000	15.00	4.250	5.00	7.500	20.00	10.75	13.00
1.083	20.00	4.333	5.00	7.583	20.00	10.83	13.00
1.167	20.00	4.417	5.00	7.667	20.00	10.92	13.00
1.250	20.00	4.500	5.00	7.750	20.00	11.00	13.00
1.333	20.00	4.583	5.00	7.833	20.00	11.08	8.00
1.417	20.00	4.667	5.00	7.917	20.00	11.17	8.00
1.500	20.00	4.750	5.00	8.000	20.00	11.25	8.00
1.583	20.00	4.833	5.00	8.083	23.00	11.33	8.00
1.667	20.00	4.917	5.00	8.167	23.00	11.42	8.00
1.750	20.00	5.000	5.00	8.250	23.00	11.50	8.00
1.833	20.00	5.083	20.00	8.333	23.00	11.58	8.00
1.917	20.00	5.167	20.00	8.417	23.00	11.67	8.00
2.000	20.00	5.250	20.00	8.500	23.00	11.75	8.00
2.083	10.00	5.333	20.00	8.583	23.00	11.83	8.00
2.167	10.00	5.417	20.00	8.667	23.00	11.92	8.00
2.250	10.00	5.500	20.00	8.750	23.00	12.00	8.00
2.333	10.00	5.583	20.00	8.833	23.00	12.08	0.00
2.417	10.00	5.667	20.00	8.917	23.00	12.17	0.00
2.500	10.00	5.750	20.00	9.000	23.00	12.25	0.00
2.583	10.00	5.833	20.00	9.083	13.00	12.33	0.00
2.667	10.00	5.917	20.00	9.167	13.00	12.42	0.00
2.750	10.00	6.000	20.00	9.250	13.00	12.50	0.00
2.833	10.00	6.083	43.00	9.333	13.00	12.58	0.00
2.917	10.00	6.167	43.00	9.417	13.00	12.67	0.00
3.000	10.00	6.250	43.00	9.500	13.00	12.75	0.00
3.083	3.00	6.333	43.00	9.583	13.00	12.83	0.00
3.167	3.00	6.417	43.00	9.667	13.00	12.92	0.00
3.250	3.00	6.500	43.00	9.750	13.00	13.00	0.00

Max.Eff.Inten.(mm/hr)=	43.00	47.87	
over (min)	5.00	15.00	
Storage Coeff. (min)=	2.25 (ii)	11.73 (ii)	
Unit Hyd. Tpeak (min)=	5.00	15.00	
Unit Hyd. peak (cms)=	0.30	0.09	
			TOTALS
PEAK FLOW (cms)=	0.03	0.01	0.038 (iii)
TIME TO PEAK (hrs)=	6.58	7.00	7.00
RUNOFF VOLUME (mm)=	192.00	167.95	186.69
TOTAL RAINFALL (mm)=	193.00	193.00	193.00
RUNOFF COEFFICIENT =	0.99	0.87	0.97

***** WARNING: STORAGE COEFF. IS SMALLER THAN TIME STEP!

(i) CN PROCEDURE SELECTED FOR PERVIOUS LOSSES:
CN* = 89.0 Ia = Dep. Storage (Above)
(ii) TIME STEP (DT) SHOULD BE SMALLER OR EQUAL
THAN THE STORAGE COEFFICIENT.
(iii) PEAK FLOW DOES NOT INCLUDE BASEFLOW IF ANY.

ADD HYD (0004)				
1 + 2 = 3	AREA (ha)	QPEAK (cms)	TPEAK (hrs)	R.V. (mm)
ID1= 1 (1201):	0.32	0.038	7.00	186.69

```
     + ID2= 2 ( 13000):   104.59   6.870     7.08   140.64
       ==================================================
       ID = 3 (  0004):   104.91   6.893     7.08   140.78

     NOTE:  PEAK FLOWS DO NOT INCLUDE BASEFLOWS IF ANY.
--------------------------------------------------------------------------------
--------------------
| ROUTE CHN( 12001)|
| IN= 2---> OUT= 1 |     Routing time step (min)'=  5.00
--------------------
               <------ DATA FOR SECTION (   1.1) ------>
               Distance      Elevation       Manning
                   0.00          0.15         0.0110
                   0.01          0.00    0.0110 /0.0110  Main Channel
                   4.26          0.02         0.0110      Main Channel
                   8.51          0.00    0.0110 /0.0110  Main Channel
                   8.52          0.15         0.0110

      <---------------------- TRAVEL TIME TABLE ---------------------->
       DEPTH    ELEV      VOLUME    FLOW RATE    VELOCITY   TRAV.TIME
        (m)      (m)     (cu.m.)      (cms)        (m/s)      (min)
       0.01     0.01    .939E+00       0.0          0.16       7.82
       0.02     0.02    .375E+01       0.0          0.25       4.92
       0.02     0.02    .836E+01       0.0          0.36       3.52
       0.03     0.03    .134E+02       0.1          0.49       2.57
       0.04     0.04    .185E+02       0.1          0.60       2.08
       0.05     0.05    .235E+02       0.2          0.71       1.77
       0.06     0.06    .286E+02       0.3          0.81       1.55
       0.06     0.06    .336E+02       0.4          0.90       1.39
       0.07     0.07    .387E+02       0.5          0.99       1.27
       0.08     0.08    .438E+02       0.6          1.07       1.17
       0.09     0.09    .488E+02       0.7          1.15       1.09
       0.09     0.09    .539E+02       0.9          1.23       1.02
       0.10     0.10    .589E+02       1.0          1.31       0.96
       0.11     0.11    .640E+02       1.2          1.38       0.91
       0.12     0.12    .691E+02       1.3          1.45       0.86
       0.13     0.13    .741E+02       1.5          1.52       0.82
       0.13     0.13    .792E+02       1.7          1.59       0.79
       0.14     0.14    .843E+02       1.9          1.66       0.76
       0.15     0.15    .893E+02       2.0          1.73       0.73

     **** WARNING:  TRAVEL TIME TABLE EXCEEDED
                                  <---- hydrograph ---->   <-pipe / channel->
                                AREA    QPEAK   TPEAK   R.V.   MAX DEPTH  MAX VEL
                                (ha)    (cms)   (hrs)   (mm)      (m)      (m/s)
    INFLOW : ID= 2 (  0004)  104.91     6.89    7.08 140.78      0.15      1.71
    OUTFLOW: ID= 1 ( 12001)  104.91     6.89    7.08 140.78      0.15      1.72



--------------------------------------------------------------------------------
--------------------
| CALIB             |
| STANDHYD (  1200)|   Area    (ha)=   0.24
|ID= 1 DT= 5.0 min |   Total Imp(%)=  88.00   Dir. Conn.(%)=  39.00
--------------------
                            IMPERVIOUS    PERVIOUS (i)
     Surface Area     (ha)=       0.21         0.03
     Dep. Storage     (mm)=       1.00         1.50
     Average Slope     (%)=       1.00         2.00
     Length            (m)=      40.00        40.00
     Mannings n             =     0.013        0.250

         NOTE:  RAINFALL WAS TRANSFORMED TO   5.0 MIN. TIME STEP.
```

---- TRANSFORMED HYETOGRAPH ----

TIME hrs	RAIN mm/hr	TIME hrs	RAIN mm/hr	TIME hrs	RAIN mm/hr	TIME hrs	RAIN mm/hr
0.083	15.00	3.333	3.00	6.583	43.00	9.83	13.00
0.167	15.00	3.417	3.00	6.667	43.00	9.92	13.00
0.250	15.00	3.500	3.00	6.750	43.00	10.00	13.00
0.333	15.00	3.583	3.00	6.833	43.00	10.08	13.00
0.417	15.00	3.667	3.00	6.917	43.00	10.17	13.00
0.500	15.00	3.750	3.00	7.000	43.00	10.25	13.00
0.583	15.00	3.833	3.00	7.083	20.00	10.33	13.00
0.667	15.00	3.917	3.00	7.167	20.00	10.42	13.00
0.750	15.00	4.000	3.00	7.250	20.00	10.50	13.00
0.833	15.00	4.083	5.00	7.333	20.00	10.58	13.00
0.917	15.00	4.167	5.00	7.417	20.00	10.67	13.00
1.000	15.00	4.250	5.00	7.500	20.00	10.75	13.00
1.083	20.00	4.333	5.00	7.583	20.00	10.83	13.00
1.167	20.00	4.417	5.00	7.667	20.00	10.92	13.00
1.250	20.00	4.500	5.00	7.750	20.00	11.00	13.00
1.333	20.00	4.583	5.00	7.833	20.00	11.08	8.00
1.417	20.00	4.667	5.00	7.917	20.00	11.17	8.00
1.500	20.00	4.750	5.00	8.000	20.00	11.25	8.00
1.583	20.00	4.833	5.00	8.083	23.00	11.33	8.00
1.667	20.00	4.917	5.00	8.167	23.00	11.42	8.00
1.750	20.00	5.000	5.00	8.250	23.00	11.50	8.00
1.833	20.00	5.083	20.00	8.333	23.00	11.58	8.00
1.917	20.00	5.167	20.00	8.417	23.00	11.67	8.00
2.000	20.00	5.250	20.00	8.500	23.00	11.75	8.00
2.083	10.00	5.333	20.00	8.583	23.00	11.83	8.00
2.167	10.00	5.417	20.00	8.667	23.00	11.92	8.00
2.250	10.00	5.500	20.00	8.750	23.00	12.00	8.00
2.333	10.00	5.583	20.00	8.833	23.00	12.08	0.00
2.417	10.00	5.667	20.00	8.917	23.00	12.17	0.00
2.500	10.00	5.750	20.00	9.000	23.00	12.25	0.00
2.583	10.00	5.833	20.00	9.083	13.00	12.33	0.00
2.667	10.00	5.917	20.00	9.167	13.00	12.42	0.00
2.750	10.00	6.000	20.00	9.250	13.00	12.50	0.00
2.833	10.00	6.083	43.00	9.333	13.00	12.58	0.00
2.917	10.00	6.167	43.00	9.417	13.00	12.67	0.00
3.000	10.00	6.250	43.00	9.500	13.00	12.75	0.00
3.083	3.00	6.333	43.00	9.583	13.00	12.83	0.00
3.167	3.00	6.417	43.00	9.667	13.00	12.92	0.00
3.250	3.00	6.500	43.00	9.750	13.00	13.00	0.00

Max.Eff.Inten.(mm/hr)=	43.00	218.47	
over (min)	5.00	10.00	
Storage Coeff. (min)=	2.07 (ii)	7.23 (ii)	
Unit Hyd. Tpeak (min)=	5.00	10.00	
Unit Hyd. peak (cms)=	0.31	0.14	
			TOTALS
PEAK FLOW (cms)=	0.01	0.02	0.029 (iii)
TIME TO PEAK (hrs)=	6.50	7.00	7.00
RUNOFF VOLUME (mm)=	192.00	190.11	190.83
TOTAL RAINFALL (mm)=	193.00	193.00	193.00
RUNOFF COEFFICIENT =	0.99	0.99	0.99

***** WARNING: STORAGE COEFF. IS SMALLER THAN TIME STEP!

(i) CN PROCEDURE SELECTED FOR PERVIOUS LOSSES:
CN* = 95.0 Ia = Dep. Storage (Above)

(ii) TIME STEP (DT) SHOULD BE SMALLER OR EQUAL
THAN THE STORAGE COEFFICIENT.

(iii) PEAK FLOW DOES NOT INCLUDE BASEFLOW IF ANY.

```
--------------------
| ADD HYD  ( 12000)|
|   1 +  2 =  3    |          AREA    QPEAK    TPEAK     R.V.
--------------------          (ha)    (cms)    (hrs)     (mm)
        ID1= 1 (  1200):     0.24   0.029     7.00   190.83
      + ID2= 2 ( 12001):   104.91   6.886     7.08   140.78
        ==================================================
        ID = 3 ( 12000):   105.15   6.907     7.08   140.90

     NOTE:  PEAK FLOWS DO NOT INCLUDE BASEFLOWS IF ANY.
--------------------------------------------------------------------------------
--------------------
| CALIB            |
| STANDHYD (  1101)|   Area    (ha)=   0.19
|ID= 1 DT= 5.0 min |   Total Imp(%)=  84.00   Dir. Conn.(%)=  83.00
--------------------
                           IMPERVIOUS    PERVIOUS (i)
     Surface Area     (ha)=       0.16         0.03
     Dep. Storage     (mm)=       1.00         1.50
     Average Slope     (%)=       1.00         2.00
     Length            (m)=      35.59        40.00
     Mannings n             =     0.013        0.250

         NOTE:  RAINFALL WAS TRANSFORMED TO   5.0 MIN. TIME STEP.

                        ---- TRANSFORMED HYETOGRAPH ----
  TIME     RAIN |  TIME     RAIN |'  TIME     RAIN |  TIME     RAIN
   hrs    mm/hr |   hrs    mm/hr |'   hrs    mm/hr |   hrs    mm/hr
 0.083    15.00 | 3.333     3.00 | 6.583    43.00 |  9.83    13.00
 0.167    15.00 | 3.417     3.00 | 6.667    43.00 |  9.92    13.00
 0.250    15.00 | 3.500     3.00 | 6.750    43.00 | 10.00    13.00
 0.333    15.00 | 3.583     3.00 | 6.833    43.00 | 10.08    13.00
 0.417    15.00 | 3.667     3.00 | 6.917    43.00 | 10.17    13.00
 0.500    15.00 | 3.750     3.00 | 7.000    43.00 | 10.25    13.00
 0.583    15.00 | 3.833     3.00 | 7.083    20.00 | 10.33    13.00
 0.667    15.00 | 3.917     3.00 | 7.167    20.00 | 10.42    13.00
 0.750    15.00 | 4.000     3.00 | 7.250    20.00 | 10.50    13.00
 0.833    15.00 | 4.083     5.00 | 7.333    20.00 | 10.58    13.00
 0.917    15.00 | 4.167     5.00 | 7.417    20.00 | 10.67    13.00
 1.000    15.00 | 4.250     5.00 | 7.500    20.00 | 10.75    13.00
 1.083    20.00 | 4.333     5.00 | 7.583    20.00 | 10.83    13.00
 1.167    20.00 | 4.417     5.00 | 7.667    20.00 | 10.92    13.00
 1.250    20.00 | 4.500     5.00 | 7.750    20.00 | 11.00    13.00
 1.333    20.00 | 4.583     5.00 | 7.833    20.00 | 11.08     8.00
 1.417    20.00 | 4.667     5.00 | 7.917    20.00 | 11.17     8.00
 1.500    20.00 | 4.750     5.00 | 8.000    20.00 | 11.25     8.00
 1.583    20.00 | 4.833     5.00 | 8.083    23.00 | 11.33     8.00
 1.667    20.00 | 4.917     5.00 | 8.167    23.00 | 11.42     8.00
 1.750    20.00 | 5.000     5.00 | 8.250    23.00 | 11.50     8.00
 1.833    20.00 | 5.083    20.00 | 8.333    23.00 | 11.58     8.00
 1.917    20.00 | 5.167    20.00 | 8.417    23.00 | 11.67     8.00
 2.000    20.00 | 5.250    20.00 | 8.500    23.00 | 11.75     8.00
 2.083    10.00 | 5.333    20.00 | 8.583    23.00 | 11.83     8.00
 2.167    10.00 | 5.417    20.00 | 8.667    23.00 | 11.92     8.00
 2.250    10.00 | 5.500    20.00 | 8.750    23.00 | 12.00     8.00
 2.333    10.00 | 5.583    20.00 | 8.833    23.00 | 12.08     0.00
 2.417    10.00 | 5.667    20.00 | 8.917    23.00 | 12.17     0.00
 2.500    10.00 | 5.750    20.00 | 9.000    23.00 | 12.25     0.00
 2.583    10.00 | 5.833    20.00 | 9.083    13.00 | 12.33     0.00
 2.667    10.00 | 5.917    20.00 | 9.167    13.00 | 12.42     0.00
```

2.750	10.00	6.000	20.00	9.250	13.00	12.50	0.00
2.833	10.00	6.083	43.00	9.333	13.00	12.58	0.00
2.917	10.00	6.167	43.00	9.417	13.00	12.67	0.00
3.000	10.00	6.250	43.00	9.500	13.00	12.75	0.00
3.083	3.00	6.333	43.00	9.583	13.00	12.83	0.00
3.167	3.00	6.417	43.00	9.667	13.00	12.92	0.00
3.250	3.00	6.500	43.00	9.750	13.00	13.00	0.00

Max.Eff.Inten.(mm/hr)=	43.00	44.55	
over (min)	5.00	15.00	
Storage Coeff. (min)=	1.93 (ii)	11.68 (ii)	
Unit Hyd. Tpeak (min)=	5.00	15.00	
Unit Hyd. peak (cms)=	0.31	0.09	
			TOTALS
PEAK FLOW (cms)=	0.02	0.00	0.023 (iii)
TIME TO PEAK (hrs)=	6.50	7.00	7.00
RUNOFF VOLUME (mm)=	192.00	172.83	188.70
TOTAL RAINFALL (mm)=	193.00	193.00	193.00
RUNOFF COEFFICIENT =	0.99	0.90	0.98

***** WARNING: STORAGE COEFF. IS SMALLER THAN TIME STEP!

(i) CN PROCEDURE SELECTED FOR PERVIOUS LOSSES:
CN* = 92.0 Ia = Dep. Storage (Above)
(ii) TIME STEP (DT) SHOULD BE SMALLER OR EQUAL
THAN THE STORAGE COEFFICIENT.
(iii) PEAK FLOW DOES NOT INCLUDE BASEFLOW IF ANY.

ADD HYD (0003)		AREA	QPEAK	TPEAK	R.V.
		(ha)	(cms)	(hrs)	(mm)
ID1= 1 (1101):		0.19	0.023	7.00	188.70
+ ID2= 2 (12000):		105.15	6.907	7.08	140.90
ID = 3 (0003):		105.34	6.920	7.08	140.98

NOTE: PEAK FLOWS DO NOT INCLUDE BASEFLOWS IF ANY.

ROUTE CHN(11001)	IN= 2---> OUT= 1	Routing time step (min)'= 5.00

<------ DATA FOR SECTION (1.1) ------>

Distance	Elevation	Manning	
0.00	0.15	0.0110	
0.01	0.00	0.0110 /0.0110	Main Channel
4.26	0.02	0.0110	Main Channel
8.51	0.00	0.0110 /0.0110	Main Channel
8.52	0.15	0.0110	

<---------- TRAVEL TIME TABLE ---------->

DEPTH (m)	ELEV (m)	VOLUME (cu.m.)	FLOW RATE (cms)	VELOCITY (m/s)	TRAV.TIME (min)
0.01	0.01	.217E+00	0.0	0.16	1.81
0.02	0.02	.868E+00	0.0	0.25	1.14
0.02	0.02	.193E+01	0.0	0.36	0.81
0.03	0.03	.310E+01	0.1	0.49	0.59
0.04	0.04	.427E+01	0.1	0.60	0.48
0.05	0.05	.543E+01	0.2	0.71	0.41
0.06	0.06	.661E+01	0.3	0.81	0.36
0.06	0.06	.777E+01	0.4	0.90	0.32

0.07	0.07	.894E+01	0.5	0.99	0.29
0.08	0.08	.101E+02	0.6	1.07	0.27
0.09	0.09	.113E+02	0.7	1.15	0.25
0.09	0.09	.125E+02	0.9	1.23	0.24
0.10	0.10	.136E+02	1.0	1.31	0.22
0.11	0.11	.148E+02	1.2	1.38	0.21
0.12	0.12	.160E+02	1.3	1.45	0.20
0.13	0.13	.171E+02	1.5	1.52	0.19
0.13	0.13	.183E+02	1.7	1.59	0.18
0.14	0.14	.195E+02	1.9	1.66	0.17
0.15	0.15	.206E+02	2.0	1.73	0.17

**** WARNING: TRAVEL TIME TABLE EXCEEDED

	<---- hydrograph ---->				<-pipe / channel->	
	AREA (ha)	QPEAK (cms)	TPEAK (hrs)	R.V. (mm)	MAX DEPTH (m)	MAX VEL (m/s)
INFLOW : ID= 2 (0003)	105.34	6.92	7.08	140.98	0.15	1.72
OUTFLOW: ID= 1 (11001)	105.34	6.92	7.08	140.98	0.15	1.72

CALIB STANDHYD (1100) ID= 1 DT= 5.0 min	Area (ha)= 0.05 Total Imp(%)= 88.00 Dir. Conn.(%)= 88.00

		IMPERVIOUS	PERVIOUS (i)
Surface Area	(ha)=	0.04	0.01
Dep. Storage	(mm)=	1.00	1.50
Average Slope	(%)=	1.00	2.00
Length	(m)=	18.26	40.00
Mannings n	=	0.013	0.250

NOTE: RAINFALL WAS TRANSFORMED TO 5.0 MIN. TIME STEP.

---- TRANSFORMED HYETOGRAPH ----

TIME hrs	RAIN mm/hr	TIME hrs	RAIN mm/hr	TIME hrs	RAIN mm/hr	TIME hrs	RAIN mm/hr
0.083	15.00	3.333	3.00	6.583	43.00	9.83	13.00
0.167	15.00	3.417	3.00	6.667	43.00	9.92	13.00
0.250	15.00	3.500	3.00	6.750	43.00	10.00	13.00
0.333	15.00	3.583	3.00	6.833	43.00	10.08	13.00
0.417	15.00	3.667	3.00	6.917	43.00	10.17	13.00
0.500	15.00	3.750	3.00	7.000	43.00	10.25	13.00
0.583	15.00	3.833	3.00	7.083	20.00	10.33	13.00
0.667	15.00	3.917	3.00	7.167	20.00	10.42	13.00
0.750	15.00	4.000	3.00	7.250	20.00	10.50	13.00
0.833	15.00	4.083	5.00	7.333	20.00	10.58	13.00
0.917	15.00	4.167	5.00	7.417	20.00	10.67	13.00
1.000	15.00	4.250	5.00	7.500	20.00	10.75	13.00
1.083	20.00	4.333	5.00	7.583	20.00	10.83	13.00
1.167	20.00	4.417	5.00	7.667	20.00	10.92	13.00
1.250	20.00	4.500	5.00	7.750	20.00	11.00	13.00
1.333	20.00	4.583	5.00	7.833	20.00	11.08	8.00
1.417	20.00	4.667	5.00	7.917	20.00	11.17	8.00
1.500	20.00	4.750	5.00	8.000	20.00	11.25	8.00
1.583	20.00	4.833	5.00	8.083	23.00	11.33	8.00
1.667	20.00	4.917	5.00	8.167	23.00	11.42	8.00
1.750	20.00	5.000	5.00	8.250	23.00	11.50	8.00
1.833	20.00	5.083	20.00	8.333	23.00	11.58	8.00
1.917	20.00	5.167	20.00	8.417	23.00	11.67	8.00
2.000	20.00	5.250	20.00	8.500	23.00	11.75	8.00

2.083	10.00	5.333	20.00	8.583	23.00	11.83	8.00
2.167	10.00	5.417	20.00	8.667	23.00	11.92	8.00
2.250	10.00	5.500	20.00	8.750	23.00	12.00	8.00
2.333	10.00	5.583	20.00	8.833	23.00	12.08	0.00
2.417	10.00	5.667	20.00	8.917	23.00	12.17	0.00
2.500	10.00	5.750	20.00	9.000	23.00	12.25	0.00
2.583	10.00	5.833	20.00	9.083	13.00	12.33	0.00
2.667	10.00	5.917	20.00	9.167	13.00	12.42	0.00
2.750	10.00	6.000	20.00	9.250	13.00	12.50	0.00
2.833	10.00	6.083	43.00	9.333	13.00	12.58	0.00
2.917	10.00	6.167	43.00	9.417	13.00	12.67	0.00
3.000	10.00	6.250	43.00	9.500	13.00	12.75	0.00
3.083	3.00	6.333	43.00	9.583	13.00	12.83	0.00
3.167	3.00	6.417	43.00	9.667	13.00	12.92	0.00
3.250	3.00	6.500	43.00	9.750	13.00	13.00	0.00

Max.Eff.Inten.(mm/hr)=	43.00	42.50	
over (min)	5.00	10.00	
Storage Coeff. (min)=	1.29 (ii)	5.75 (ii)	
Unit Hyd. Tpeak (min)=	5.00	10.00	
Unit Hyd. peak (cms)=	0.33	0.15	
			TOTALS
PEAK FLOW (cms)=	0.01	0.00	0.006 (iii)
TIME TO PEAK (hrs)=	6.33	7.00	7.00
RUNOFF VOLUME (mm)=	192.00	179.00	190.40
TOTAL RAINFALL (mm)=	193.00	193.00	193.00
RUNOFF COEFFICIENT =	0.99	0.93	0.99

***** WARNING: STORAGE COEFF. IS SMALLER THAN TIME STEP!

(i) CN PROCEDURE SELECTED FOR PERVIOUS LOSSES:
CN* = 95.0 Ia = Dep. Storage (Above)
(ii) TIME STEP (DT) SHOULD BE SMALLER OR EQUAL
THAN THE STORAGE COEFFICIENT.
(iii) PEAK FLOW DOES NOT INCLUDE BASEFLOW IF ANY.

ADD HYD (11000)		AREA	QPEAK	TPEAK	R.V.
		(ha)	(cms)	(hrs)	(mm)
1 + 2 = 3	ID1= 1 (1100):	0.05	0.006	7.00	190.40
	+ ID2= 2 (11001):	105.34	6.919	7.08	140.98
	ID = 3 (11000):	105.39	6.922	7.08	141.01

NOTE: PEAK FLOWS DO NOT INCLUDE BASEFLOWS IF ANY.

CALIB STANDHYD (1001)	Area (ha)= 9.07	
ID= 1 DT= 5.0 min	Total Imp(%)= 75.00	Dir. Conn.(%)= 54.00

		IMPERVIOUS	PERVIOUS (i)
Surface Area	(ha)=	6.80	2.27
Dep. Storage	(mm)=	1.00	1.50
Average Slope	(%)=	1.00	2.00
Length	(m)=	245.90	40.00
Mannings n	=	0.013	0.250

NOTE: RAINFALL WAS TRANSFORMED TO 5.0 MIN. TIME STEP.

---- TRANSFORMED HYETOGRAPH ----

TIME hrs	RAIN mm/hr	TIME hrs	RAIN mm/hr	TIME hrs	RAIN mm/hr	TIME hrs	RAIN mm/hr
0.083	15.00	3.333	3.00	6.583	43.00	9.83	13.00
0.167	15.00	3.417	3.00	6.667	43.00	9.92	13.00
0.250	15.00	3.500	3.00	6.750	43.00	10.00	13.00
0.333	15.00	3.583	3.00	6.833	43.00	10.08	13.00
0.417	15.00	3.667	3.00	6.917	43.00	10.17	13.00
0.500	15.00	3.750	3.00	7.000	43.00	10.25	13.00
0.583	15.00	3.833	3.00	7.083	20.00	10.33	13.00
0.667	15.00	3.917	3.00	7.167	20.00	10.42	13.00
0.750	15.00	4.000	3.00	7.250	20.00	10.50	13.00
0.833	15.00	4.083	5.00	7.333	20.00	10.58	13.00
0.917	15.00	4.167	5.00	7.417	20.00	10.67	13.00
1.000	15.00	4.250	5.00	7.500	20.00	10.75	13.00
1.083	20.00	4.333	5.00	7.583	20.00	10.83	13.00
1.167	20.00	4.417	5.00	7.667	20.00	10.92	13.00
1.250	20.00	4.500	5.00	7.750	20.00	11.00	13.00
1.333	20.00	4.583	5.00	7.833	20.00	11.08	8.00
1.417	20.00	4.667	5.00	7.917	20.00	11.17	8.00
1.500	20.00	4.750	5.00	8.000	20.00	11.25	8.00
1.583	20.00	4.833	5.00	8.083	23.00	11.33	8.00
1.667	20.00	4.917	5.00	8.167	23.00	11.42	8.00
1.750	20.00	5.000	5.00	8.250	23.00	11.50	8.00
1.833	20.00	5.083	20.00	8.333	23.00	11.58	8.00
1.917	20.00	5.167	20.00	8.417	23.00	11.67	8.00
2.000	20.00	5.250	20.00	8.500	23.00	11.75	8.00
2.083	10.00	5.333	20.00	8.583	23.00	11.83	8.00
2.167	10.00	5.417	20.00	8.667	23.00	11.92	8.00
2.250	10.00	5.500	20.00	8.750	23.00	12.00	8.00
2.333	10.00	5.583	20.00	8.833	23.00	12.08	0.00
2.417	10.00	5.667	20.00	8.917	23.00	12.17	0.00
2.500	10.00	5.750	20.00	9.000	23.00	12.25	0.00
2.583	10.00	5.833	20.00	9.083	13.00	12.33	0.00
2.667	10.00	5.917	20.00	9.167	13.00	12.42	0.00
2.750	10.00	6.000	20.00	9.250	13.00	12.50	0.00
2.833	10.00	6.083	43.00	9.333	13.00	12.58	0.00
2.917	10.00	6.167	43.00	9.417	13.00	12.67	0.00
3.000	10.00	6.250	43.00	9.500	13.00	12.75	0.00
3.083	3.00	6.333	43.00	9.583	13.00	12.83	0.00
3.167	3.00	6.417	43.00	9.667	13.00	12.92	0.00
3.250	3.00	6.500	43.00	9.750	13.00	13.00	0.00

Max.Eff.Inten.(mm/hr)=	43.00	76.89	
over (min)	5.00	15.00	
Storage Coeff. (min)=	6.14 (ii)	13.98 (ii)	
Unit Hyd. Tpeak (min)=	5.00	15.00	
Unit Hyd. peak (cms)=	0.19	0.08	
			TOTALS
PEAK FLOW (cms)=	0.58	0.48	1.061 (iii)
TIME TO PEAK (hrs)=	7.00	7.00	7.00
RUNOFF VOLUME (mm)=	192.00	172.07	182.83
TOTAL RAINFALL (mm)=	193.00	193.00	193.00
RUNOFF COEFFICIENT =	0.99	0.89	0.95

(i) CN PROCEDURE SELECTED FOR PERVIOUS LOSSES:
CN* = 86.0 Ia = Dep. Storage (Above)
(ii) TIME STEP (DT) SHOULD BE SMALLER OR EQUAL
THAN THE STORAGE COEFFICIENT.
(iii) PEAK FLOW DOES NOT INCLUDE BASEFLOW IF ANY.

```
--------------------
| ADD HYD  (  0002)|
|   1 +  2 =  3    |          AREA     QPEAK     TPEAK      R.V.
--------------------          (ha)     (cms)     (hrs)      (mm)
        ID1= 1 (  1001):      9.07    1.061      7.00    182.83
      + ID2= 2 ( 11000):    105.39    6.922      7.08    141.01
        ==========================================================
        ID = 3 (  0002):    114.46    7.827      7.00    144.32

     NOTE:  PEAK FLOWS DO NOT INCLUDE BASEFLOWS IF ANY.
------------------------------------------------------------------------------
--------------------
| ROUTE CHN( 10001)|
| IN= 2---> OUT= 1 |     Routing time step (min)'=  5.00
--------------------
               <------ DATA FOR SECTION (   1.1) ------>
               Distance      Elevation       Manning
                   0.00          0.15         0.0110
                   0.01          0.00    0.0110 /0.0110  Main Channel
                   4.26          0.02         0.0110      Main Channel
                   8.51          0.00    0.0110 /0.0110  Main Channel
                   8.52          0.15         0.0110

      <---------------------- TRAVEL TIME TABLE ---------------------->
       DEPTH     ELEV       VOLUME     FLOW RATE     VELOCITY   TRAV.TIME
        (m)       (m)      (cu.m.)       (cms)         (m/s)      (min)
       0.01      0.01     .757E+00        0.0          0.16        6.30
       0.02      0.02     .303E+01        0.0          0.25        3.97
       0.02      0.02     .674E+01        0.0          0.36        2.84
       0.03      0.03     .108E+02        0.1          0.49        2.07
       0.04      0.04     .149E+02        0.1          0.60        1.67
       0.05      0.05     .190E+02        0.2          0.71        1.42
       0.06      0.06     .230E+02        0.3          0.81        1.25
       0.06      0.06     .271E+02        0.4          0.90        1.12
       0.07      0.07     .312E+02        0.5          0.99        1.02
       0.08      0.08     .353E+02        0.6          1.07        0.94
       0.09      0.09     .394E+02        0.7          1.15        0.88
       0.09      0.09     .434E+02        0.9          1.23        0.82
       0.10      0.10     .475E+02        1.0          1.31        0.77
       0.11      0.11     .516E+02        1.2          1.38        0.73
       0.12      0.12     .557E+02        1.3          1.45        0.70
       0.13      0.13     .598E+02        1.5          1.52        0.66
       0.13      0.13     .638E+02        1.7          1.59        0.63
       0.14      0.14     .679E+02        1.9          1.66        0.61
       0.15      0.15     .720E+02        2.0          1.73        0.59

     **** WARNING:  TRAVEL TIME TABLE EXCEEDED
                                      <---- hydrograph ---->   <-pipe / channel->
                                AREA    QPEAK   TPEAK   R.V.   MAX DEPTH  MAX VEL
                                (ha)    (cms)   (hrs)   (mm)      (m)      (m/s)
   INFLOW : ID= 2 (  0002)  114.46     7.83    7.00 144.32      0.15      1.72
   OUTFLOW: ID= 1 ( 10001)  114.46     7.82    7.08 144.32      0.15      1.73



------------------------------------------------------------------------------
--------------------
| CALIB            |
| STANDHYD (  1000)|   Area    (ha)=   0.14
|ID= 1 DT= 5.0 min |   Total Imp(%)=  87.00   Dir. Conn.(%)=  78.00
--------------------
                           IMPERVIOUS    PERVIOUS (i)
     Surface Area     (ha)=       0.12         0.02
     Dep. Storage     (mm)=       1.00         1.50
```

Average Slope	(%)=	1.00	2.00
Length	(m)=	30.55	40.00
Mannings n	=	0.013	0.250

NOTE: RAINFALL WAS TRANSFORMED TO 5.0 MIN. TIME STEP.

---- TRANSFORMED HYETOGRAPH ----

TIME hrs	RAIN mm/hr	TIME hrs	RAIN mm/hr	TIME hrs	RAIN mm/hr	TIME hrs	RAIN mm/hr
0.083	15.00	3.333	3.00	6.583	43.00	9.83	13.00
0.167	15.00	3.417	3.00	6.667	43.00	9.92	13.00
0.250	15.00	3.500	3.00	6.750	43.00	10.00	13.00
0.333	15.00	3.583	3.00	6.833	43.00	10.08	13.00
0.417	15.00	3.667	3.00	6.917	43.00	10.17	13.00
0.500	15.00	3.750	3.00	7.000	43.00	10.25	13.00
0.583	15.00	3.833	3.00	7.083	20.00	10.33	13.00
0.667	15.00	3.917	3.00	7.167	20.00	10.42	13.00
0.750	15.00	4.000	3.00	7.250	20.00	10.50	13.00
0.833	15.00	4.083	5.00	7.333	20.00	10.58	13.00
0.917	15.00	4.167	5.00	7.417	20.00	10.67	13.00
1.000	15.00	4.250	5.00	7.500	20.00	10.75	13.00
1.083	20.00	4.333	5.00	7.583	20.00	10.83	13.00
1.167	20.00	4.417	5.00	7.667	20.00	10.92	13.00
1.250	20.00	4.500	5.00	7.750	20.00	11.00	13.00
1.333	20.00	4.583	5.00	7.833	20.00	11.08	8.00
1.417	20.00	4.667	5.00	7.917	20.00	11.17	8.00
1.500	20.00	4.750	5.00	8.000	20.00	11.25	8.00
1.583	20.00	4.833	5.00	8.083	23.00	11.33	8.00
1.667	20.00	4.917	5.00	8.167	23.00	11.42	8.00
1.750	20.00	5.000	5.00	8.250	23.00	11.50	8.00
1.833	20.00	5.083	20.00	8.333	23.00	11.58	8.00
1.917	20.00	5.167	20.00	8.417	23.00	11.67	8.00
2.000	20.00	5.250	20.00	8.500	23.00	11.75	8.00
2.083	10.00	5.333	20.00	8.583	23.00	11.83	8.00
2.167	10.00	5.417	20.00	8.667	23.00	11.92	8.00
2.250	10.00	5.500	20.00	8.750	23.00	12.00	8.00
2.333	10.00	5.583	20.00	8.833	23.00	12.08	0.00
2.417	10.00	5.667	20.00	8.917	23.00	12.17	0.00
2.500	10.00	5.750	20.00	9.000	23.00	12.25	0.00
2.583	10.00	5.833	20.00	9.083	13.00	12.33	0.00
2.667	10.00	5.917	20.00	9.167	13.00	12.42	0.00
2.750	10.00	6.000	20.00	9.250	13.00	12.50	0.00
2.833	10.00	6.083	43.00	9.333	13.00	12.58	0.00
2.917	10.00	6.167	43.00	9.417	13.00	12.67	0.00
3.000	10.00	6.250	43.00	9.500	13.00	12.75	0.00
3.083	3.00	6.333	43.00	9.583	13.00	12.83	0.00
3.167	3.00	6.417	43.00	9.667	13.00	12.92	0.00
3.250	3.00	6.500	43.00	9.750	13.00	13.00	0.00

Max.Eff.Inten.(mm/hr)=		43.00	71.54	
over (min)		5.00	10.00	
Storage Coeff. (min)=		1.76 (ii)	6.59 (ii)	
Unit Hyd. Tpeak (min)=		5.00	10.00	
Unit Hyd. peak (cms)=		0.32	0.14	
				TOTALS
PEAK FLOW	(cms)=	0.01	0.00	0.017 (iii)
TIME TO PEAK	(hrs)=	6.42	7.00	7.00
RUNOFF VOLUME	(mm)=	192.00	176.77	188.63
TOTAL RAINFALL	(mm)=	193.00	193.00	193.00
RUNOFF COEFFICIENT	=	0.99	0.92	0.98

***** WARNING: STORAGE COEFF. IS SMALLER THAN TIME STEP!

```
       (i) CN PROCEDURE SELECTED FOR PERVIOUS LOSSES:
            CN*  =  90.0    Ia = Dep. Storage  (Above)
      (ii) TIME STEP (DT) SHOULD BE SMALLER OR EQUAL
           THAN THE STORAGE COEFFICIENT.
     (iii) PEAK FLOW DOES NOT INCLUDE BASEFLOW IF ANY.

--------------------------------------------------------------------------------


--------------------
| ADD HYD  (  0001)|
|   1 +  2 =  3    |          AREA    QPEAK    TPEAK     R.V.
--------------------          (ha)    (cms)    (hrs)     (mm)
        ID1= 1 (  1000):     0.14   0.017     7.00   188.63
      + ID2= 2 ( 10001):   114.46   7.821     7.08   144.32
        ================================================
        ID = 3 (  0001):   114.60   7.831     7.08   144.38

     NOTE:  PEAK FLOWS DO NOT INCLUDE BASEFLOWS IF ANY.
--------------------------------------------------------------------------------
```

Appendix G
Hydrology Flow Summary

VO model 100-year peak flow comparison by rainfall distribution			
(m3/s)	6-hour	12-hour	24-hour
Chicago	8.97	9.3	9.72
SCS	9.25	9.09	8.99
AES	5.53	4.03	2.68
Tmmins		9.78	

Appendix H
Hydrology Model Sensitivity Analysis

100yr 24hr 10min Chicago	1	Outflow	0.083	114.6	8.865	9.333	59.927
100yr 24hr 10min Chicago	2	Outflow	0.083	114.46	8.862	9.333	59.886
100yr 24hr 10min Chicago	3	Outflow	0.083	105.34	7.011	9.333	57.373
100yr 24hr 10min Chicago	4	Outflow	0.083	104.91	6.923	9.333	57.218
100yr 24hr 10min Chicago	5	Outflow	0.083	104.47	6.831	9.333	57.068
100yr 24hr 10min Chicago	6	Outflow	0.083	103.65	6.65	9.333	56.825
100yr 24hr 10min Chicago	7	Outflow	0.083	103.27	6.567	9.333	56.699
100yr 24hr 10min Chicago	8	Outflow	0.083	102.89	6.505	9.333	56.656
100yr 24hr 10min Chicago	9	Outflow	0.083	102.68	6.445	9.333	56.576
100yr 24hr 10min Chicago	10	Outflow	0.083	102.55	6.423	9.333	56.529
100yr 24hr 10min Chicago	11	Outflow	0.083	102.05	6.314	9.333	56.407

100yr 24hr 10min Chicago	12	Outflow	0.083	101.98	6.306	9.333	56.415
100yr 24hr 10min Chicago	13	Outflow	0.083	98.43	5.68	9.333	55.799
100yr 24hr 10min Chicago	14	Outflow	0.083	98.34	5.64	9.333	55.785
100yr 24hr 10min Chicago	15	Outflow	0.083	14.67	2.301	9.25	60.954
100yr 24hr 10min Chicago	16	Outflow	0.083	14.28	2.184	9.25	61.187
100yr 24hr 10min Chicago	17	Outflow	0.083	12.57	1.846	9.333	59.775
100yr 24hr 10min Chicago	18	Outflow	0.083	11.41	1.655	9.333	56.266
100yr 24hr 10min Chicago	19	Outflow	0.083	83.56	3.824	10.167	54.825
100yr 24hr 10min Chicago	20	Outflow	0.083	81.05	3.784	10.083	54.792
100yr 24hr 10min Chicago	21	Outflow	0.083	72.76	3.726	9.917	51.463
100yr 24hr 10min Chicago	22	Outflow	0.083	65.76	3.652	9.75	49.47

100yr 24hr 10min Chicago	23	Outflow	0.083	38.68	1.907	10.167	48.832
100yr 24hr 10min Chicago	1000	Outflow	0.083	0.14	0.059	9.167	94.086
100yr 24hr 10min Chicago	1001	Outflow	0.083	9.07	3.081	9.167	88.882
100yr 24hr 10min Chicago	1100	Outflow	0.083	0.05	0.022	9.167	93.007
100yr 24hr 10min Chicago	1101	Outflow	0.083	0.19	0.081	9.167	94.214
100yr 24hr 10min Chicago	1200	Outflow	0.083	0.24	0.099	9.167	96.049
100yr 24hr 10min Chicago	1201	Outflow	0.083	0.32	0.133	9.167	92.465
100yr 24hr 10min Chicago	1300	Outflow	0.083	0.06	0.026	9.167	94.431
100yr 24hr 10min Chicago	1400	Outflow	0.083	0.06	0.026	9.167	94.063
100yr 24hr 10min Chicago	1500	Outflow	0.083	0.11	0.047	9.167	95.014
100yr 24hr 10min Chicago	1501	Outflow	0.083	0.56	0.184	9.167	84.333

100yr 24hr 10min Chicago	1600	Outflow	0.083	0.15	0.064	9.167	95.171
100yr 24hr 10min Chicago	1601	Outflow	0.083	0.26	0.097	9.167	89.484
100yr 24hr 10min Chicago	1700	Outflow	0.083	0.12	0.051	9.167	95.01
100yr 24hr 10min Chicago	1701	Outflow	0.083	0.38	0.092	9.167	68.407
100yr 24hr 10min Chicago	1702	Outflow	0.083	0.07	0.029	9.167	93.207
100yr 24hr 10min Chicago	1800	Outflow	0.083	0.14	0.061	9.167	96.598
100yr 24hr 10min Chicago	1801	Outflow	0.083	0.13	0.055	9.167	93.58
100yr 24hr 10min Chicago	1802	Outflow	0.083	0.45	0.14	9.167	80.249
100yr 24hr 10min Chicago	1900	Outflow	0.083	0.05	0.022	9.167	93.883
100yr 24hr 10min Chicago	1901	Outflow	0.083	0.07	0.009	9.333	43.939
100yr 24hr 10min Chicago	1902	Outflow	0.083	3.51	0.907	9.167	73.279

100yr 24hr 10min Chicago	2000	Outflow	0.083	0.04	0.017	9.167	92.437
100yr 24hr 10min Chicago	2001	Outflow	0.083	0.04	0.004	9.333	41.781
100yr 24hr 10min Chicago	2100	Outflow	0.083	0.05	0.022	9.167	94.142
100yr 24hr 10min Chicago	2101	Outflow	0.083	0.04	0.005	9.25	39.249
100yr 24hr 10min Chicago	2200	Outflow	0.083	0.11	0.048	9.167	96.435
100yr 24hr 10min Chicago	2201	Outflow	0.083	1.54	0.365	9.167	68.829
100yr 24hr 10min Chicago	2202	Outflow	0.083	0.16	0.068	9.167	95.107
100yr 24hr 10min Chicago	2203	Outflow	0.083	0.17	0.074	9.167	96.559
100yr 24hr 10min Chicago	2204	Outflow	0.083	11.31	1.639	9.333	56.155
100yr 24hr 10min Chicago	2205	Outflow	0.083	0.83	0.346	9.167	93.358
100yr 24hr 10min Chicago	2206	Outflow	0.083	0.33	0.143	9.167	96.894

100yr 24hr 10min Chicago	2207	Outflow	0.083	0.1	0.025	9.167	68.891
100yr 24hr 10min Chicago	2300	Outflow	0.083	0.23	0.01	9.5	22.866
100yr 24hr 10min Chicago	2400	Outflow	0.083	2.47	0.416	9.167	56.211
100yr 24hr 10min Chicago	2401	Outflow	0.083	4.17	1.436	9.167	96.704
100yr 24hr 10min Chicago	2500	Outflow	0.083	4.12	0.997	9.167	71.223
100yr 24hr 10min Chicago	2501	Outflow	0.083	4.86	1.282	9.167	78.593
100yr 24hr 10min Chicago	2600	Outflow	0.083	2.14	0.246	9.417	51.347
100yr 24hr 10min Chicago	2601	Outflow	0.083	20.7	1.737	9.583	50.084
100yr 24hr 10min Chicago	2700	Outflow	0.083	6.38	0.734	9.417	51.348
100yr 24hr 10min Chicago	2701	Outflow	0.083	4.55	0.341	9.667	48.83
100yr 24hr 10min Chicago	2800	Outflow	0.083	16.9	0.971	10	48.832

100yr 24hr 10min Chicago	2900	Outflow	0.083	17.23	0.848	10.167	48.833
100yr 24hr 10min Chicago	10001	Outflow	0.083	114.46	8.84	9.333	59.885
100yr 24hr 10min Chicago	11000	Outflow	0.083	105.39	7.022	9.333	57.39
100yr 24hr 10min Chicago	11001	Outflow	0.083	105.34	7.013	9.333	57.373
100yr 24hr 10min Chicago	12000	Outflow	0.083	105.15	6.978	9.333	57.307
100yr 24hr 10min Chicago	12001	Outflow	0.083	104.91	6.932	9.333	57.218
100yr 24hr 10min Chicago	13000	Outflow	0.083	104.59	6.867	9.333	57.11
100yr 24hr 10min Chicago	13001	Outflow	0.083	104.53	6.856	9.333	57.089
100yr 24hr 10min Chicago	14000	Outflow	0.083	104.53	6.85	9.333	57.089
100yr 24hr 10min Chicago	14001	Outflow	0.083	104.47	6.84	9.333	57.068
100yr 24hr 10min Chicago	15000	Outflow	0.083	103.91	6.721	9.333	56.921

100yr 24hr 10min Chicago	15001	Outflow	0.083	103.8	6.702	9.333	56.88
100yr 24hr 10min Chicago	16000	Outflow	0.083	103.8	6.691	9.333	56.881
100yr 24hr 10min Chicago	16001	Outflow	0.083	103.65	6.665	9.333	56.825
100yr 24hr 10min Chicago	17000	Outflow	0.083	103.39	6.6	9.333	56.743
100yr 24hr 10min Chicago	17001	Outflow	0.083	103.27	6.579	9.333	56.699
100yr 24hr 10min Chicago	18000	Outflow	0.083	102.82	6.493	9.333	56.631
100yr 24hr 10min Chicago	18001	Outflow	0.083	102.68	6.468	9.333	56.576
100yr 24hr 10min Chicago	19000	Outflow	0.083	102.1	6.342	9.333	56.425
100yr 24hr 10min Chicago	19001	Outflow	0.083	102.05	6.334	9.333	56.407
100yr 24hr 10min Chicago	20000	Outflow	0.083	98.47	5.703	9.333	55.814
100yr 24hr 10min Chicago	20001	Outflow	0.083	98.43	5.696	9.333	55.799

100yr 24hr 10min Chicago	21000	Outflow	0.083	98.39	5.675	9.333	55.805
100yr 24hr 10min Chicago	21001	Outflow	0.083	98.34	5.667	9.333	55.785
100yr 24hr 10min Chicago	22000	Outflow	0.083	14.78	2.339	9.25	61.218
100yr 24hr 10min Chicago	22001	Outflow	0.083	14.67	2.319	9.25	60.954
100yr 24hr 10min Chicago	22020	Outflow	0.083	14.44	2.293	9.25	61.561
100yr 24hr 10min Chicago	22021	Outflow	0.083	14.28	2.263	9.25	61.185
100yr 24hr 10min Chicago	22030	Outflow	0.083	12.74	1.893	9.25	60.263
100yr 24hr 10min Chicago	22031	Outflow	0.083	12.57	1.862	9.25	59.772
100yr 24hr 10min Chicago	22060	Outflow	0.083	11.74	1.701	9.333	57.4
100yr 24hr 10min Chicago	22061	Outflow	0.083	11.41	1.643	9.333	56.258
100yr 24hr 10min Chicago	24000	Outflow	0.083	83.52	3.824	10.167	54.832

100yr 24hr 10min Chicago	24001	Outflow	0.083	81.05	3.77	10.167	54.79
100yr 24hr 10min Chicago	24002	Outflow	0.083	83.52	3.824	10.167	54.832
100yr 24hr 10min Chicago	25000	Outflow	0.083	76.88	3.665	10.167	52.519
100yr 24hr 10min Chicago	25001	Outflow	0.083	72.76	3.563	10.167	51.459
100yr 24hr 10min Chicago	26000	Outflow	0.083	67.9	3.539	10	49.521
100yr 24hr 10min Chicago	26001	Outflow	0.083	65.76	3.44	10	49.462
100yr 24hr 10min Chicago	27000	Outflow	0.083	45.06	2.12	10.083	49.187
100yr 24hr 10min Chicago	27001	Outflow	0.083	38.68	1.896	10.25	48.831
100yr 24hr 10min Chicago	28000	Outflow	0.083	34.13	1.663	10.25	48.832
100yr 24hr 10min Chicago	28001	Outflow	0.083	17.23	0.791	10.417	48.832

100yr 24hr 10min Chicago	2300	Outflow	0.083	0.288	0.013	9.5	22.867
100yr 24hr 10min Chicago	2202	Outflow	0.083	0.2	0.085	9.167	95.107
100yr 24hr 10min Chicago	2203	Outflow	0.083	0.213	0.092	9.167	96.559
100yr 24hr 10min Chicago	2206	Outflow	0.083	0.413	0.179	9.167	96.894
100yr 24hr 10min Chicago	2207	Outflow	0.083	0.125	0.031	9.167	68.891
100yr 24hr 10min Chicago	2204	Outflow	0.083	14.138	2.038	9.333	56.155
100yr 24hr 10min Chicago	18	Outflow	0.083	14.263	2.058	9.333	56.266
100yr 24hr 10min Chicago	22061	Outflow	0.083	14.263	2.006	9.333	56.259
100yr 24hr 10min Chicago	22060	Outflow	0.083	14.675	2.078	9.333	57.401
100yr 24hr 10min Chicago	2205	Outflow	0.083	1.038	0.423	9.167	93.356
100yr 24hr 10min Chicago	17	Outflow	0.083	15.713	2.271	9.25	59.775

100yr 24hr 10min Chicago	22031	Outflow	0.083	15.713	2.313	9.25	59.773
100yr 24hr 10min Chicago	22030	Outflow	0.083	15.925	2.353	9.25	60.264
100yr 24hr 10min Chicago	2201	Outflow	0.083	1.925	0.454	9.167	68.829
100yr 24hr 10min Chicago	16	Outflow	0.083	17.85	2.718	9.25	61.188
100yr 24hr 10min Chicago	22021	Outflow	0.083	17.85	2.755	9.25	61.186
100yr 24hr 10min Chicago	22020	Outflow	0.083	18.05	2.792	9.25	61.562
100yr 24hr 10min Chicago	15	Outflow	0.083	18.338	2.801	9.25	60.956
100yr 24hr 10min Chicago	22001	Outflow	0.083	18.338	2.809	9.25	60.955
100yr 24hr 10min Chicago	2200	Outflow	0.083	0.138	0.06	9.167	96.435
100yr 24hr 10min Chicago	22000	Outflow	0.083	18.475	2.834	9.25	61.219
100yr 24hr 10min Chicago	2600	Outflow	0.083	2.675	0.308	9.417	51.347

100yr 24hr 10min Chicago	2700	Outflow	0.083	7.975	0.897	9.417	51.351
100yr 24hr 10min Chicago	2701	Outflow	0.083	5.688	0.426	9.667	48.83
100yr 24hr 10min Chicago	2800	Outflow	0.083	21.125	1.214	10	48.832
100yr 24hr 10min Chicago	2900	Outflow	0.083	21.538	1.06	10.167	48.833
100yr 24hr 10min Chicago	28001	Outflow	0.083	21.538	1.012	10.417	48.832
100yr 24hr 10min Chicago	28000	Outflow	0.083	42.663	2.115	10.25	48.832
100yr 24hr 10min Chicago	23	Outflow	0.083	48.35	2.425	10.083	48.832
100yr 24hr 10min Chicago	27001	Outflow	0.083	48.35	2.413	10.167	48.831
100yr 24hr 10min Chicago	27000	Outflow	0.083	56.325	2.709	10.083	49.188
100yr 24hr 10min Chicago	2601	Outflow	0.083	25.875	2.171	9.583	50.084
100yr 24hr 10min Chicago	22	Outflow	0.083	82.2	4.611	9.75	49.47

100yr 24hr 10min Chicago	26001	Outflow	0.083	82.2	4.316	10	49.464
100yr 24hr 10min Chicago	26000	Outflow	0.083	84.875	4.44	10	49.523
100yr 24hr 10min Chicago	2501	Outflow	0.083	6.075	1.587	9.167	78.593
100yr 24hr 10min Chicago	21	Outflow	0.083	90.95	4.657	9.917	51.465
100yr 24hr 10min Chicago	25001	Outflow	0.083	90.95	4.464	10.167	51.462
100yr 24hr 10min Chicago	2500	Outflow	0.083	5.15	1.237	9.167	71.223
100yr 24hr 10min Chicago	25000	Outflow	0.083	96.1	4.592	10.167	52.521
100yr 24hr 10min Chicago	2401	Outflow	0.083	5.213	1.779	9.167	96.704
100yr 24hr 10min Chicago	20	Outflow	0.083	101.313	4.734	10.167	54.794
100yr 24hr 10min Chicago	24001	Outflow	0.083	101.313	4.713	10.25	54.793
100yr 24hr 10min Chicago	2400	Outflow	0.083	3.088	0.449	9.333	56.212

100yr 24hr 10min Chicago	24000	Outflow	0.083	104.4	4.785	10.167	54.835
100yr 24hr 10min Chicago	24002	Outflow	0.083	104.4	4.783	10.167	54.835
100yr 24hr 10min Chicago	2101	Outflow	0.083	0.05	0.006	9.25	39.25
100yr 24hr 10min Chicago	19	Outflow	0.083	104.45	4.784	10.167	54.827
100yr 24hr 10min Chicago	14	Outflow	0.083	122.925	7.061	9.333	55.788
100yr 24hr 10min Chicago	21001	Outflow	0.083	122.925	7.083	9.333	55.788
100yr 24hr 10min Chicago	2100	Outflow	0.083	0.063	0.027	9.167	95.96
100yr 24hr 10min Chicago	21000	Outflow	0.083	122.988	7.094	9.333	55.808
100yr 24hr 10min Chicago	2001	Outflow	0.083	0.05	0.006	9.333	41.789
100yr 24hr 10min Chicago	13	Outflow	0.083	123.038	7.099	9.333	55.802
100yr 24hr 10min Chicago	20001	Outflow	0.083	123.038	7.109	9.333	55.802

100yr 24hr 10min Chicago	2000	Outflow	0.083	0.05	0.022	9.167	94.181
100yr 24hr 10min Chicago	20000	Outflow	0.083	123.088	7.118	9.333	55.818
100yr 24hr 10min Chicago	1902	Outflow	0.083	4.388	1.125	9.167	73.279
100yr 24hr 10min Chicago	12	Outflow	0.083	127.475	7.873	9.333	56.419
100yr 24hr 10min Chicago	1901	Outflow	0.083	0.088	0.011	9.333	43.939
100yr 24hr 10min Chicago	11	Outflow	0.083	127.563	7.883	9.333	56.41
100yr 24hr 10min Chicago	19001	Outflow	0.083	127.563	7.883	9.333	56.41
100yr 24hr 10min Chicago	1900	Outflow	0.083	0.063	0.027	9.167	95.702
100yr 24hr 10min Chicago	19000	Outflow	0.083	127.625	7.893	9.333	56.43
100yr 24hr 10min Chicago	1802	Outflow	0.083	0.563	0.175	9.167	80.248
100yr 24hr 10min Chicago	10	Outflow	0.083	128.188	7.994	9.333	56.534

100yr 24hr 10min Chicago	1801	Outflow	0.083	0.163	0.068	9.167	93.58
100yr 24hr 10min Chicago	9	Outflow	0.083	128.35	8.022	9.333	56.581
100yr 24hr 10min Chicago	18001	Outflow	0.083	128.35	8.031	9.333	56.581
100yr 24hr 10min Chicago	1800	Outflow	0.083	0.175	0.076	9.167	96.598
100yr 24hr 10min Chicago	18000	Outflow	0.083	128.525	8.061	9.333	56.635
100yr 24hr 10min Chicago	1702	Outflow	0.083	0.088	0.037	9.167	93.292
100yr 24hr 10min Chicago	8	Outflow	0.083	128.613	8.076	9.333	56.66
100yr 24hr 10min Chicago	1701	Outflow	0.083	0.475	0.115	9.167	68.407
100yr 24hr 10min Chicago	7	Outflow	0.083	129.088	8.154	9.333	56.704
100yr 24hr 10min Chicago	17001	Outflow	0.083	129.088	8.161	9.333	56.703
100yr 24hr 10min Chicago	1700	Outflow	0.083	0.15	0.064	9.167	95.009

100yr 24hr 10min Chicago	17000	Outflow	0.083	129.238	8.187	9.333	56.748
100yr 24hr 10min Chicago	1601	Outflow	0.083	0.325	0.121	9.167	89.484
100yr 24hr 10min Chicago	6	Outflow	0.083	129.563	8.25	9.333	56.83
100yr 24hr 10min Chicago	16001	Outflow	0.083	129.563	8.256	9.333	56.83
100yr 24hr 10min Chicago	1600	Outflow	0.083	0.188	0.08	9.167	95.171
100yr 24hr 10min Chicago	16000	Outflow	0.083	129.75	8.289	9.333	56.885
100yr 24hr 10min Chicago	15001	Outflow	0.083	129.75	8.292	9.333	56.885
100yr 24hr 10min Chicago	1500	Outflow	0.083	0.138	0.059	9.167	95.014
100yr 24hr 10min Chicago	15000	Outflow	0.083	129.888	8.317	9.333	56.926
100yr 24hr 10min Chicago	1501	Outflow	0.083	0.7	0.23	9.167	84.333
100yr 24hr 10min Chicago	5	Outflow	0.083	130.588	8.453	9.333	57.073

100yr 24hr 10min Chicago	14001	Outflow	0.083	130.588	8.456	9.333	57.073
100yr 24hr 10min Chicago	1400	Outflow	0.083	0.075	0.032	9.167	95.357
100yr 24hr 10min Chicago	14000	Outflow	0.083	130.663	8.469	9.333	57.095
100yr 24hr 10min Chicago	13001	Outflow	0.083	130.663	8.468	9.333	57.094
100yr 24hr 10min Chicago	1300	Outflow	0.083	0.075	0.032	9.167	95.725
100yr 24hr 10min Chicago	13000	Outflow	0.083	130.738	8.481	9.333	57.117
100yr 24hr 10min Chicago	1201	Outflow	0.083	0.4	0.166	9.167	92.465
100yr 24hr 10min Chicago	4	Outflow	0.083	131.138	8.551	9.333	57.224
100yr 24hr 10min Chicago	12001	Outflow	0.083	131.138	8.522	9.333	57.224
100yr 24hr 10min Chicago	1200	Outflow	0.083	0.3	0.123	9.167	96.059
100yr 24hr 10min Chicago	12000	Outflow	0.083	131.438	8.579	9.333	57.313

100yr 24hr 10min Chicago	1101	Outflow	0.083	0.238	0.101	9.167	94.214
100yr 24hr 10min Chicago	3	Outflow	0.083	131.675	8.621	9.333	57.379
100yr 24hr 10min Chicago	11001	Outflow	0.083	131.675	8.613	9.333	57.379
100yr 24hr 10min Chicago	1100	Outflow	0.083	0.063	0.027	9.167	94.822
100yr 24hr 10min Chicago	11000	Outflow	0.083	131.738	8.624	9.333	57.397
100yr 24hr 10min Chicago	1001	Outflow	0.083	11.338	3.81	9.167	88.882
100yr 24hr 10min Chicago	2	Outflow	0.083	143.075	10.941	9.333	59.892
100yr 24hr 10min Chicago	10001	Outflow	0.083	143.075	10.897	9.333	59.892
100yr 24hr 10min Chicago	1000	Outflow	0.083	0.175	0.074	9.167	94.085
100yr 24hr 10min Chicago	1	Outflow	0.083	143.25	10.927	9.333	59.934

100yr 24hr 10min Chicago	2300	Outflow	0.083	0.173	0.008	9.5	22.865
100yr 24hr 10min Chicago	2202	Outflow	0.083	0.12	0.051	9.167	95.108
100yr 24hr 10min Chicago	2203	Outflow	0.083	0.128	0.055	9.167	96.559
100yr 24hr 10min Chicago	2206	Outflow	0.083	0.248	0.108	9.167	96.894
100yr 24hr 10min Chicago	2207	Outflow	0.083	0.075	0.019	9.167	68.502
100yr 24hr 10min Chicago	2204	Outflow	0.083	8.483	1.237	9.333	56.154
100yr 24hr 10min Chicago	18	Outflow	0.083	8.558	1.249	9.333	56.262
100yr 24hr 10min Chicago	22061	Outflow	0.083	8.558	1.24	9.333	56.251
100yr 24hr 10min Chicago	22060	Outflow	0.083	8.805	1.283	9.333	57.394
100yr 24hr 10min Chicago	2205	Outflow	0.083	0.623	0.26	9.167	93.354
100yr 24hr 10min Chicago	17	Outflow	0.083	9.428	1.392	9.333	59.768

100yr 24hr 10min Chicago	22031	Outflow	0.083	9.428	1.403	9.25	59.764
100yr 24hr 10min Chicago	22030	Outflow	0.083	9.555	1.426	9.25	60.255
100yr 24hr 10min Chicago	2201	Outflow	0.083	1.155	0.275	9.167	68.828
100yr 24hr 10min Chicago	16	Outflow	0.083	10.71	1.645	9.25	61.18
100yr 24hr 10min Chicago	22021	Outflow	0.083	10.71	1.716	9.25	61.178
100yr 24hr 10min Chicago	22020	Outflow	0.083	10.83	1.739	9.25	61.554
100yr 24hr 10min Chicago	15	Outflow	0.083	11.003	1.744	9.25	60.948
100yr 24hr 10min Chicago	22001	Outflow	0.083	11.003	1.804	9.25	60.946
100yr 24hr 10min Chicago	2200	Outflow	0.083	0.083	0.036	9.167	96.435
100yr 24hr 10min Chicago	22000	Outflow	0.083	11.085	1.82	9.25	61.211
100yr 24hr 10min Chicago	2600	Outflow	0.083	1.605	0.185	9.417	51.347

100yr 24hr 10min Chicago	2700	Outflow	0.083	4.785	0.538	9.417	51.351
100yr 24hr 10min Chicago	2701	Outflow	0.083	3.413	0.256	9.667	48.83
100yr 24hr 10min Chicago	2800	Outflow	0.083	12.675	0.728	10	48.832
100yr 24hr 10min Chicago	2900	Outflow	0.083	12.923	0.636	10.167	48.833
100yr 24hr 10min Chicago	28001	Outflow	0.083	12.923	0.578	10.5	48.832
100yr 24hr 10min Chicago	28000	Outflow	0.083	25.598	1.22	10.25	48.832
100yr 24hr 10min Chicago	23	Outflow	0.083	29.01	1.402	10.167	48.832
100yr 24hr 10min Chicago	27001	Outflow	0.083	29.01	1.394	10.25	48.831
100yr 24hr 10min Chicago	27000	Outflow	0.083	33.795	1.569	10.083	49.188
100yr 24hr 10min Chicago	2601	Outflow	0.083	15.525	1.303	9.583	50.084
100yr 24hr 10min Chicago	22	Outflow	0.083	49.32	2.723	9.75	49.47

100yr 24hr 10min Chicago	26001	Outflow	0.083	49.32	2.608	10	49.459
100yr 24hr 10min Chicago	26000	Outflow	0.083	50.925	2.683	10	49.519
100yr 24hr 10min Chicago	2501	Outflow	0.083	3.645	0.973	9.167	78.593
100yr 24hr 10min Chicago	21	Outflow	0.083	54.57	2.809	9.917	51.461
100yr 24hr 10min Chicago	25001	Outflow	0.083	54.57	2.713	10.083	51.456
100yr 24hr 10min Chicago	2500	Outflow	0.083	3.09	0.755	9.167	71.223
100yr 24hr 10min Chicago	25000	Outflow	0.083	57.66	2.797	10.083	52.515
100yr 24hr 10min Chicago	2401	Outflow	0.083	3.128	1.088	9.167	96.704
100yr 24hr 10min Chicago	20	Outflow	0.083	60.788	2.891	10.083	54.789
100yr 24hr 10min Chicago	24001	Outflow	0.083	60.788	2.857	10.167	54.786
100yr 24hr 10min Chicago	2400	Outflow	0.083	1.853	0.314	9.167	56.211

100yr 24hr 10min Chicago	24000	Outflow	0.083	62.64	2.898	10.167	54.828
100yr 24hr 10min Chicago	24002	Outflow	0.083	62.64	2.898	10.167	54.828
100yr 24hr 10min Chicago	2101	Outflow	0.083	0.03	0.004	9.25	39.24
100yr 24hr 10min Chicago	19	Outflow	0.083	62.67	2.899	10.167	54.821
100yr 24hr 10min Chicago	14	Outflow	0.083	73.755	4.301	9.25	55.781
100yr 24hr 10min Chicago	21001	Outflow	0.083	73.755	4.328	9.25	55.781
100yr 24hr 10min Chicago	2100	Outflow	0.083	0.038	0.016	9.167	91.932
100yr 24hr 10min Chicago	21000	Outflow	0.083	73.793	4.335	9.25	55.799
100yr 24hr 10min Chicago	2001	Outflow	0.083	0.03	0.003	9.333	41.78
100yr 24hr 10min Chicago	13	Outflow	0.083	73.823	4.338	9.25	55.794
100yr 24hr 10min Chicago	20001	Outflow	0.083	73.823	4.348	9.25	55.794

100yr 24hr 10min Chicago	2000	Outflow	0.083	0.03	0.013	9.167	90.374
100yr 24hr 10min Chicago	20000	Outflow	0.083	73.853	4.354	9.25	55.808
100yr 24hr 10min Chicago	1902	Outflow	0.083	2.633	0.686	9.167	73.278
100yr 24hr 10min Chicago	12	Outflow	0.083	76.485	4.885	9.25	56.409
100yr 24hr 10min Chicago	1901	Outflow	0.083	0.053	0.006	9.333	43.933
100yr 24hr 10min Chicago	11	Outflow	0.083	76.538	4.891	9.25	56.4
100yr 24hr 10min Chicago	19001	Outflow	0.083	76.538	4.875	9.25	56.4
100yr 24hr 10min Chicago	1900	Outflow	0.083	0.038	0.016	9.167	91.674
100yr 24hr 10min Chicago	19000	Outflow	0.083	76.575	4.882	9.25	56.418
100yr 24hr 10min Chicago	1802	Outflow	0.083	0.338	0.105	9.167	80.241
100yr 24hr 10min Chicago	10	Outflow	0.083	76.913	4.952	9.25	56.522

100yr 24hr 10min Chicago	1801	Outflow	0.083	0.098	0.041	9.167	93.58
100yr 24hr 10min Chicago	9	Outflow	0.083	77.01	4.969	9.25	56.569
100yr 24hr 10min Chicago	18001	Outflow	0.083	77.01	4.92	9.25	56.569
100yr 24hr 10min Chicago	1800	Outflow	0.083	0.105	0.046	9.167	96.599
100yr 24hr 10min Chicago	18000	Outflow	0.083	77.115	4.939	9.25	56.623
100yr 24hr 10min Chicago	1702	Outflow	0.083	0.053	0.022	9.167	90.94
100yr 24hr 10min Chicago	8	Outflow	0.083	77.168	4.948	9.25	56.647
100yr 24hr 10min Chicago	1701	Outflow	0.083	0.285	0.069	9.167	68.408
100yr 24hr 10min Chicago	7	Outflow	0.083	77.453	5.003	9.25	56.69
100yr 24hr 10min Chicago	17001	Outflow	0.083	77.453	4.968	9.25	56.69
100yr 24hr 10min Chicago	1700	Outflow	0.083	0.09	0.039	9.167	95.01

100yr 24hr 10min Chicago	17000	Outflow	0.083	77.543	4.984	9.25	56.734
100yr 24hr 10min Chicago	1601	Outflow	0.083	0.195	0.073	9.167	89.47
100yr 24hr 10min Chicago	6	Outflow	0.083	77.738	5.029	9.25	56.816
100yr 24hr 10min Chicago	16001	Outflow	0.083	77.738	5.021	9.333	56.816
100yr 24hr 10min Chicago	1600	Outflow	0.083	0.113	0.048	9.167	95.171
100yr 24hr 10min Chicago	16000	Outflow	0.083	77.85	5.041	9.333	56.872
100yr 24hr 10min Chicago	15001	Outflow	0.083	77.85	5.072	9.333	56.871
100yr 24hr 10min Chicago	1500	Outflow	0.083	0.083	0.035	9.167	95.014
100yr 24hr 10min Chicago	15000	Outflow	0.083	77.933	5.086	9.333	56.912
100yr 24hr 10min Chicago	1501	Outflow	0.083	0.42	0.139	9.167	84.333
100yr 24hr 10min Chicago	5	Outflow	0.083	78.353	5.168	9.333	57.059

100yr 24hr 10min Chicago	14001	Outflow	0.083	78.353	5.188	9.333	57.059
100yr 24hr 10min Chicago	1400	Outflow	0.083	0.045	0.019	9.167	91.884
100yr 24hr 10min Chicago	14000	Outflow	0.083	78.398	5.196	9.333	57.079
100yr 24hr 10min Chicago	13001	Outflow	0.083	78.398	5.211	9.333	57.079
100yr 24hr 10min Chicago	1300	Outflow	0.083	0.045	0.019	9.167	92.251
100yr 24hr 10min Chicago	13000	Outflow	0.083	78.443	5.219	9.333	57.099
100yr 24hr 10min Chicago	1201	Outflow	0.083	0.24	0.1	9.167	92.466
100yr 24hr 10min Chicago	4	Outflow	0.083	78.683	5.26	9.333	57.207
100yr 24hr 10min Chicago	12001	Outflow	0.083	78.683	5.286	9.333	57.206
100yr 24hr 10min Chicago	1200	Outflow	0.083	0.18	0.074	9.167	96.05
100yr 24hr 10min Chicago	12000	Outflow	0.083	78.863	5.32	9.333	57.295

100yr 24hr 10min Chicago	1101	Outflow	0.083	0.143	0.06	9.167	94.214
100yr 24hr 10min Chicago	3	Outflow	0.083	79.005	5.345	9.333	57.362
100yr 24hr 10min Chicago	11001	Outflow	0.083	79.005	5.35	9.333	57.362
100yr 24hr 10min Chicago	1100	Outflow	0.083	0.038	0.016	9.167	90.801
100yr 24hr 10min Chicago	11000	Outflow	0.083	79.043	5.356	9.333	57.378
100yr 24hr 10min Chicago	1001	Outflow	0.083	6.803	2.34	9.167	88.882
100yr 24hr 10min Chicago	2	Outflow	0.083	85.845	6.725	9.333	59.874
100yr 24hr 10min Chicago	10001	Outflow	0.083	85.845	6.704	9.333	59.874
100yr 24hr 10min Chicago	1000	Outflow	0.083	0.105	0.045	9.167	94.086
100yr 24hr 10min Chicago	1	Outflow	0.083	85.95	6.722	9.333	59.916

100yr 24hr 10min Chicago	2300	Outflow	0.083	0.23	0.011	9.417	22.863
100yr 24hr 10min Chicago	2202	Outflow	0.083	0.16	0.068	9.167	95.107
100yr 24hr 10min Chicago	2203	Outflow	0.083	0.17	0.074	9.167	96.559
100yr 24hr 10min Chicago	2206	Outflow	0.083	0.33	0.143	9.167	96.894
100yr 24hr 10min Chicago	2207	Outflow	0.083	0.1	0.025	9.167	68.891
100yr 24hr 10min Chicago	2204	Outflow	0.083	11.31	1.639	9.333	56.155
100yr 24hr 10min Chicago	18	Outflow	0.083	11.41	1.655	9.333	56.266
100yr 24hr 10min Chicago	22061	Outflow	0.083	11.41	1.643	9.333	56.258
100yr 24hr 10min Chicago	22060	Outflow	0.083	11.74	1.701	9.333	57.4
100yr 24hr 10min Chicago	2205	Outflow	0.083	0.83	0.346	9.167	93.358
100yr 24hr 10min Chicago	17	Outflow	0.083	12.57	1.846	9.333	59.775

100yr 24hr 10min Chicago	22031	Outflow	0.083	12.57	1.862	9.25	59.772
100yr 24hr 10min Chicago	22030	Outflow	0.083	12.74	1.893	9.25	60.263
100yr 24hr 10min Chicago	2201	Outflow	0.083	1.54	0.365	9.167	68.829
100yr 24hr 10min Chicago	16	Outflow	0.083	14.28	2.184	9.25	61.187
100yr 24hr 10min Chicago	22021	Outflow	0.083	14.28	2.263	9.25	61.185
100yr 24hr 10min Chicago	22020	Outflow	0.083	14.44	2.293	9.25	61.561
100yr 24hr 10min Chicago	15	Outflow	0.083	14.67	2.301	9.25	60.954
100yr 24hr 10min Chicago	22001	Outflow	0.083	14.67	2.32	9.25	60.954
100yr 24hr 10min Chicago	2200	Outflow	0.083	0.11	0.048	9.167	96.435
100yr 24hr 10min Chicago	22000	Outflow	0.083	14.78	2.34	9.25	61.218
100yr 24hr 10min Chicago	2600	Outflow	0.083	2.14	0.251	9.417	51.343

100yr 24hr 10min Chicago	2700	Outflow	0.083	6.38	0.734	9.417	51.348
100yr 24hr 10min Chicago	2701	Outflow	0.083	4.55	0.361	9.667	48.829
100yr 24hr 10min Chicago	2800	Outflow	0.083	16.9	1.023	9.917	48.832
100yr 24hr 10min Chicago	2900	Outflow	0.083	17.23	0.901	10.083	48.833
100yr 24hr 10min Chicago	28001	Outflow	0.083	17.23	0.838	10.333	48.832
100yr 24hr 10min Chicago	28000	Outflow	0.083	34.13	1.757	10.167	48.832
100yr 24hr 10min Chicago	23	Outflow	0.083	38.68	2.012	10.083	48.832
100yr 24hr 10min Chicago	27001	Outflow	0.083	38.68	2.001	10.167	48.831
100yr 24hr 10min Chicago	27000	Outflow	0.083	45.06	2.256	10	49.187
100yr 24hr 10min Chicago	2601	Outflow	0.083	20.7	1.798	9.583	50.083
100yr 24hr 10min Chicago	22	Outflow	0.083	65.76	3.833	9.75	49.469

100yr 24hr 10min Chicago	26001	Outflow	0.083	65.76	3.601	10	49.461
100yr 24hr 10min Chicago	26000	Outflow	0.083	67.9	3.704	9.917	49.521
100yr 24hr 10min Chicago	2501	Outflow	0.083	4.86	1.282	9.167	78.593
100yr 24hr 10min Chicago	21	Outflow	0.083	72.76	3.899	9.917	51.463
100yr 24hr 10min Chicago	25001	Outflow	0.083	72.76	3.713	10.167	51.459
100yr 24hr 10min Chicago	2500	Outflow	0.083	4.12	0.997	9.167	71.223
100yr 24hr 10min Chicago	25000	Outflow	0.083	76.88	3.818	10.083	52.518
100yr 24hr 10min Chicago	2401	Outflow	0.083	4.17	1.436	9.167	96.704
100yr 24hr 10min Chicago	20	Outflow	0.083	81.05	3.944	10.083	54.791
100yr 24hr 10min Chicago	24001	Outflow	0.083	81.05	3.927	10.167	54.79
100yr 24hr 10min Chicago	2400	Outflow	0.083	2.47	0.416	9.167	56.211

100yr 24hr 10min Chicago	24000	Outflow	0.083	83.52	3.981	10.167	54.832
100yr 24hr 10min Chicago	24002	Outflow	0.083	83.52	3.982	10.167	54.832
100yr 24hr 10min Chicago	2101	Outflow	0.083	0.04	0.005	9.167	39.05
100yr 24hr 10min Chicago	19	Outflow	0.083	83.56	3.983	10.167	54.824
100yr 24hr 10min Chicago	14	Outflow	0.083	98.34	5.665	9.333	55.785
100yr 24hr 10min Chicago	21001	Outflow	0.083	98.34	5.691	9.333	55.785
100yr 24hr 10min Chicago	2100	Outflow	0.083	0.05	0.022	9.167	94.142
100yr 24hr 10min Chicago	21000	Outflow	0.083	98.39	5.7	9.333	55.804
100yr 24hr 10min Chicago	2001	Outflow	0.083	0.04	0.005	9.333	41.735
100yr 24hr 10min Chicago	13	Outflow	0.083	98.43	5.704	9.333	55.799
100yr 24hr 10min Chicago	20001	Outflow	0.083	98.43	5.72	9.333	55.799

100yr 24hr 10min Chicago	2000	Outflow	0.083	0.04	0.017	9.167	92.437
100yr 24hr 10min Chicago	20000	Outflow	0.083	98.47	5.727	9.333	55.813
100yr 24hr 10min Chicago	1902	Outflow	0.083	3.51	0.907	9.167	73.279
100yr 24hr 10min Chicago	12	Outflow	0.083	101.98	6.33	9.333	56.415
100yr 24hr 10min Chicago	1901	Outflow	0.083	0.07	0.009	9.25	43.899
100yr 24hr 10min Chicago	11	Outflow	0.083	102.05	6.338	9.333	56.406
100yr 24hr 10min Chicago	19001	Outflow	0.083	102.05	6.357	9.333	56.406
100yr 24hr 10min Chicago	1900	Outflow	0.083	0.05	0.022	9.167	93.883
100yr 24hr 10min Chicago	19000	Outflow	0.083	102.1	6.365	9.333	56.424
100yr 24hr 10min Chicago	1802	Outflow	0.083	0.45	0.14	9.167	80.249
100yr 24hr 10min Chicago	10	Outflow	0.083	102.55	6.446	9.333	56.529

100yr 24hr 10min Chicago	1801	Outflow	0.083	0.13	0.055	9.167	93.58
100yr 24hr 10min Chicago	9	Outflow	0.083	102.68	6.469	9.333	56.576
100yr 24hr 10min Chicago	18001	Outflow	0.083	102.68	6.49	9.333	56.576
100yr 24hr 10min Chicago	1800	Outflow	0.083	0.14	0.061	9.167	96.598
100yr 24hr 10min Chicago	18000	Outflow	0.083	102.82	6.514	9.333	56.63
100yr 24hr 10min Chicago	1702	Outflow	0.083	0.07	0.029	9.167	93.207
100yr 24hr 10min Chicago	8	Outflow	0.083	102.89	6.526	9.333	56.655
100yr 24hr 10min Chicago	1701	Outflow	0.083	0.38	0.092	9.167	68.407
100yr 24hr 10min Chicago	7	Outflow	0.083	103.27	6.589	9.333	56.698
100yr 24hr 10min Chicago	17001	Outflow	0.083	103.27	6.599	9.333	56.698
100yr 24hr 10min Chicago	1700	Outflow	0.083	0.12	0.051	9.167	95.01

100yr 24hr 10min Chicago	17000	Outflow	0.083	103.39	6.62	9.333	56.742
100yr 24hr 10min Chicago	1601	Outflow	0.083	0.26	0.097	9.167	89.484
100yr 24hr 10min Chicago	6	Outflow	0.083	103.65	6.67	9.333	56.825
100yr 24hr 10min Chicago	16001	Outflow	0.083	103.65	6.684	9.333	56.825
100yr 24hr 10min Chicago	1600	Outflow	0.083	0.15	0.064	9.167	95.171
100yr 24hr 10min Chicago	16000	Outflow	0.083	103.8	6.71	9.333	56.88
100yr 24hr 10min Chicago	15001	Outflow	0.083	103.8	6.721	9.333	56.88
100yr 24hr 10min Chicago	1500	Outflow	0.083	0.11	0.047	9.167	95.014
100yr 24hr 10min Chicago	15000	Outflow	0.083	103.91	6.74	9.333	56.92
100yr 24hr 10min Chicago	1501	Outflow	0.083	0.56	0.184	9.167	84.333
100yr 24hr 10min Chicago	5	Outflow	0.083	104.47	6.85	9.333	57.067

100yr 24hr 10min Chicago	14001	Outflow	0.083	104.47	6.858	9.333	57.067
100yr 24hr 10min Chicago	1400	Outflow	0.083	0.06	0.026	9.167	94.063
100yr 24hr 10min Chicago	14000	Outflow	0.083	104.53	6.868	9.333	57.088
100yr 24hr 10min Chicago	13001	Outflow	0.083	104.53	6.874	9.333	57.088
100yr 24hr 10min Chicago	1300	Outflow	0.083	0.06	0.026	9.167	94.431
100yr 24hr 10min Chicago	13000	Outflow	0.083	104.59	6.885	9.333	57.11
100yr 24hr 10min Chicago	1201	Outflow	0.083	0.32	0.133	9.167	92.465
100yr 24hr 10min Chicago	4	Outflow	0.083	104.91	6.941	9.333	57.218
100yr 24hr 10min Chicago	12001	Outflow	0.083	104.91	6.948	9.333	57.217
100yr 24hr 10min Chicago	1200	Outflow	0.083	0.24	0.099	9.167	96.049
100yr 24hr 10min Chicago	12000	Outflow	0.083	105.15	6.994	9.333	57.306

100yr 24hr 10min Chicago	1101	Outflow	0.083	0.19	0.081	9.167	94.214
100yr 24hr 10min Chicago	3	Outflow	0.083	105.34	7.028	9.333	57.373
100yr 24hr 10min Chicago	11001	Outflow	0.083	105.34	7.029	9.333	57.373
100yr 24hr 10min Chicago	1100	Outflow	0.083	0.05	0.022	9.167	93.007
100yr 24hr 10min Chicago	11000	Outflow	0.083	105.39	7.038	9.333	57.389
100yr 24hr 10min Chicago	1001	Outflow	0.083	9.07	3.081	9.167	88.882
100yr 24hr 10min Chicago	2	Outflow	0.083	114.46	8.879	9.333	59.885
100yr 24hr 10min Chicago	10001	Outflow	0.083	114.46	8.856	9.333	59.885
100yr 24hr 10min Chicago	1000	Outflow	0.083	0.14	0.059	9.167	94.086
100yr 24hr 10min Chicago	1	Outflow	0.083	114.6	8.88	9.333	59.927

100yr 24hr 10min Chicago	2300	Outflow	0.083	0.23	0.01	9.5	22.869
100yr 24hr 10min Chicago	2202	Outflow	0.083	0.16	0.068	9.167	95.107
100yr 24hr 10min Chicago	2203	Outflow	0.083	0.17	0.074	9.167	96.559
100yr 24hr 10min Chicago	2206	Outflow	0.083	0.33	0.143	9.167	96.894
100yr 24hr 10min Chicago	2207	Outflow	0.083	0.1	0.025	9.167	68.891
100yr 24hr 10min Chicago	2204	Outflow	0.083	11.31	1.639	9.333	56.155
100yr 24hr 10min Chicago	18	Outflow	0.083	11.41	1.655	9.333	56.266
100yr 24hr 10min Chicago	22061	Outflow	0.083	11.41	1.643	9.333	56.258
100yr 24hr 10min Chicago	22060	Outflow	0.083	11.74	1.701	9.333	57.4
100yr 24hr 10min Chicago	2205	Outflow	0.083	0.83	0.346	9.167	93.358
100yr 24hr 10min Chicago	17	Outflow	0.083	12.57	1.846	9.333	59.775

100yr 24hr 10min Chicago	22031	Outflow	0.083	12.57	1.862	9.25	59.772
100yr 24hr 10min Chicago	22030	Outflow	0.083	12.74	1.893	9.25	60.263
100yr 24hr 10min Chicago	2201	Outflow	0.083	1.54	0.365	9.167	68.829
100yr 24hr 10min Chicago	16	Outflow	0.083	14.28	2.184	9.25	61.187
100yr 24hr 10min Chicago	22021	Outflow	0.083	14.28	2.263	9.25	61.185
100yr 24hr 10min Chicago	22020	Outflow	0.083	14.44	2.293	9.25	61.561
100yr 24hr 10min Chicago	15	Outflow	0.083	14.67	2.3	9.25	60.954
100yr 24hr 10min Chicago	22001	Outflow	0.083	14.67	2.318	9.25	60.954
100yr 24hr 10min Chicago	2200	Outflow	0.083	0.11	0.048	9.167	96.435
100yr 24hr 10min Chicago	22000	Outflow	0.083	14.78	2.338	9.25	61.218
100yr 24hr 10min Chicago	2600	Outflow	0.083	2.14	0.235	9.417	51.354

100yr 24hr 10min Chicago	2700	Outflow	0.083	6.38	0.701	9.417	51.354
100yr 24hr 10min Chicago	2701	Outflow	0.083	4.55	0.32	9.75	48.831
100yr 24hr 10min Chicago	2800	Outflow	0.083	16.9	0.908	10.083	48.833
100yr 24hr 10min Chicago	2900	Outflow	0.083	17.23	0.788	10.25	48.833
100yr 24hr 10min Chicago	28001	Outflow	0.083	17.23	0.739	10.583	48.832
100yr 24hr 10min Chicago	28000	Outflow	0.083	34.13	1.557	10.333	48.832
100yr 24hr 10min Chicago	23	Outflow	0.083	38.68	1.788	10.25	48.832
100yr 24hr 10min Chicago	27001	Outflow	0.083	38.68	1.778	10.333	48.832
100yr 24hr 10min Chicago	27000	Outflow	0.083	45.06	1.983	10.167	49.189
100yr 24hr 10min Chicago	2601	Outflow	0.083	20.7	1.67	9.667	50.085
100yr 24hr 10min Chicago	22	Outflow	0.083	65.76	3.442	9.833	49.471

100yr 24hr 10min Chicago	26001	Outflow	0.083	65.76	3.277	10	49.463
100yr 24hr 10min Chicago	26000	Outflow	0.083	67.9	3.384	10	49.523
100yr 24hr 10min Chicago	2501	Outflow	0.083	4.86	1.282	9.167	78.593
100yr 24hr 10min Chicago	21	Outflow	0.083	72.76	3.556	9.917	51.465
100yr 24hr 10min Chicago	25001	Outflow	0.083	72.76	3.415	10.167	51.461
100yr 24hr 10min Chicago	2500	Outflow	0.083	4.12	0.997	9.167	71.223
100yr 24hr 10min Chicago	25000	Outflow	0.083	76.88	3.517	10.167	52.52
100yr 24hr 10min Chicago	2401	Outflow	0.083	4.17	1.436	9.167	96.704
100yr 24hr 10min Chicago	20	Outflow	0.083	81.05	3.63	10.167	54.793
100yr 24hr 10min Chicago	24001	Outflow	0.083	81.05	3.613	10.25	54.791
100yr 24hr 10min Chicago	2400	Outflow	0.083	2.47	0.416	9.167	56.211

100yr 24hr 10min Chicago	24000	Outflow	0.083	83.52	3.667	10.167	54.833
100yr 24hr 10min Chicago	24002	Outflow	0.083	83.52	3.665	10.167	54.833
100yr 24hr 10min Chicago	2101	Outflow	0.083	0.04	0.005	9.25	39.384
100yr 24hr 10min Chicago	19	Outflow	0.083	83.56	3.666	10.167	54.826
100yr 24hr 10min Chicago	14	Outflow	0.083	98.34	5.611	9.25	55.786
100yr 24hr 10min Chicago	21001	Outflow	0.083	98.34	5.625	9.333	55.786
100yr 24hr 10min Chicago	2100	Outflow	0.083	0.05	0.022	9.167	94.142
100yr 24hr 10min Chicago	21000	Outflow	0.083	98.39	5.634	9.333	55.806
100yr 24hr 10min Chicago	2001	Outflow	0.083	0.04	0.004	9.333	41.816
100yr 24hr 10min Chicago	13	Outflow	0.083	98.43	5.638	9.333	55.8
100yr 24hr 10min Chicago	20001	Outflow	0.083	98.43	5.655	9.333	55.8

100yr 24hr 10min Chicago	2000	Outflow	0.083	0.04	0.017	9.167	92.437
100yr 24hr 10min Chicago	20000	Outflow	0.083	98.47	5.662	9.333	55.815
100yr 24hr 10min Chicago	1902	Outflow	0.083	3.51	0.907	9.167	73.279
100yr 24hr 10min Chicago	12	Outflow	0.083	101.98	6.281	9.25	56.416
100yr 24hr 10min Chicago	1901	Outflow	0.083	0.07	0.008	9.333	43.968
100yr 24hr 10min Chicago	11	Outflow	0.083	102.05	6.289	9.25	56.408
100yr 24hr 10min Chicago	19001	Outflow	0.083	102.05	6.294	9.333	56.407
100yr 24hr 10min Chicago	1900	Outflow	0.083	0.05	0.022	9.167	93.883
100yr 24hr 10min Chicago	19000	Outflow	0.083	102.1	6.303	9.333	56.426
100yr 24hr 10min Chicago	1802	Outflow	0.083	0.45	0.14	9.167	80.249
100yr 24hr 10min Chicago	10	Outflow	0.083	102.55	6.383	9.333	56.53

100yr 24hr 10min Chicago	1801	Outflow	0.083	0.13	0.055	9.167	93.58
100yr 24hr 10min Chicago	9	Outflow	0.083	102.68	6.406	9.333	56.577
100yr 24hr 10min Chicago	18001	Outflow	0.083	102.68	6.432	9.333	56.577
100yr 24hr 10min Chicago	1800	Outflow	0.083	0.14	0.061	9.167	96.598
100yr 24hr 10min Chicago	18000	Outflow	0.083	102.82	6.457	9.333	56.631
100yr 24hr 10min Chicago	1702	Outflow	0.083	0.07	0.029	9.167	93.207
100yr 24hr 10min Chicago	8	Outflow	0.083	102.89	6.469	9.333	56.656
100yr 24hr 10min Chicago	1701	Outflow	0.083	0.38	0.092	9.167	68.407
100yr 24hr 10min Chicago	7	Outflow	0.083	103.27	6.531	9.333	56.7
100yr 24hr 10min Chicago	17001	Outflow	0.083	103.27	6.544	9.333	56.7
100yr 24hr 10min Chicago	1700	Outflow	0.083	0.12	0.051	9.167	95.01

100yr 24hr 10min Chicago	17000	Outflow	0.083	103.39	6.565	9.333	56.744
100yr 24hr 10min Chicago	1601	Outflow	0.083	0.26	0.097	9.167	89.484
100yr 24hr 10min Chicago	6	Outflow	0.083	103.65	6.615	9.333	56.826
100yr 24hr 10min Chicago	16001	Outflow	0.083	103.65	6.632	9.333	56.826
100yr 24hr 10min Chicago	1600	Outflow	0.083	0.15	0.064	9.167	95.171
100yr 24hr 10min Chicago	16000	Outflow	0.083	103.8	6.658	9.333	56.882
100yr 24hr 10min Chicago	15001	Outflow	0.083	103.8	6.67	9.333	56.881
100yr 24hr 10min Chicago	1500	Outflow	0.083	0.11	0.047	9.167	95.014
100yr 24hr 10min Chicago	15000	Outflow	0.083	103.91	6.69	9.333	56.922
100yr 24hr 10min Chicago	1501	Outflow	0.083	0.56	0.184	9.167	84.333
100yr 24hr 10min Chicago	5	Outflow	0.083	104.47	6.799	9.333	57.069

100yr 24hr 10min Chicago	14001	Outflow	0.083	104.47	6.809	9.333	57.069
100yr 24hr 10min Chicago	1400	Outflow	0.083	0.06	0.026	9.167	94.063
100yr 24hr 10min Chicago	14000	Outflow	0.083	104.53	6.819	9.333	57.09
100yr 24hr 10min Chicago	13001	Outflow	0.083	104.53	6.826	9.333	57.09
100yr 24hr 10min Chicago	1300	Outflow	0.083	0.06	0.026	9.167	94.431
100yr 24hr 10min Chicago	13000	Outflow	0.083	104.59	6.837	9.333	57.111
100yr 24hr 10min Chicago	1201	Outflow	0.083	0.32	0.133	9.167	92.465
100yr 24hr 10min Chicago	4	Outflow	0.083	104.91	6.892	9.333	57.219
100yr 24hr 10min Chicago	12001	Outflow	0.083	104.91	6.904	9.333	57.219
100yr 24hr 10min Chicago	1200	Outflow	0.083	0.24	0.099	9.167	96.049
100yr 24hr 10min Chicago	12000	Outflow	0.083	105.15	6.95	9.333	57.308

100yr 24hr 10min Chicago	1101	Outflow	0.083	0.19	0.081	9.167	94.214
100yr 24hr 10min Chicago	3	Outflow	0.083	105.34	6.983	9.333	57.374
100yr 24hr 10min Chicago	11001	Outflow	0.083	105.34	6.986	9.333	57.374
100yr 24hr 10min Chicago	1100	Outflow	0.083	0.05	0.022	9.167	93.007
100yr 24hr 10min Chicago	11000	Outflow	0.083	105.39	6.994	9.333	57.391
100yr 24hr 10min Chicago	1001	Outflow	0.083	9.07	3.081	9.167	88.882
100yr 24hr 10min Chicago	2	Outflow	0.083	114.46	8.835	9.333	59.886
100yr 24hr 10min Chicago	10001	Outflow	0.083	114.46	8.815	9.333	59.886
100yr 24hr 10min Chicago	1000	Outflow	0.083	0.14	0.059	9.167	94.086
100yr 24hr 10min Chicago	1	Outflow	0.083	114.6	8.839	9.333	59.928

100yr 24hr 10min Chicago	2300	Outflow	0.083	0.23	0.009	9.5	22.871
100yr 24hr 10min Chicago	2202	Outflow	0.083	0.16	0.068	9.167	95.107
100yr 24hr 10min Chicago	2203	Outflow	0.083	0.17	0.074	9.167	96.559
100yr 24hr 10min Chicago	2206	Outflow	0.083	0.33	0.143	9.167	96.894
100yr 24hr 10min Chicago	2207	Outflow	0.083	0.1	0.025	9.167	68.891
100yr 24hr 10min Chicago	2204	Outflow	0.083	11.31	1.639	9.333	56.155
100yr 24hr 10min Chicago	18	Outflow	0.083	11.41	1.655	9.333	56.266
100yr 24hr 10min Chicago	22061	Outflow	0.083	11.41	1.643	9.333	56.258
100yr 24hr 10min Chicago	22060	Outflow	0.083	11.74	1.701	9.333	57.4
100yr 24hr 10min Chicago	2205	Outflow	0.083	0.83	0.346	9.167	93.358
100yr 24hr 10min Chicago	17	Outflow	0.083	12.57	1.846	9.333	59.775

100yr 24hr 10min Chicago	22031	Outflow	0.083	12.57	1.862	9.25	59.772
100yr 24hr 10min Chicago	22030	Outflow	0.083	12.74	1.893	9.25	60.263
100yr 24hr 10min Chicago	2201	Outflow	0.083	1.54	0.365	9.167	68.829
100yr 24hr 10min Chicago	16	Outflow	0.083	14.28	2.184	9.25	61.187
100yr 24hr 10min Chicago	22021	Outflow	0.083	14.28	2.263	9.25	61.185
100yr 24hr 10min Chicago	22020	Outflow	0.083	14.44	2.293	9.25	61.561
100yr 24hr 10min Chicago	15	Outflow	0.083	14.67	2.299	9.25	60.955
100yr 24hr 10min Chicago	22001	Outflow	0.083	14.67	2.317	9.25	60.954
100yr 24hr 10min Chicago	2200	Outflow	0.083	0.11	0.048	9.167	96.435
100yr 24hr 10min Chicago	22000	Outflow	0.083	14.78	2.337	9.25	61.218
100yr 24hr 10min Chicago	2600	Outflow	0.083	2.14	0.207	9.5	51.365

100yr 24hr 10min Chicago	2700	Outflow	0.083	6.38	0.607	9.583	51.366
100yr 24hr 10min Chicago	2701	Outflow	0.083	4.55	0.301	9.833	48.832
100yr 24hr 10min Chicago	2800	Outflow	0.083	16.9	0.846	10.167	48.833
100yr 24hr 10min Chicago	2900	Outflow	0.083	17.23	0.737	10.417	48.833
100yr 24hr 10min Chicago	28001	Outflow	0.083	17.23	0.694	10.667	48.832
100yr 24hr 10min Chicago	28000	Outflow	0.083	34.13	1.463	10.417	48.833
100yr 24hr 10min Chicago	23	Outflow	0.083	38.68	1.68	10.333	48.832
100yr 24hr 10min Chicago	27001	Outflow	0.083	38.68	1.671	10.417	48.832
100yr 24hr 10min Chicago	27000	Outflow	0.083	45.06	1.903	10.167	49.191
100yr 24hr 10min Chicago	2601	Outflow	0.083	20.7	1.46	9.75	50.086
100yr 24hr 10min Chicago	22	Outflow	0.083	65.76	3.235	9.917	49.473

100yr 24hr 10min Chicago	26001	Outflow	0.083	65.76	3.108	10.167	49.465
100yr 24hr 10min Chicago	26000	Outflow	0.083	67.9	3.205	10.167	49.525
100yr 24hr 10min Chicago	2501	Outflow	0.083	4.86	1.282	9.167	78.593
100yr 24hr 10min Chicago	21	Outflow	0.083	72.76	3.346	10.083	51.467
100yr 24hr 10min Chicago	25001	Outflow	0.083	72.76	3.236	10.333	51.463
100yr 24hr 10min Chicago	2500	Outflow	0.083	4.12	0.997	9.167	71.223
100yr 24hr 10min Chicago	25000	Outflow	0.083	76.88	3.318	10.333	52.522
100yr 24hr 10min Chicago	2401	Outflow	0.083	4.17	1.436	9.167	96.704
100yr 24hr 10min Chicago	20	Outflow	0.083	81.05	3.416	10.25	54.795
100yr 24hr 10min Chicago	24001	Outflow	0.083	81.05	3.398	10.333	54.793
100yr 24hr 10min Chicago	2400	Outflow	0.083	2.47	0.416	9.167	56.211

100yr 24hr 10min Chicago	24000	Outflow	0.083	83.52	3.441	10.333	54.835
100yr 24hr 10min Chicago	24002	Outflow	0.083	83.52	3.44	10.333	54.835
100yr 24hr 10min Chicago	2101	Outflow	0.083	0.04	0.005	9.25	39.544
100yr 24hr 10min Chicago	19	Outflow	0.083	83.56	3.441	10.333	54.828
100yr 24hr 10min Chicago	14	Outflow	0.083	98.34	5.558	9.25	55.788
100yr 24hr 10min Chicago	21001	Outflow	0.083	98.34	5.525	9.25	55.788
100yr 24hr 10min Chicago	2100	Outflow	0.083	0.05	0.022	9.167	94.142
100yr 24hr 10min Chicago	21000	Outflow	0.083	98.39	5.534	9.25	55.808
100yr 24hr 10min Chicago	2001	Outflow	0.083	0.04	0.004	9.333	41.824
100yr 24hr 10min Chicago	13	Outflow	0.083	98.43	5.538	9.25	55.802
100yr 24hr 10min Chicago	20001	Outflow	0.083	98.43	5.512	9.25	55.802

100yr 24hr 10min Chicago	2000	Outflow	0.083	0.04	0.017	9.167	92.437
100yr 24hr 10min Chicago	20000	Outflow	0.083	98.47	5.52	9.25	55.817
100yr 24hr 10min Chicago	1902	Outflow	0.083	3.51	0.907	9.167	73.279
100yr 24hr 10min Chicago	12	Outflow	0.083	101.98	6.231	9.25	56.418
100yr 24hr 10min Chicago	1901	Outflow	0.083	0.07	0.008	9.333	44.012
100yr 24hr 10min Chicago	11	Outflow	0.083	102.05	6.238	9.25	56.409
100yr 24hr 10min Chicago	19001	Outflow	0.083	102.05	6.216	9.25	56.409
100yr 24hr 10min Chicago	1900	Outflow	0.083	0.05	0.022	9.167	93.883
100yr 24hr 10min Chicago	19000	Outflow	0.083	102.1	6.225	9.25	56.427
100yr 24hr 10min Chicago	1802	Outflow	0.083	0.45	0.14	9.167	80.249
100yr 24hr 10min Chicago	10	Outflow	0.083	102.55	6.318	9.25	56.532

100yr 24hr 10min Chicago	1801	Outflow	0.083	0.13	0.055	9.167	93.58
100yr 24hr 10min Chicago	9	Outflow	0.083	102.68	6.342	9.25	56.579
100yr 24hr 10min Chicago	18001	Outflow	0.083	102.68	6.301	9.333	56.579
100yr 24hr 10min Chicago	1800	Outflow	0.083	0.14	0.061	9.167	96.598
100yr 24hr 10min Chicago	18000	Outflow	0.083	102.82	6.325	9.333	56.633
100yr 24hr 10min Chicago	1702	Outflow	0.083	0.07	0.029	9.167	93.207
100yr 24hr 10min Chicago	8	Outflow	0.083	102.89	6.337	9.333	56.658
100yr 24hr 10min Chicago	1701	Outflow	0.083	0.38	0.092	9.167	68.407
100yr 24hr 10min Chicago	7	Outflow	0.083	103.27	6.399	9.333	56.701
100yr 24hr 10min Chicago	17001	Outflow	0.083	103.27	6.424	9.333	56.701
100yr 24hr 10min Chicago	1700	Outflow	0.083	0.12	0.051	9.167	95.01

100yr 24hr 10min Chicago	17000	Outflow	0.083	103.39	6.445	9.333	56.746
100yr 24hr 10min Chicago	1601	Outflow	0.083	0.26	0.097	9.167	89.484
100yr 24hr 10min Chicago	6	Outflow	0.083	103.65	6.495	9.333	56.828
100yr 24hr 10min Chicago	16001	Outflow	0.083	103.65	6.522	9.333	56.828
100yr 24hr 10min Chicago	1600	Outflow	0.083	0.15	0.064	9.167	95.171
100yr 24hr 10min Chicago	16000	Outflow	0.083	103.8	6.548	9.333	56.883
100yr 24hr 10min Chicago	15001	Outflow	0.083	103.8	6.568	9.333	56.883
100yr 24hr 10min Chicago	1500	Outflow	0.083	0.11	0.047	9.167	95.014
100yr 24hr 10min Chicago	15000	Outflow	0.083	103.91	6.588	9.333	56.923
100yr 24hr 10min Chicago	1501	Outflow	0.083	0.56	0.184	9.167	84.333
100yr 24hr 10min Chicago	5	Outflow	0.083	104.47	6.697	9.333	57.07

100yr 24hr 10min Chicago	14001	Outflow	0.083	104.47	6.711	9.333	57.07
100yr 24hr 10min Chicago	1400	Outflow	0.083	0.06	0.026	9.167	94.063
100yr 24hr 10min Chicago	14000	Outflow	0.083	104.53	6.722	9.333	57.091
100yr 24hr 10min Chicago	13001	Outflow	0.083	104.53	6.732	9.333	57.091
100yr 24hr 10min Chicago	1300	Outflow	0.083	0.06	0.026	9.167	94.431
100yr 24hr 10min Chicago	13000	Outflow	0.083	104.59	6.743	9.333	57.113
100yr 24hr 10min Chicago	1201	Outflow	0.083	0.32	0.133	9.167	92.465
100yr 24hr 10min Chicago	4	Outflow	0.083	104.91	6.799	9.333	57.221
100yr 24hr 10min Chicago	12001	Outflow	0.083	104.91	6.823	9.333	57.22
100yr 24hr 10min Chicago	1200	Outflow	0.083	0.24	0.099	9.167	96.049
100yr 24hr 10min Chicago	12000	Outflow	0.083	105.15	6.868	9.333	57.309

100yr 24hr 10min Chicago	1101	Outflow	0.083	0.19	0.081	9.167	94.214
100yr 24hr 10min Chicago	3	Outflow	0.083	105.34	6.902	9.333	57.376
100yr 24hr 10min Chicago	11001	Outflow	0.083	105.34	6.907	9.333	57.376
100yr 24hr 10min Chicago	1100	Outflow	0.083	0.05	0.022	9.167	93.007
100yr 24hr 10min Chicago	11000	Outflow	0.083	105.39	6.915	9.333	57.392
100yr 24hr 10min Chicago	1001	Outflow	0.083	9.07	3.081	9.167	88.882
100yr 24hr 10min Chicago	2	Outflow	0.083	114.46	8.756	9.333	59.888
100yr 24hr 10min Chicago	10001	Outflow	0.083	114.46	8.744	9.333	59.888
100yr 24hr 10min Chicago	1000	Outflow	0.083	0.14	0.059	9.167	94.086
100yr 24hr 10min Chicago	1	Outflow	0.083	114.6	8.768	9.333	59.929

100yr 24hr 10min Chicago	2300	Outflow	0.083	0.23	0.012	9.417	22.852
100yr 24hr 10min Chicago	2202	Outflow	0.083	0.16	0.068	9.167	95.107
100yr 24hr 10min Chicago	2203	Outflow	0.083	0.17	0.074	9.167	96.559
100yr 24hr 10min Chicago	2206	Outflow	0.083	0.33	0.143	9.167	96.894
100yr 24hr 10min Chicago	2207	Outflow	0.083	0.1	0.025	9.167	68.891
100yr 24hr 10min Chicago	2204	Outflow	0.083	11.31	1.639	9.333	56.155
100yr 24hr 10min Chicago	18	Outflow	0.083	11.41	1.655	9.333	56.266
100yr 24hr 10min Chicago	22061	Outflow	0.083	11.41	1.643	9.333	56.258
100yr 24hr 10min Chicago	22060	Outflow	0.083	11.74	1.701	9.333	57.4
100yr 24hr 10min Chicago	2205	Outflow	0.083	0.83	0.346	9.167	93.358
100yr 24hr 10min Chicago	17	Outflow	0.083	12.57	1.846	9.333	59.775

100yr 24hr 10min Chicago	22031	Outflow	0.083	12.57	1.862	9.25	59.772
100yr 24hr 10min Chicago	22030	Outflow	0.083	12.74	1.893	9.25	60.263
100yr 24hr 10min Chicago	2201	Outflow	0.083	1.54	0.365	9.167	68.829
100yr 24hr 10min Chicago	16	Outflow	0.083	14.28	2.184	9.25	61.187
100yr 24hr 10min Chicago	22021	Outflow	0.083	14.28	2.263	9.25	61.185
100yr 24hr 10min Chicago	22020	Outflow	0.083	14.44	2.293	9.25	61.561
100yr 24hr 10min Chicago	15	Outflow	0.083	14.67	2.303	9.25	60.954
100yr 24hr 10min Chicago	22001	Outflow	0.083	14.67	2.322	9.25	60.953
100yr 24hr 10min Chicago	2200	Outflow	0.083	0.11	0.048	9.167	96.435
100yr 24hr 10min Chicago	22000	Outflow	0.083	14.78	2.342	9.25	61.218
100yr 24hr 10min Chicago	2600	Outflow	0.083	2.14	0.295	9.333	51.276

100yr 24hr 10min Chicago	2700	Outflow	0.083	6.38	0.881	9.333	51.276
100yr 24hr 10min Chicago	2701	Outflow	0.083	4.55	0.402	9.583	48.826
100yr 24hr 10min Chicago	2800	Outflow	0.083	16.9	1.158	9.75	48.831
100yr 24hr 10min Chicago	2900	Outflow	0.083	17.23	1.01	9.917	48.832
100yr 24hr 10min Chicago	28001	Outflow	0.083	17.23	0.936	10.167	48.831
100yr 24hr 10min Chicago	28000	Outflow	0.083	34.13	1.956	10	48.831
100yr 24hr 10min Chicago	23	Outflow	0.083	38.68	2.241	9.917	48.831
100yr 24hr 10min Chicago	27001	Outflow	0.083	38.68	2.223	10	48.829
100yr 24hr 10min Chicago	27000	Outflow	0.083	45.06	2.453	9.917	49.175
100yr 24hr 10min Chicago	2601	Outflow	0.083	20.7	2.163	9.5	50.071
100yr 24hr 10min Chicago	22	Outflow	0.083	65.76	4.254	9.583	49.457

100yr 24hr 10min Chicago	26001	Outflow	0.083	65.76	3.823	9.833	49.45
100yr 24hr 10min Chicago	26000	Outflow	0.083	67.9	3.926	9.833	49.507
100yr 24hr 10min Chicago	2501	Outflow	0.083	4.86	1.282	9.167	78.593
100yr 24hr 10min Chicago	21	Outflow	0.083	72.76	4.176	9.75	51.45
100yr 24hr 10min Chicago	25001	Outflow	0.083	72.76	3.969	10	51.446
100yr 24hr 10min Chicago	2500	Outflow	0.083	4.12	0.997	9.167	71.223
100yr 24hr 10min Chicago	25000	Outflow	0.083	76.88	4.1	10	52.506
100yr 24hr 10min Chicago	2401	Outflow	0.083	4.17	1.436	9.167	96.704
100yr 24hr 10min Chicago	20	Outflow	0.083	81.05	4.257	9.917	54.78
100yr 24hr 10min Chicago	24001	Outflow	0.083	81.05	4.239	10	54.778
100yr 24hr 10min Chicago	2400	Outflow	0.083	2.47	0.416	9.167	56.211

100yr 24hr 10min Chicago	24000	Outflow	0.083	83.52	4.31	10	54.82
100yr 24hr 10min Chicago	24002	Outflow	0.083	83.52	4.31	10	54.82
100yr 24hr 10min Chicago	2101	Outflow	0.083	0.04	0.006	9.167	38.745
100yr 24hr 10min Chicago	19	Outflow	0.083	83.56	4.31	10	54.813
100yr 24hr 10min Chicago	14	Outflow	0.083	98.34	5.947	9.417	55.775
100yr 24hr 10min Chicago	21001	Outflow	0.083	98.34	5.96	9.333	55.775
100yr 24hr 10min Chicago	2100	Outflow	0.083	0.05	0.022	9.167	94.142
100yr 24hr 10min Chicago	21000	Outflow	0.083	98.39	5.969	9.333	55.795
100yr 24hr 10min Chicago	2001	Outflow	0.083	0.04	0.005	9.25	41.647
100yr 24hr 10min Chicago	13	Outflow	0.083	98.43	5.974	9.333	55.789
100yr 24hr 10min Chicago	20001	Outflow	0.083	98.43	5.985	9.333	55.789

100yr 24hr 10min Chicago	2000	Outflow	0.083	0.04	0.017	9.167	92.437
100yr 24hr 10min Chicago	20000	Outflow	0.083	98.47	5.992	9.333	55.804
100yr 24hr 10min Chicago	1902	Outflow	0.083	3.51	0.907	9.167	73.279
100yr 24hr 10min Chicago	12	Outflow	0.083	101.98	6.594	9.333	56.405
100yr 24hr 10min Chicago	1901	Outflow	0.083	0.07	0.01	9.25	43.661
100yr 24hr 10min Chicago	11	Outflow	0.083	102.05	6.603	9.333	56.396
100yr 24hr 10min Chicago	19001	Outflow	0.083	102.05	6.616	9.333	56.396
100yr 24hr 10min Chicago	1900	Outflow	0.083	0.05	0.022	9.167	93.883
100yr 24hr 10min Chicago	19000	Outflow	0.083	102.1	6.625	9.333	56.415
100yr 24hr 10min Chicago	1802	Outflow	0.083	0.45	0.14	9.167	80.249
100yr 24hr 10min Chicago	10	Outflow	0.083	102.55	6.706	9.333	56.519

100yr 24hr 10min Chicago	1801	Outflow	0.083	0.13	0.055	9.167	93.58
100yr 24hr 10min Chicago	9	Outflow	0.083	102.68	6.728	9.333	56.566
100yr 24hr 10min Chicago	18001	Outflow	0.083	102.68	6.734	9.333	56.566
100yr 24hr 10min Chicago	1800	Outflow	0.083	0.14	0.061	9.167	96.598
100yr 24hr 10min Chicago	18000	Outflow	0.083	102.82	6.758	9.333	56.621
100yr 24hr 10min Chicago	1702	Outflow	0.083	0.07	0.029	9.167	93.207
100yr 24hr 10min Chicago	8	Outflow	0.083	102.89	6.771	9.333	56.646
100yr 24hr 10min Chicago	1701	Outflow	0.083	0.38	0.092	9.167	68.407
100yr 24hr 10min Chicago	7	Outflow	0.083	103.27	6.833	9.333	56.689
100yr 24hr 10min Chicago	17001	Outflow	0.083	103.27	6.835	9.333	56.689
100yr 24hr 10min Chicago	1700	Outflow	0.083	0.12	0.051	9.167	95.01

100yr 24hr 10min Chicago	17000	Outflow	0.083	103.39	6.857	9.333	56.733
100yr 24hr 10min Chicago	1601	Outflow	0.083	0.26	0.097	9.167	89.484
100yr 24hr 10min Chicago	6	Outflow	0.083	103.65	6.906	9.333	56.815
100yr 24hr 10min Chicago	16001	Outflow	0.083	103.65	6.911	9.333	56.815
100yr 24hr 10min Chicago	1600	Outflow	0.083	0.15	0.064	9.167	95.171
100yr 24hr 10min Chicago	16000	Outflow	0.083	103.8	6.937	9.333	56.871
100yr 24hr 10min Chicago	15001	Outflow	0.083	103.8	6.941	9.333	56.871
100yr 24hr 10min Chicago	1500	Outflow	0.083	0.11	0.047	9.167	95.014
100yr 24hr 10min Chicago	15000	Outflow	0.083	103.91	6.961	9.333	56.911
100yr 24hr 10min Chicago	1501	Outflow	0.083	0.56	0.184	9.167	84.333
100yr 24hr 10min Chicago	5	Outflow	0.083	104.47	7.07	9.333	57.058

100yr 24hr 10min Chicago	14001	Outflow	0.083	104.47	7.074	9.333	57.058
100yr 24hr 10min Chicago	1400	Outflow	0.083	0.06	0.026	9.167	94.063
100yr 24hr 10min Chicago	14000	Outflow	0.083	104.53	7.085	9.333	57.079
100yr 24hr 10min Chicago	13001	Outflow	0.083	104.53	7.087	9.333	57.079
100yr 24hr 10min Chicago	1300	Outflow	0.083	0.06	0.026	9.167	94.431
100yr 24hr 10min Chicago	13000	Outflow	0.083	104.59	7.098	9.333	57.101
100yr 24hr 10min Chicago	1201	Outflow	0.083	0.32	0.133	9.167	92.465
100yr 24hr 10min Chicago	4	Outflow	0.083	104.91	7.153	9.333	57.208
100yr 24hr 10min Chicago	12001	Outflow	0.083	104.91	7.148	9.333	57.208
100yr 24hr 10min Chicago	1200	Outflow	0.083	0.24	0.099	9.167	96.049
100yr 24hr 10min Chicago	12000	Outflow	0.083	105.15	7.193	9.333	57.297

100yr 24hr 10min Chicago	1101	Outflow	0.083	0.19	0.081	9.167	94.214
100yr 24hr 10min Chicago	3	Outflow	0.083	105.34	7.227	9.333	57.363
100yr 24hr 10min Chicago	11001	Outflow	0.083	105.34	7.225	9.333	57.363
100yr 24hr 10min Chicago	1100	Outflow	0.083	0.05	0.022	9.167	93.007
100yr 24hr 10min Chicago	11000	Outflow	0.083	105.39	7.234	9.333	57.38
100yr 24hr 10min Chicago	1001	Outflow	0.083	9.07	3.081	9.167	88.882
100yr 24hr 10min Chicago	2	Outflow	0.083	114.46	9.075	9.333	59.877
100yr 24hr 10min Chicago	10001	Outflow	0.083	114.46	9.042	9.333	59.876
100yr 24hr 10min Chicago	1000	Outflow	0.083	0.14	0.059	9.167	94.086
100yr 24hr 10min Chicago	1	Outflow	0.083	114.6	9.066	9.333	59.918

100yr 24hr 10min Chicago	2300	Outflow	0.083	0.23	0.01	9.5	22.866
100yr 24hr 10min Chicago	2202	Outflow	0.083	0.16	0.068	9.167	94.287
100yr 24hr 10min Chicago	2203	Outflow	0.083	0.17	0.074	9.167	95.699
100yr 24hr 10min Chicago	2206	Outflow	0.083	0.33	0.143	9.167	95.994
100yr 24hr 10min Chicago	2207	Outflow	0.083	0.1	0.025	9.167	68.611
100yr 24hr 10min Chicago	2204	Outflow	0.083	11.31	1.639	9.333	56.035
100yr 24hr 10min Chicago	18	Outflow	0.083	11.41	1.655	9.333	56.145
100yr 24hr 10min Chicago	22061	Outflow	0.083	11.41	1.643	9.333	56.137
100yr 24hr 10min Chicago	22060	Outflow	0.083	11.74	1.701	9.333	57.257
100yr 24hr 10min Chicago	2205	Outflow	0.083	0.83	0.346	9.167	92.538
100yr 24hr 10min Chicago	17	Outflow	0.083	12.57	1.846	9.333	59.587

100yr 24hr 10min Chicago	22031	Outflow	0.083	12.57	1.862	9.25	59.584
100yr 24hr 10min Chicago	22030	Outflow	0.083	12.74	1.893	9.25	60.066
100yr 24hr 10min Chicago	2201	Outflow	0.083	1.54	0.365	9.167	68.549
100yr 24hr 10min Chicago	16	Outflow	0.083	14.28	2.184	9.25	60.981
100yr 24hr 10min Chicago	22021	Outflow	0.083	14.28	2.263	9.25	60.979
100yr 24hr 10min Chicago	22020	Outflow	0.083	14.44	2.293	9.25	61.348
100yr 24hr 10min Chicago	15	Outflow	0.083	14.67	2.301	9.25	60.745
100yr 24hr 10min Chicago	22001	Outflow	0.083	14.67	2.319	9.25	60.744
100yr 24hr 10min Chicago	2200	Outflow	0.083	0.11	0.048	9.167	95.575
100yr 24hr 10min Chicago	22000	Outflow	0.083	14.78	2.339	9.25	61.004
100yr 24hr 10min Chicago	2600	Outflow	0.083	2.14	0.246	9.417	51.347

100yr 24hr 10min Chicago	2700	Outflow	0.083	6.38	0.717	9.417	51.351
100yr 24hr 10min Chicago	2701	Outflow	0.083	4.55	0.341	9.667	48.83
100yr 24hr 10min Chicago	2800	Outflow	0.083	16.9	0.971	10	48.832
100yr 24hr 10min Chicago	2900	Outflow	0.083	17.23	0.848	10.167	48.833
100yr 24hr 10min Chicago	28001	Outflow	0.083	17.23	0.791	10.417	48.832
100yr 24hr 10min Chicago	28000	Outflow	0.083	34.13	1.663	10.25	48.832
100yr 24hr 10min Chicago	23	Outflow	0.083	38.68	1.907	10.167	48.832
100yr 24hr 10min Chicago	27001	Outflow	0.083	38.68	1.896	10.25	48.831
100yr 24hr 10min Chicago	27000	Outflow	0.083	45.06	2.13	10.083	49.188
100yr 24hr 10min Chicago	2601	Outflow	0.083	20.7	1.737	9.583	50.084
100yr 24hr 10min Chicago	22	Outflow	0.083	65.76	3.662	9.75	49.47

100yr 24hr 10min Chicago	26001	Outflow	0.083	65.76	3.446	10	49.462
100yr 24hr 10min Chicago	26000	Outflow	0.083	67.9	3.545	10	49.522
100yr 24hr 10min Chicago	2501	Outflow	0.083	4.86	1.282	9.167	78.413
100yr 24hr 10min Chicago	21	Outflow	0.083	72.76	3.73	9.917	51.452
100yr 24hr 10min Chicago	25001	Outflow	0.083	72.76	3.567	10.167	51.448
100yr 24hr 10min Chicago	2500	Outflow	0.083	4.12	0.997	9.167	70.923
100yr 24hr 10min Chicago	25000	Outflow	0.083	76.88	3.668	10.167	52.491
100yr 24hr 10min Chicago	2401	Outflow	0.083	4.17	1.436	9.167	96.414
100yr 24hr 10min Chicago	20	Outflow	0.083	81.05	3.785	10.083	54.751
100yr 24hr 10min Chicago	24001	Outflow	0.083	81.05	3.771	10.167	54.749
100yr 24hr 10min Chicago	2400	Outflow	0.083	2.47	0.416	9.167	56.061

100yr 24hr 10min Chicago	24000	Outflow	0.083	83.52	3.825	10.167	54.788
100yr 24hr 10min Chicago	24002	Outflow	0.083	83.52	3.824	10.167	54.788
100yr 24hr 10min Chicago	2101	Outflow	0.083	0.04	0.005	9.25	39.249
100yr 24hr 10min Chicago	19	Outflow	0.083	83.56	3.825	10.167	54.781
100yr 24hr 10min Chicago	14	Outflow	0.083	98.34	5.634	9.333	55.716
100yr 24hr 10min Chicago	21001	Outflow	0.083	98.34	5.662	9.333	55.716
100yr 24hr 10min Chicago	2100	Outflow	0.083	0.05	0.022	9.167	93.252
100yr 24hr 10min Chicago	21000	Outflow	0.083	98.39	5.67	9.333	55.735
100yr 24hr 10min Chicago	2001	Outflow	0.083	0.04	0.004	9.333	41.781
100yr 24hr 10min Chicago	13	Outflow	0.083	98.43	5.675	9.333	55.729
100yr 24hr 10min Chicago	20001	Outflow	0.083	98.43	5.691	9.333	55.729

100yr 24hr 10min Chicago	2000	Outflow	0.083	0.04	0.017	9.167	91.547
100yr 24hr 10min Chicago	20000	Outflow	0.083	98.47	5.698	9.333	55.744
100yr 24hr 10min Chicago	1902	Outflow	0.083	3.51	0.907	9.167	72.939
100yr 24hr 10min Chicago	12	Outflow	0.083	101.98	6.301	9.25	56.336
100yr 24hr 10min Chicago	1901	Outflow	0.083	0.07	0.009	9.333	43.939
100yr 24hr 10min Chicago	11	Outflow	0.083	102.05	6.31	9.25	56.327
100yr 24hr 10min Chicago	19001	Outflow	0.083	102.05	6.329	9.333	56.327
100yr 24hr 10min Chicago	1900	Outflow	0.083	0.05	0.022	9.167	93.003
100yr 24hr 10min Chicago	19000	Outflow	0.083	102.1	6.337	9.333	56.345
100yr 24hr 10min Chicago	1802	Outflow	0.083	0.45	0.14	9.167	79.789
100yr 24hr 10min Chicago	10	Outflow	0.083	102.55	6.418	9.333	56.448

100yr 24hr 10min Chicago	1801	Outflow	0.083	0.13	0.055	9.167	92.75
100yr 24hr 10min Chicago	9	Outflow	0.083	102.68	6.441	9.333	56.494
100yr 24hr 10min Chicago	18001	Outflow	0.083	102.68	6.464	9.333	56.494
100yr 24hr 10min Chicago	1800	Outflow	0.083	0.14	0.061	9.167	95.708
100yr 24hr 10min Chicago	18000	Outflow	0.083	102.82	6.489	9.333	56.547
100yr 24hr 10min Chicago	1702	Outflow	0.083	0.07	0.029	9.167	92.407
100yr 24hr 10min Chicago	8	Outflow	0.083	102.89	6.501	9.333	56.571
100yr 24hr 10min Chicago	1701	Outflow	0.083	0.38	0.092	9.167	68.137
100yr 24hr 10min Chicago	7	Outflow	0.083	103.27	6.563	9.333	56.614
100yr 24hr 10min Chicago	17001	Outflow	0.083	103.27	6.575	9.333	56.614
100yr 24hr 10min Chicago	1700	Outflow	0.083	0.12	0.051	9.167	94.2

100yr 24hr 10min Chicago	17000	Outflow	0.083	103.39	6.596	9.333	56.657
100yr 24hr 10min Chicago	1601	Outflow	0.083	0.26	0.097	9.167	88.924
100yr 24hr 10min Chicago	6	Outflow	0.083	103.65	6.646	9.333	56.738
100yr 24hr 10min Chicago	16001	Outflow	0.083	103.65	6.661	9.333	56.738
100yr 24hr 10min Chicago	1600	Outflow	0.083	0.15	0.064	9.167	94.321
100yr 24hr 10min Chicago	16000	Outflow	0.083	103.8	6.687	9.333	56.793
100yr 24hr 10min Chicago	15001	Outflow	0.083	103.8	6.698	9.333	56.793
100yr 24hr 10min Chicago	1500	Outflow	0.083	0.11	0.047	9.167	94.194
100yr 24hr 10min Chicago	15000	Outflow	0.083	103.91	6.718	9.333	56.832
100yr 24hr 10min Chicago	1501	Outflow	0.083	0.56	0.184	9.167	83.933
100yr 24hr 10min Chicago	5	Outflow	0.083	104.47	6.827	9.333	56.977

100yr 24hr 10min Chicago	14001	Outflow	0.083	104.47	6.836	9.333	56.977
100yr 24hr 10min Chicago	1400	Outflow	0.083	0.06	0.026	9.167	93.213
100yr 24hr 10min Chicago	14000	Outflow	0.083	104.53	6.846	9.333	56.998
100yr 24hr 10min Chicago	13001	Outflow	0.083	104.53	6.853	9.333	56.998
100yr 24hr 10min Chicago	1300	Outflow	0.083	0.06	0.026	9.167	93.551
100yr 24hr 10min Chicago	13000	Outflow	0.083	104.59	6.863	9.333	57.019
100yr 24hr 10min Chicago	1201	Outflow	0.083	0.32	0.133	9.167	91.685
100yr 24hr 10min Chicago	4	Outflow	0.083	104.91	6.919	9.333	57.125
100yr 24hr 10min Chicago	12001	Outflow	0.083	104.91	6.929	9.333	57.125
100yr 24hr 10min Chicago	1200	Outflow	0.083	0.24	0.099	9.167	95.659
100yr 24hr 10min Chicago	12000	Outflow	0.083	105.15	6.975	9.333	57.213

100yr 24hr 10min Chicago	1101	Outflow	0.083	0.19	0.081	9.167	93.384
100yr 24hr 10min Chicago	3	Outflow	0.083	105.34	7.008	9.333	57.278
100yr 24hr 10min Chicago	11001	Outflow	0.083	105.34	7.01	9.333	57.278
100yr 24hr 10min Chicago	1100	Outflow	0.083	0.05	0.022	9.167	92.127
100yr 24hr 10min Chicago	11000	Outflow	0.083	105.39	7.018	9.333	57.294
100yr 24hr 10min Chicago	1001	Outflow	0.083	9.07	3.081	9.167	88.342
100yr 24hr 10min Chicago	2	Outflow	0.083	114.46	8.859	9.333	59.755
100yr 24hr 10min Chicago	10001	Outflow	0.083	114.46	8.837	9.333	59.754
100yr 24hr 10min Chicago	1000	Outflow	0.083	0.14	0.059	9.167	93.306
100yr 24hr 10min Chicago	1	Outflow	0.083	114.6	8.862	9.333	59.795

100yr 24hr 10min Chicago	2300	Outflow	0.083	0.23	0.01	9.5	22.866
100yr 24hr 10min Chicago	2202	Outflow	0.083	0.16	0.068	9.167	95.927
100yr 24hr 10min Chicago	2203	Outflow	0.083	0.17	0.074	9.167	97.419
100yr 24hr 10min Chicago	2206	Outflow	0.083	0.33	0.143	9.167	97.794
100yr 24hr 10min Chicago	2207	Outflow	0.083	0.1	0.025	9.167	69.171
100yr 24hr 10min Chicago	2204	Outflow	0.083	11.31	1.639	9.333	56.275
100yr 24hr 10min Chicago	18	Outflow	0.083	11.41	1.655	9.333	56.388
100yr 24hr 10min Chicago	22061	Outflow	0.083	11.41	1.643	9.333	56.379
100yr 24hr 10min Chicago	22060	Outflow	0.083	11.74	1.701	9.333	57.544
100yr 24hr 10min Chicago	2205	Outflow	0.083	0.83	0.346	9.167	94.178
100yr 24hr 10min Chicago	17	Outflow	0.083	12.57	1.846	9.333	59.963

100yr 24hr 10min Chicago	22031	Outflow	0.083	12.57	1.862	9.25	59.96
100yr 24hr 10min Chicago	22030	Outflow	0.083	12.74	1.893	9.25	60.46
100yr 24hr 10min Chicago	2201	Outflow	0.083	1.54	0.365	9.167	69.109
100yr 24hr 10min Chicago	16	Outflow	0.083	14.28	2.184	9.25	61.392
100yr 24hr 10min Chicago	22021	Outflow	0.083	14.28	2.263	9.25	61.391
100yr 24hr 10min Chicago	22020	Outflow	0.083	14.44	2.293	9.25	61.774
100yr 24hr 10min Chicago	15	Outflow	0.083	14.67	2.301	9.25	61.164
100yr 24hr 10min Chicago	22001	Outflow	0.083	14.67	2.319	9.25	61.163
100yr 24hr 10min Chicago	2200	Outflow	0.083	0.11	0.048	9.167	97.295
100yr 24hr 10min Chicago	22000	Outflow	0.083	14.78	2.339	9.25	61.432
100yr 24hr 10min Chicago	2600	Outflow	0.083	2.14	0.246	9.417	51.347

100yr 24hr 10min Chicago	2700	Outflow	0.083	6.38	0.717	9.417	51.351
100yr 24hr 10min Chicago	2701	Outflow	0.083	4.55	0.341	9.667	48.83
100yr 24hr 10min Chicago	2800	Outflow	0.083	16.9	0.971	10	48.832
100yr 24hr 10min Chicago	2900	Outflow	0.083	17.23	0.848	10.167	48.833
100yr 24hr 10min Chicago	28001	Outflow	0.083	17.23	0.791	10.417	48.832
100yr 24hr 10min Chicago	28000	Outflow	0.083	34.13	1.663	10.25	48.832
100yr 24hr 10min Chicago	23	Outflow	0.083	38.68	1.907	10.167	48.832
100yr 24hr 10min Chicago	27001	Outflow	0.083	38.68	1.896	10.25	48.831
100yr 24hr 10min Chicago	27000	Outflow	0.083	45.06	2.13	10.083	49.188
100yr 24hr 10min Chicago	2601	Outflow	0.083	20.7	1.737	9.583	50.084
100yr 24hr 10min Chicago	22	Outflow	0.083	65.76	3.662	9.75	49.47

100yr 24hr 10min Chicago	26001	Outflow	0.083	65.76	3.446	10	49.462
100yr 24hr 10min Chicago	26000	Outflow	0.083	67.9	3.545	10	49.522
100yr 24hr 10min Chicago	2501	Outflow	0.083	4.86	1.282	9.167	78.773
100yr 24hr 10min Chicago	21	Outflow	0.083	72.76	3.73	9.917	51.476
100yr 24hr 10min Chicago	25001	Outflow	0.083	72.76	3.567	10.167	51.472
100yr 24hr 10min Chicago	2500	Outflow	0.083	4.12	0.997	9.167	71.523
100yr 24hr 10min Chicago	25000	Outflow	0.083	76.88	3.668	10.167	52.546
100yr 24hr 10min Chicago	2401	Outflow	0.083	4.17	1.436	9.167	96.994
100yr 24hr 10min Chicago	20	Outflow	0.083	81.05	3.785	10.083	54.833
100yr 24hr 10min Chicago	24001	Outflow	0.083	81.05	3.771	10.167	54.831
100yr 24hr 10min Chicago	2400	Outflow	0.083	2.47	0.416	9.167	56.361

100yr 24hr 10min Chicago	24000	Outflow	0.083	83.52	3.825	10.167	54.877
100yr 24hr 10min Chicago	24002	Outflow	0.083	83.52	3.824	10.167	54.877
100yr 24hr 10min Chicago	2101	Outflow	0.083	0.04	0.005	9.25	39.249
100yr 24hr 10min Chicago	19	Outflow	0.083	83.56	3.825	10.167	54.869
100yr 24hr 10min Chicago	14	Outflow	0.083	98.34	5.634	9.333	55.855
100yr 24hr 10min Chicago	21001	Outflow	0.083	98.34	5.662	9.333	55.855
100yr 24hr 10min Chicago	2100	Outflow	0.083	0.05	0.022	9.167	95.032
100yr 24hr 10min Chicago	21000	Outflow	0.083	98.39	5.67	9.333	55.875
100yr 24hr 10min Chicago	2001	Outflow	0.083	0.04	0.004	9.333	41.781
100yr 24hr 10min Chicago	13	Outflow	0.083	98.43	5.675	9.333	55.87
100yr 24hr 10min Chicago	20001	Outflow	0.083	98.43	5.691	9.333	55.869

100yr 24hr 10min Chicago	2000	Outflow	0.083	0.04	0.017	9.167	93.327
100yr 24hr 10min Chicago	20000	Outflow	0.083	98.47	5.698	9.333	55.885
100yr 24hr 10min Chicago	1902	Outflow	0.083	3.51	0.907	9.167	73.619
100yr 24hr 10min Chicago	12	Outflow	0.083	101.98	6.301	9.25	56.495
100yr 24hr 10min Chicago	1901	Outflow	0.083	0.07	0.009	9.333	43.939
100yr 24hr 10min Chicago	11	Outflow	0.083	102.05	6.31	9.25	56.486
100yr 24hr 10min Chicago	19001	Outflow	0.083	102.05	6.329	9.333	56.486
100yr 24hr 10min Chicago	1900	Outflow	0.083	0.05	0.022	9.167	94.763
100yr 24hr 10min Chicago	19000	Outflow	0.083	102.1	6.337	9.333	56.505
100yr 24hr 10min Chicago	1802	Outflow	0.083	0.45	0.14	9.167	80.709
100yr 24hr 10min Chicago	10	Outflow	0.083	102.55	6.418	9.333	56.611

100yr 24hr 10min Chicago	1801	Outflow	0.083	0.13	0.055	9.167	94.41
100yr 24hr 10min Chicago	9	Outflow	0.083	102.68	6.441	9.333	56.659
100yr 24hr 10min Chicago	18001	Outflow	0.083	102.68	6.464	9.333	56.659
100yr 24hr 10min Chicago	1800	Outflow	0.083	0.14	0.061	9.167	97.488
100yr 24hr 10min Chicago	18000	Outflow	0.083	102.82	6.489	9.333	56.715
100yr 24hr 10min Chicago	1702	Outflow	0.083	0.07	0.029	9.167	94.007
100yr 24hr 10min Chicago	8	Outflow	0.083	102.89	6.501	9.333	56.74
100yr 24hr 10min Chicago	1701	Outflow	0.083	0.38	0.092	9.167	68.677
100yr 24hr 10min Chicago	7	Outflow	0.083	103.27	6.563	9.333	56.784
100yr 24hr 10min Chicago	17001	Outflow	0.083	103.27	6.575	9.333	56.784
100yr 24hr 10min Chicago	1700	Outflow	0.083	0.12	0.051	9.167	95.82

100yr 24hr 10min Chicago	17000	Outflow	0.083	103.39	6.596	9.333	56.829
100yr 24hr 10min Chicago	1601	Outflow	0.083	0.26	0.097	9.167	90.044
100yr 24hr 10min Chicago	6	Outflow	0.083	103.65	6.646	9.333	56.912
100yr 24hr 10min Chicago	16001	Outflow	0.083	103.65	6.661	9.333	56.912
100yr 24hr 10min Chicago	1600	Outflow	0.083	0.15	0.064	9.167	96.021
100yr 24hr 10min Chicago	16000	Outflow	0.083	103.8	6.687	9.333	56.969
100yr 24hr 10min Chicago	15001	Outflow	0.083	103.8	6.698	9.333	56.969
100yr 24hr 10min Chicago	1500	Outflow	0.083	0.11	0.047	9.167	95.834
100yr 24hr 10min Chicago	15000	Outflow	0.083	103.91	6.718	9.333	57.01
100yr 24hr 10min Chicago	1501	Outflow	0.083	0.56	0.184	9.167	84.733
100yr 24hr 10min Chicago	5	Outflow	0.083	104.47	6.827	9.333	57.158

100yr 24hr 10min Chicago	14001	Outflow	0.083	104.47	6.836	9.333	57.158
100yr 24hr 10min Chicago	1400	Outflow	0.083	0.06	0.026	9.167	94.913
100yr 24hr 10min Chicago	14000	Outflow	0.083	104.53	6.846	9.333	57.18
100yr 24hr 10min Chicago	13001	Outflow	0.083	104.53	6.853	9.333	57.18
100yr 24hr 10min Chicago	1300	Outflow	0.083	0.06	0.026	9.167	95.311
100yr 24hr 10min Chicago	13000	Outflow	0.083	104.59	6.863	9.333	57.202
100yr 24hr 10min Chicago	1201	Outflow	0.083	0.32	0.133	9.167	93.245
100yr 24hr 10min Chicago	4	Outflow	0.083	104.91	6.919	9.333	57.312
100yr 24hr 10min Chicago	12001	Outflow	0.083	104.91	6.929	9.333	57.312
100yr 24hr 10min Chicago	1200	Outflow	0.083	0.24	0.099	9.167	96.439
100yr 24hr 10min Chicago	12000	Outflow	0.083	105.15	6.975	9.333	57.401

100yr 24hr 10min Chicago	1101	Outflow	0.083	0.19	0.081	9.167	95.044
100yr 24hr 10min Chicago	3	Outflow	0.083	105.34	7.008	9.333	57.469
100yr 24hr 10min Chicago	11001	Outflow	0.083	105.34	7.01	9.333	57.469
100yr 24hr 10min Chicago	1100	Outflow	0.083	0.05	0.022	9.167	93.887
100yr 24hr 10min Chicago	11000	Outflow	0.083	105.39	7.018	9.333	57.486
100yr 24hr 10min Chicago	1001	Outflow	0.083	9.07	3.081	9.167	89.422
100yr 24hr 10min Chicago	2	Outflow	0.083	114.46	8.859	9.333	60.017
100yr 24hr 10min Chicago	10001	Outflow	0.083	114.46	8.837	9.333	60.017
100yr 24hr 10min Chicago	1000	Outflow	0.083	0.14	0.059	9.167	94.866
100yr 24hr 10min Chicago	1	Outflow	0.083	114.6	8.862	9.333	60.059

100yr 24hr 10min Chicago	2300	Outflow	0.083	0.23	0.012	9.417	22.891
100yr 24hr 10min Chicago	2202	Outflow	0.083	0.16	0.068	9.167	95.107
100yr 24hr 10min Chicago	2203	Outflow	0.083	0.17	0.074	9.167	96.559
100yr 24hr 10min Chicago	2206	Outflow	0.083	0.33	0.143	9.167	96.894
100yr 24hr 10min Chicago	2207	Outflow	0.083	0.1	0.025	9.167	68.891
100yr 24hr 10min Chicago	2204	Outflow	0.083	11.31	1.639	9.333	56.155
100yr 24hr 10min Chicago	18	Outflow	0.083	11.41	1.655	9.333	56.266
100yr 24hr 10min Chicago	22061	Outflow	0.083	11.41	1.643	9.333	56.258
100yr 24hr 10min Chicago	22060	Outflow	0.083	11.74	1.701	9.333	57.4
100yr 24hr 10min Chicago	2205	Outflow	0.083	0.83	0.346	9.167	93.358
100yr 24hr 10min Chicago	17	Outflow	0.083	12.57	1.846	9.333	59.775

100yr 24hr 10min Chicago	22031	Outflow	0.083	12.57	1.862	9.25	59.772
100yr 24hr 10min Chicago	22030	Outflow	0.083	12.74	1.893	9.25	60.263
100yr 24hr 10min Chicago	2201	Outflow	0.083	1.54	0.365	9.167	68.829
100yr 24hr 10min Chicago	16	Outflow	0.083	14.28	2.184	9.25	61.187
100yr 24hr 10min Chicago	22021	Outflow	0.083	14.28	2.263	9.25	61.185
100yr 24hr 10min Chicago	22020	Outflow	0.083	14.44	2.293	9.25	61.561
100yr 24hr 10min Chicago	15	Outflow	0.083	14.67	2.301	9.25	60.955
100yr 24hr 10min Chicago	22001	Outflow	0.083	14.67	2.32	9.25	60.954
100yr 24hr 10min Chicago	2200	Outflow	0.083	0.11	0.048	9.167	96.435
100yr 24hr 10min Chicago	22000	Outflow	0.083	14.78	2.34	9.25	61.218
100yr 24hr 10min Chicago	2600	Outflow	0.083	2.14	0.274	9.417	51.408

100yr 24hr 10min Chicago	2700	Outflow	0.083	6.38	0.801	9.417	51.405
100yr 24hr 10min Chicago	2701	Outflow	0.083	4.55	0.387	9.667	48.837
100yr 24hr 10min Chicago	2800	Outflow	0.083	16.9	1.108	9.917	48.834
100yr 24hr 10min Chicago	2900	Outflow	0.083	17.23	0.971	10.167	48.833
100yr 24hr 10min Chicago	28001	Outflow	0.083	17.23	0.902	10.417	48.833
100yr 24hr 10min Chicago	28000	Outflow	0.083	34.13	1.882	10.167	48.833
100yr 24hr 10min Chicago	23	Outflow	0.083	38.68	2.138	10.083	48.834
100yr 24hr 10min Chicago	27001	Outflow	0.083	38.68	2.122	10.167	48.832
100yr 24hr 10min Chicago	27000	Outflow	0.083	45.06	2.332	10.083	49.196
100yr 24hr 10min Chicago	2601	Outflow	0.083	20.7	1.966	9.583	50.095
100yr 24hr 10min Chicago	22	Outflow	0.083	65.76	3.961	9.75	49.479

100yr 24hr 10min Chicago	26001	Outflow	0.083	65.76	3.698	10	49.471
100yr 24hr 10min Chicago	26000	Outflow	0.083	67.9	3.794	9.917	49.532
100yr 24hr 10min Chicago	2501	Outflow	0.083	4.86	1.282	9.167	78.593
100yr 24hr 10min Chicago	21	Outflow	0.083	72.76	3.989	9.917	51.474
100yr 24hr 10min Chicago	25001	Outflow	0.083	72.76	3.79	10.167	51.47
100yr 24hr 10min Chicago	2500	Outflow	0.083	4.12	0.997	9.167	71.223
100yr 24hr 10min Chicago	25000	Outflow	0.083	76.88	3.891	10.083	52.528
100yr 24hr 10min Chicago	2401	Outflow	0.083	4.17	1.436	9.167	96.704
100yr 24hr 10min Chicago	20	Outflow	0.083	81.05	4.018	10.083	54.801
100yr 24hr 10min Chicago	24001	Outflow	0.083	81.05	3.999	10.167	54.799
100yr 24hr 10min Chicago	2400	Outflow	0.083	2.47	0.416	9.167	56.211

100yr 24hr 10min Chicago	24000	Outflow	0.083	83.52	4.054	10.167	54.841
100yr 24hr 10min Chicago	24002	Outflow	0.083	83.52	4.053	10.167	54.841
100yr 24hr 10min Chicago	2101	Outflow	0.083	0.04	0.005	9.167	39.888
100yr 24hr 10min Chicago	19	Outflow	0.083	83.56	4.054	10.167	54.834
100yr 24hr 10min Chicago	14	Outflow	0.083	98.34	5.638	9.333	55.793
100yr 24hr 10min Chicago	21001	Outflow	0.083	98.34	5.665	9.333	55.793
100yr 24hr 10min Chicago	2100	Outflow	0.083	0.05	0.022	9.167	94.142
100yr 24hr 10min Chicago	21000	Outflow	0.083	98.39	5.674	9.333	55.813
100yr 24hr 10min Chicago	2001	Outflow	0.083	0.04	0.005	9.333	41.971
100yr 24hr 10min Chicago	13	Outflow	0.083	98.43	5.679	9.333	55.807
100yr 24hr 10min Chicago	20001	Outflow	0.083	98.43	5.695	9.333	55.807

100yr 24hr 10min Chicago	2000	Outflow	0.083	0.04	0.017	9.167	92.437
100yr 24hr 10min Chicago	20000	Outflow	0.083	98.47	5.702	9.333	55.822
100yr 24hr 10min Chicago	1902	Outflow	0.083	3.51	0.907	9.167	73.279
100yr 24hr 10min Chicago	12	Outflow	0.083	101.98	6.304	9.333	56.423
100yr 24hr 10min Chicago	1901	Outflow	0.083	0.07	0.01	9.25	44.211
100yr 24hr 10min Chicago	11	Outflow	0.083	102.05	6.314	9.333	56.414
100yr 24hr 10min Chicago	19001	Outflow	0.083	102.05	6.333	9.333	56.414
100yr 24hr 10min Chicago	1900	Outflow	0.083	0.05	0.022	9.167	93.883
100yr 24hr 10min Chicago	19000	Outflow	0.083	102.1	6.341	9.333	56.433
100yr 24hr 10min Chicago	1802	Outflow	0.083	0.45	0.14	9.167	80.249
100yr 24hr 10min Chicago	10	Outflow	0.083	102.55	6.422	9.333	56.537

100yr 24hr 10min Chicago	1801	Outflow	0.083	0.13	0.055	9.167	93.58
100yr 24hr 10min Chicago	9	Outflow	0.083	102.68	6.444	9.333	56.584
100yr 24hr 10min Chicago	18001	Outflow	0.083	102.68	6.467	9.333	56.584
100yr 24hr 10min Chicago	1800	Outflow	0.083	0.14	0.061	9.167	96.598
100yr 24hr 10min Chicago	18000	Outflow	0.083	102.82	6.492	9.333	56.638
100yr 24hr 10min Chicago	1702	Outflow	0.083	0.07	0.029	9.167	93.207
100yr 24hr 10min Chicago	8	Outflow	0.083	102.89	6.504	9.333	56.663
100yr 24hr 10min Chicago	1701	Outflow	0.083	0.38	0.092	9.167	68.407
100yr 24hr 10min Chicago	7	Outflow	0.083	103.27	6.566	9.333	56.707
100yr 24hr 10min Chicago	17001	Outflow	0.083	103.27	6.578	9.333	56.706
100yr 24hr 10min Chicago	1700	Outflow	0.083	0.12	0.051	9.167	95.01

100yr 24hr 10min Chicago	17000	Outflow	0.083	103.39	6.599	9.333	56.751
100yr 24hr 10min Chicago	1601	Outflow	0.083	0.26	0.097	9.167	89.484
100yr 24hr 10min Chicago	6	Outflow	0.083	103.65	6.649	9.333	56.833
100yr 24hr 10min Chicago	16001	Outflow	0.083	103.65	6.664	9.333	56.833
100yr 24hr 10min Chicago	1600	Outflow	0.083	0.15	0.064	9.167	95.171
100yr 24hr 10min Chicago	16000	Outflow	0.083	103.8	6.69	9.333	56.888
100yr 24hr 10min Chicago	15001	Outflow	0.083	103.8	6.701	9.333	56.888
100yr 24hr 10min Chicago	1500	Outflow	0.083	0.11	0.047	9.167	95.014
100yr 24hr 10min Chicago	15000	Outflow	0.083	103.91	6.721	9.333	56.929
100yr 24hr 10min Chicago	1501	Outflow	0.083	0.56	0.184	9.167	84.333
100yr 24hr 10min Chicago	5	Outflow	0.083	104.47	6.83	9.333	57.075

100yr 24hr 10min Chicago	14001	Outflow	0.083	104.47	6.839	9.333	57.075
100yr 24hr 10min Chicago	1400	Outflow	0.083	0.06	0.026	9.167	94.063
100yr 24hr 10min Chicago	14000	Outflow	0.083	104.53	6.849	9.333	57.097
100yr 24hr 10min Chicago	13001	Outflow	0.083	104.53	6.856	9.333	57.097
100yr 24hr 10min Chicago	1300	Outflow	0.083	0.06	0.026	9.167	94.431
100yr 24hr 10min Chicago	13000	Outflow	0.083	104.59	6.866	9.333	57.118
100yr 24hr 10min Chicago	1201	Outflow	0.083	0.32	0.133	9.167	92.465
100yr 24hr 10min Chicago	4	Outflow	0.083	104.91	6.922	9.333	57.226
100yr 24hr 10min Chicago	12001	Outflow	0.083	104.91	6.931	9.333	57.226
100yr 24hr 10min Chicago	1200	Outflow	0.083	0.24	0.099	9.167	96.049
100yr 24hr 10min Chicago	12000	Outflow	0.083	105.15	6.977	9.333	57.314

100yr 24hr 10min Chicago	1101	Outflow	0.083	0.19	0.081	9.167	94.214
100yr 24hr 10min Chicago	3	Outflow	0.083	105.34	7.01	9.333	57.381
100yr 24hr 10min Chicago	11001	Outflow	0.083	105.34	7.012	9.333	57.381
100yr 24hr 10min Chicago	1100	Outflow	0.083	0.05	0.022	9.167	93.007
100yr 24hr 10min Chicago	11000	Outflow	0.083	105.39	7.021	9.333	57.398
100yr 24hr 10min Chicago	1001	Outflow	0.083	9.07	3.081	9.167	88.882
100yr 24hr 10min Chicago	2	Outflow	0.083	114.46	8.862	9.333	59.893
100yr 24hr 10min Chicago	10001	Outflow	0.083	114.46	8.84	9.333	59.892
100yr 24hr 10min Chicago	1000	Outflow	0.083	0.14	0.059	9.167	94.086
100yr 24hr 10min Chicago	1	Outflow	0.083	114.6	8.865	9.333	59.934

100yr 24hr 10min Chicago	2300	Outflow	0.083	0.23	0.009	9.5	22.773
100yr 24hr 10min Chicago	2202	Outflow	0.083	0.16	0.068	9.167	95.107
100yr 24hr 10min Chicago	2203	Outflow	0.083	0.17	0.074	9.167	96.559
100yr 24hr 10min Chicago	2206	Outflow	0.083	0.33	0.143	9.167	96.894
100yr 24hr 10min Chicago	2207	Outflow	0.083	0.1	0.025	9.167	68.891
100yr 24hr 10min Chicago	2204	Outflow	0.083	11.31	1.639	9.333	56.155
100yr 24hr 10min Chicago	18	Outflow	0.083	11.41	1.655	9.333	56.266
100yr 24hr 10min Chicago	22061	Outflow	0.083	11.41	1.643	9.333	56.258
100yr 24hr 10min Chicago	22060	Outflow	0.083	11.74	1.701	9.333	57.4
100yr 24hr 10min Chicago	2205	Outflow	0.083	0.83	0.346	9.167	93.358
100yr 24hr 10min Chicago	17	Outflow	0.083	12.57	1.846	9.333	59.775

100yr 24hr 10min Chicago	22031	Outflow	0.083	12.57	1.862	9.25	59.772
100yr 24hr 10min Chicago	22030	Outflow	0.083	12.74	1.893	9.25	60.263
100yr 24hr 10min Chicago	2201	Outflow	0.083	1.54	0.365	9.167	68.829
100yr 24hr 10min Chicago	16	Outflow	0.083	14.28	2.184	9.25	61.187
100yr 24hr 10min Chicago	22021	Outflow	0.083	14.28	2.263	9.25	61.185
100yr 24hr 10min Chicago	22020	Outflow	0.083	14.44	2.293	9.25	61.561
100yr 24hr 10min Chicago	15	Outflow	0.083	14.67	2.299	9.25	60.953
100yr 24hr 10min Chicago	22001	Outflow	0.083	14.67	2.318	9.25	60.952
100yr 24hr 10min Chicago	2200	Outflow	0.083	0.11	0.048	9.167	96.435
100yr 24hr 10min Chicago	22000	Outflow	0.083	14.78	2.338	9.25	61.216
100yr 24hr 10min Chicago	2600	Outflow	0.083	2.14	0.205	9.5	51.125

100yr 24hr 10min Chicago	2700	Outflow	0.083	6.38	0.6	9.5	51.145
100yr 24hr 10min Chicago	2701	Outflow	0.083	4.55	0.28	9.75	48.769
100yr 24hr 10min Chicago	2800	Outflow	0.083	16.9	0.787	10	48.806
100yr 24hr 10min Chicago	2900	Outflow	0.083	17.23	0.684	10.25	48.816
100yr 24hr 10min Chicago	28001	Outflow	0.083	17.23	0.644	10.583	48.816
100yr 24hr 10min Chicago	28000	Outflow	0.083	34.13	1.367	10.333	48.811
100yr 24hr 10min Chicago	23	Outflow	0.083	38.68	1.586	10.167	48.806
100yr 24hr 10min Chicago	27001	Outflow	0.083	38.68	1.578	10.333	48.806
100yr 24hr 10min Chicago	27000	Outflow	0.083	45.06	1.844	10.083	49.137
100yr 24hr 10min Chicago	2601	Outflow	0.083	20.7	1.437	9.667	50.001
100yr 24hr 10min Chicago	22	Outflow	0.083	65.76	3.164	9.833	49.409

100yr 24hr 10min Chicago	26001	Outflow	0.083	65.76	3.033	10.083	49.402
100yr 24hr 10min Chicago	26000	Outflow	0.083	67.9	3.141	10	49.456
100yr 24hr 10min Chicago	2501	Outflow	0.083	4.86	1.282	9.167	78.593
100yr 24hr 10min Chicago	21	Outflow	0.083	72.76	3.309	10	51.402
100yr 24hr 10min Chicago	25001	Outflow	0.083	72.76	3.196	10.167	51.398
100yr 24hr 10min Chicago	2500	Outflow	0.083	4.12	0.997	9.167	71.223
100yr 24hr 10min Chicago	25000	Outflow	0.083	76.88	3.298	10.167	52.461
100yr 24hr 10min Chicago	2401	Outflow	0.083	4.17	1.436	9.167	96.704
100yr 24hr 10min Chicago	20	Outflow	0.083	81.05	3.411	10.167	54.737
100yr 24hr 10min Chicago	24001	Outflow	0.083	81.05	3.398	10.167	54.735
100yr 24hr 10min Chicago	2400	Outflow	0.083	2.47	0.416	9.167	56.211

100yr 24hr 10min Chicago	24000	Outflow	0.083	83.52	3.452	10.167	54.779
100yr 24hr 10min Chicago	24002	Outflow	0.083	83.52	3.451	10.167	54.779
100yr 24hr 10min Chicago	2101	Outflow	0.083	0.04	0.004	9.25	38.461
100yr 24hr 10min Chicago	19	Outflow	0.083	83.56	3.452	10.167	54.771
100yr 24hr 10min Chicago	14	Outflow	0.083	98.34	5.621	9.25	55.74
100yr 24hr 10min Chicago	21001	Outflow	0.083	98.34	5.641	9.333	55.74
100yr 24hr 10min Chicago	2100	Outflow	0.083	0.05	0.022	9.167	94.142
100yr 24hr 10min Chicago	21000	Outflow	0.083	98.39	5.649	9.333	55.759
100yr 24hr 10min Chicago	2001	Outflow	0.083	0.04	0.004	9.333	41.384
100yr 24hr 10min Chicago	13	Outflow	0.083	98.43	5.653	9.333	55.753
100yr 24hr 10min Chicago	20001	Outflow	0.083	98.43	5.67	9.333	55.753

100yr 24hr 10min Chicago	2000	Outflow	0.083	0.04	0.017	9.167	92.437
100yr 24hr 10min Chicago	20000	Outflow	0.083	98.47	5.677	9.333	55.768
100yr 24hr 10min Chicago	1902	Outflow	0.083	3.51	0.907	9.167	73.279
100yr 24hr 10min Chicago	12	Outflow	0.083	101.98	6.29	9.25	56.371
100yr 24hr 10min Chicago	1901	Outflow	0.083	0.07	0.008	9.333	43.43
100yr 24hr 10min Chicago	11	Outflow	0.083	102.05	6.297	9.25	56.362
100yr 24hr 10min Chicago	19001	Outflow	0.083	102.05	6.308	9.333	56.362
100yr 24hr 10min Chicago	1900	Outflow	0.083	0.05	0.022	9.167	93.883
100yr 24hr 10min Chicago	19000	Outflow	0.083	102.1	6.316	9.333	56.38
100yr 24hr 10min Chicago	1802	Outflow	0.083	0.45	0.14	9.167	80.249
100yr 24hr 10min Chicago	10	Outflow	0.083	102.55	6.397	9.333	56.485

100yr 24hr 10min Chicago	1801	Outflow	0.083	0.13	0.055	9.167	93.58
100yr 24hr 10min Chicago	9	Outflow	0.083	102.68	6.419	9.333	56.532
100yr 24hr 10min Chicago	18001	Outflow	0.083	102.68	6.445	9.333	56.532
100yr 24hr 10min Chicago	1800	Outflow	0.083	0.14	0.061	9.167	96.598
100yr 24hr 10min Chicago	18000	Outflow	0.083	102.82	6.469	9.333	56.586
100yr 24hr 10min Chicago	1702	Outflow	0.083	0.07	0.029	9.167	93.207
100yr 24hr 10min Chicago	8	Outflow	0.083	102.89	6.482	9.333	56.611
100yr 24hr 10min Chicago	1701	Outflow	0.083	0.38	0.092	9.167	68.407
100yr 24hr 10min Chicago	7	Outflow	0.083	103.27	6.544	9.333	56.655
100yr 24hr 10min Chicago	17001	Outflow	0.083	103.27	6.556	9.333	56.655
100yr 24hr 10min Chicago	1700	Outflow	0.083	0.12	0.051	9.167	95.01

100yr 24hr 10min Chicago	17000	Outflow	0.083	103.39	6.577	9.333	56.699
100yr 24hr 10min Chicago	1601	Outflow	0.083	0.26	0.097	9.167	89.484
100yr 24hr 10min Chicago	6	Outflow	0.083	103.65	6.627	9.333	56.781
100yr 24hr 10min Chicago	16001	Outflow	0.083	103.65	6.643	9.333	56.781
100yr 24hr 10min Chicago	1600	Outflow	0.083	0.15	0.064	9.167	95.171
100yr 24hr 10min Chicago	16000	Outflow	0.083	103.8	6.67	9.333	56.837
100yr 24hr 10min Chicago	15001	Outflow	0.083	103.8	6.682	9.333	56.837
100yr 24hr 10min Chicago	1500	Outflow	0.083	0.11	0.047	9.167	95.014
100yr 24hr 10min Chicago	15000	Outflow	0.083	103.91	6.701	9.333	56.877
100yr 24hr 10min Chicago	1501	Outflow	0.083	0.56	0.184	9.167	84.333
100yr 24hr 10min Chicago	5	Outflow	0.083	104.47	6.81	9.333	57.024

100yr 24hr 10min Chicago	14001	Outflow	0.083	104.47	6.82	9.333	57.024
100yr 24hr 10min Chicago	1400	Outflow	0.083	0.06	0.026	9.167	94.063
100yr 24hr 10min Chicago	14000	Outflow	0.083	104.53	6.83	9.333	57.045
100yr 24hr 10min Chicago	13001	Outflow	0.083	104.53	6.837	9.333	57.045
100yr 24hr 10min Chicago	1300	Outflow	0.083	0.06	0.026	9.167	94.431
100yr 24hr 10min Chicago	13000	Outflow	0.083	104.59	6.847	9.333	57.067
100yr 24hr 10min Chicago	1201	Outflow	0.083	0.32	0.133	9.167	92.465
100yr 24hr 10min Chicago	4	Outflow	0.083	104.91	6.903	9.333	57.175
100yr 24hr 10min Chicago	12001	Outflow	0.083	104.91	6.914	9.333	57.175
100yr 24hr 10min Chicago	1200	Outflow	0.083	0.24	0.099	9.167	96.049
100yr 24hr 10min Chicago	12000	Outflow	0.083	105.15	6.96	9.333	57.263

100yr 24hr 10min Chicago	1101	Outflow	0.083	0.19	0.081	9.167	94.214
100yr 24hr 10min Chicago	3	Outflow	0.083	105.34	6.993	9.333	57.33
100yr 24hr 10min Chicago	11001	Outflow	0.083	105.34	6.995	9.333	57.33
100yr 24hr 10min Chicago	1100	Outflow	0.083	0.05	0.022	9.167	93.007
100yr 24hr 10min Chicago	11000	Outflow	0.083	105.39	7.004	9.333	57.347
100yr 24hr 10min Chicago	1001	Outflow	0.083	9.07	3.081	9.167	88.882
100yr 24hr 10min Chicago	2	Outflow	0.083	114.46	8.844	9.333	59.846
100yr 24hr 10min Chicago	10001	Outflow	0.083	114.46	8.823	9.333	59.846
100yr 24hr 10min Chicago	1000	Outflow	0.083	0.14	0.059	9.167	94.086
100yr 24hr 10min Chicago	1	Outflow	0.083	114.6	8.848	9.333	59.887

100yr 24hr 10min Chicago	2300	Outflow	0.083	0.23	0.01	9.5	21.799
100yr 24hr 10min Chicago	2202	Outflow	0.083	0.16	0.068	9.167	94.982
100yr 24hr 10min Chicago	2203	Outflow	0.083	0.17	0.074	9.167	96.469
100yr 24hr 10min Chicago	2206	Outflow	0.083	0.33	0.143	9.167	96.819
100yr 24hr 10min Chicago	2207	Outflow	0.083	0.1	0.025	9.167	68.59
100yr 24hr 10min Chicago	2204	Outflow	0.083	11.31	1.624	9.333	55.698
100yr 24hr 10min Chicago	18	Outflow	0.083	11.41	1.64	9.333	55.811
100yr 24hr 10min Chicago	22061	Outflow	0.083	11.41	1.627	9.333	55.803
100yr 24hr 10min Chicago	22060	Outflow	0.083	11.74	1.685	9.333	56.956
100yr 24hr 10min Chicago	2205	Outflow	0.083	0.83	0.346	9.167	93.237
100yr 24hr 10min Chicago	17	Outflow	0.083	12.57	1.83	9.333	59.351

100yr 24hr 10min Chicago	22031	Outflow	0.083	12.57	1.846	9.25	59.348
100yr 24hr 10min Chicago	22030	Outflow	0.083	12.74	1.877	9.25	59.844
100yr 24hr 10min Chicago	2201	Outflow	0.083	1.54	0.363	9.167	68.478
100yr 24hr 10min Chicago	16	Outflow	0.083	14.28	2.167	9.25	60.775
100yr 24hr 10min Chicago	22021	Outflow	0.083	14.28	2.246	9.25	60.774
100yr 24hr 10min Chicago	22020	Outflow	0.083	14.44	2.276	9.25	61.153
100yr 24hr 10min Chicago	15	Outflow	0.083	14.67	2.283	9.25	60.536
100yr 24hr 10min Chicago	22001	Outflow	0.083	14.67	2.26	9.25	60.535
100yr 24hr 10min Chicago	2200	Outflow	0.083	0.11	0.048	9.167	96.331
100yr 24hr 10min Chicago	22000	Outflow	0.083	14.78	2.28	9.25	60.801
100yr 24hr 10min Chicago	2600	Outflow	0.083	2.14	0.236	9.417	49.359

100yr 24hr 10min Chicago	2700	Outflow	0.083	6.38	0.686	9.417	49.363
100yr 24hr 10min Chicago	2701	Outflow	0.083	4.55	0.326	9.667	46.905
100yr 24hr 10min Chicago	2800	Outflow	0.083	16.9	0.928	10	46.907
100yr 24hr 10min Chicago	2900	Outflow	0.083	17.23	0.809	10.167	46.907
100yr 24hr 10min Chicago	28001	Outflow	0.083	17.23	0.752	10.5	46.907
100yr 24hr 10min Chicago	28000	Outflow	0.083	34.13	1.582	10.25	46.907
100yr 24hr 10min Chicago	23	Outflow	0.083	38.68	1.814	10.167	46.907
100yr 24hr 10min Chicago	27001	Outflow	0.083	38.68	1.804	10.25	46.906
100yr 24hr 10min Chicago	27000	Outflow	0.083	45.06	2.025	10.083	47.254
100yr 24hr 10min Chicago	2601	Outflow	0.083	20.7	1.664	9.667	48.126
100yr 24hr 10min Chicago	22	Outflow	0.083	65.76	3.487	9.75	47.528

100yr 24hr 10min Chicago	26001	Outflow	0.083	65.76	3.27	10	47.521
100yr 24hr 10min Chicago	26000	Outflow	0.083	67.9	3.368	10	47.579
100yr 24hr 10min Chicago	2501	Outflow	0.083	4.86	1.278	9.167	78.26
100yr 24hr 10min Chicago	21	Outflow	0.083	72.76	3.541	9.917	49.628
100yr 24hr 10min Chicago	25001	Outflow	0.083	72.76	3.412	10.167	49.624
100yr 24hr 10min Chicago	2500	Outflow	0.083	4.12	0.993	9.167	70.871
100yr 24hr 10min Chicago	25000	Outflow	0.083	76.88	3.514	10.167	50.763
100yr 24hr 10min Chicago	2401	Outflow	0.083	4.17	1.436	9.167	96.607
100yr 24hr 10min Chicago	20	Outflow	0.083	81.05	3.632	10.083	53.122
100yr 24hr 10min Chicago	24001	Outflow	0.083	81.05	3.618	10.167	53.12
100yr 24hr 10min Chicago	2400	Outflow	0.083	2.47	0.412	9.167	55.792

100yr 24hr 10min Chicago	24000	Outflow	0.083	83.52	3.672	10.167	53.199
100yr 24hr 10min Chicago	24002	Outflow	0.083	83.52	3.672	10.167	53.199
100yr 24hr 10min Chicago	2101	Outflow	0.083	0.04	0.005	9.25	37.602
100yr 24hr 10min Chicago	19	Outflow	0.083	83.56	3.672	10.167	53.191
100yr 24hr 10min Chicago	14	Outflow	0.083	98.34	5.59	9.333	54.335
100yr 24hr 10min Chicago	21001	Outflow	0.083	98.34	5.591	9.333	54.335
100yr 24hr 10min Chicago	2100	Outflow	0.083	0.05	0.022	9.167	94.059
100yr 24hr 10min Chicago	21000	Outflow	0.083	98.39	5.6	9.333	54.355
100yr 24hr 10min Chicago	2001	Outflow	0.083	0.04	0.004	9.333	40.052
100yr 24hr 10min Chicago	13	Outflow	0.083	98.43	5.604	9.333	54.349
100yr 24hr 10min Chicago	20001	Outflow	0.083	98.43	5.607	9.333	54.349

100yr 24hr 10min Chicago	2000	Outflow	0.083	0.04	0.017	9.167	92.362
100yr 24hr 10min Chicago	20000	Outflow	0.083	98.47	5.614	9.333	54.365
100yr 24hr 10min Chicago	1902	Outflow	0.083	3.51	0.903	9.167	72.988
100yr 24hr 10min Chicago	12	Outflow	0.083	101.98	6.24	9.25	55.006
100yr 24hr 10min Chicago	1901	Outflow	0.083	0.07	0.008	9.333	42.148
100yr 24hr 10min Chicago	11	Outflow	0.083	102.05	6.248	9.25	54.997
100yr 24hr 10min Chicago	19001	Outflow	0.083	102.05	6.239	9.25	54.997
100yr 24hr 10min Chicago	1900	Outflow	0.083	0.05	0.022	9.167	93.801
100yr 24hr 10min Chicago	19000	Outflow	0.083	102.1	6.248	9.25	55.016
100yr 24hr 10min Chicago	1802	Outflow	0.083	0.45	0.14	9.167	80
100yr 24hr 10min Chicago	10	Outflow	0.083	102.55	6.34	9.25	55.126

100yr 24hr 10min Chicago	1801	Outflow	0.083	0.13	0.055	9.167	93.466
100yr 24hr 10min Chicago	9	Outflow	0.083	102.68	6.364	9.25	55.174
100yr 24hr 10min Chicago	18001	Outflow	0.083	102.68	6.368	9.333	55.174
100yr 24hr 10min Chicago	1800	Outflow	0.083	0.14	0.061	9.167	96.516
100yr 24hr 10min Chicago	18000	Outflow	0.083	102.82	6.392	9.333	55.23
100yr 24hr 10min Chicago	1702	Outflow	0.083	0.07	0.029	9.167	93.084
100yr 24hr 10min Chicago	8	Outflow	0.083	102.89	6.404	9.333	55.256
100yr 24hr 10min Chicago	1701	Outflow	0.083	0.38	0.092	9.167	68.1
100yr 24hr 10min Chicago	7	Outflow	0.083	103.27	6.466	9.333	55.303
100yr 24hr 10min Chicago	17001	Outflow	0.083	103.27	6.483	9.333	55.303
100yr 24hr 10min Chicago	1700	Outflow	0.083	0.12	0.051	9.167	94.899

100yr 24hr 10min Chicago	17000	Outflow	0.083	103.39	6.504	9.333	55.349
100yr 24hr 10min Chicago	1601	Outflow	0.083	0.26	0.097	9.167	89.303
100yr 24hr 10min Chicago	6	Outflow	0.083	103.65	6.554	9.333	55.434
100yr 24hr 10min Chicago	16001	Outflow	0.083	103.65	6.578	9.333	55.434
100yr 24hr 10min Chicago	1600	Outflow	0.083	0.15	0.064	9.167	95.068
100yr 24hr 10min Chicago	16000	Outflow	0.083	103.8	6.604	9.333	55.491
100yr 24hr 10min Chicago	15001	Outflow	0.083	103.8	6.623	9.333	55.491
100yr 24hr 10min Chicago	1500	Outflow	0.083	0.11	0.047	9.167	94.903
100yr 24hr 10min Chicago	15000	Outflow	0.083	103.91	6.643	9.333	55.533
100yr 24hr 10min Chicago	1501	Outflow	0.083	0.56	0.184	9.167	84.119
100yr 24hr 10min Chicago	5	Outflow	0.083	104.47	6.752	9.333	55.686

100yr 24hr 10min Chicago	14001	Outflow	0.083	104.47	6.766	9.333	55.686
100yr 24hr 10min Chicago	1400	Outflow	0.083	0.06	0.026	9.167	93.952
100yr 24hr 10min Chicago	14000	Outflow	0.083	104.53	6.776	9.333	55.708
100yr 24hr 10min Chicago	13001	Outflow	0.083	104.53	6.787	9.333	55.708
100yr 24hr 10min Chicago	1300	Outflow	0.083	0.06	0.026	9.167	94.342
100yr 24hr 10min Chicago	13000	Outflow	0.083	104.59	6.798	9.333	55.73
100yr 24hr 10min Chicago	1201	Outflow	0.083	0.32	0.133	9.167	92.33
100yr 24hr 10min Chicago	4	Outflow	0.083	104.91	6.853	9.333	55.842
100yr 24hr 10min Chicago	12001	Outflow	0.083	104.91	6.878	9.333	55.842
100yr 24hr 10min Chicago	1200	Outflow	0.083	0.24	0.099	9.167	95.959
100yr 24hr 10min Chicago	12000	Outflow	0.083	105.15	6.924	9.333	55.933

100yr 24hr 10min Chicago	1101	Outflow	0.083	0.19	0.081	9.167	94.098
100yr 24hr 10min Chicago	3	Outflow	0.083	105.34	6.957	9.333	56.002
100yr 24hr 10min Chicago	11001	Outflow	0.083	105.34	6.962	9.333	56.002
100yr 24hr 10min Chicago	1100	Outflow	0.083	0.05	0.022	9.167	92.918
100yr 24hr 10min Chicago	11000	Outflow	0.083	105.39	6.971	9.333	56.02
100yr 24hr 10min Chicago	1001	Outflow	0.083	9.07	3.078	9.167	88.701
100yr 24hr 10min Chicago	2	Outflow	0.083	114.46	8.81	9.333	58.609
100yr 24hr 10min Chicago	10001	Outflow	0.083	114.46	8.797	9.333	58.609
100yr 24hr 10min Chicago	1000	Outflow	0.083	0.14	0.059	9.167	93.99
100yr 24hr 10min Chicago	1	Outflow	0.083	114.6	8.821	9.333	58.652

100yr 24hr 10min Chicago	2300	Outflow	0.083	0.23	0.011	9.417	23.952
100yr 24hr 10min Chicago	2202	Outflow	0.083	0.16	0.068	9.167	95.107
100yr 24hr 10min Chicago	2203	Outflow	0.083	0.17	0.074	9.167	96.559
100yr 24hr 10min Chicago	2206	Outflow	0.083	0.33	0.143	9.167	96.894
100yr 24hr 10min Chicago	2207	Outflow	0.083	0.1	0.025	9.167	68.891
100yr 24hr 10min Chicago	2204	Outflow	0.083	11.31	1.639	9.333	56.155
100yr 24hr 10min Chicago	18	Outflow	0.083	11.41	1.655	9.333	56.266
100yr 24hr 10min Chicago	22061	Outflow	0.083	11.41	1.643	9.333	56.258
100yr 24hr 10min Chicago	22060	Outflow	0.083	11.74	1.701	9.333	57.4
100yr 24hr 10min Chicago	2205	Outflow	0.083	0.83	0.346	9.167	93.358
100yr 24hr 10min Chicago	17	Outflow	0.083	12.57	1.846	9.333	59.775

100yr 24hr 10min Chicago	22031	Outflow	0.083	12.57	1.862	9.25	59.772
100yr 24hr 10min Chicago	22030	Outflow	0.083	12.74	1.893	9.25	60.263
100yr 24hr 10min Chicago	2201	Outflow	0.083	1.54	0.365	9.167	68.829
100yr 24hr 10min Chicago	16	Outflow	0.083	14.28	2.184	9.25	61.187
100yr 24hr 10min Chicago	22021	Outflow	0.083	14.28	2.263	9.25	61.185
100yr 24hr 10min Chicago	22020	Outflow	0.083	14.44	2.293	9.25	61.561
100yr 24hr 10min Chicago	15	Outflow	0.083	14.67	2.301	9.25	60.971
100yr 24hr 10min Chicago	22001	Outflow	0.083	14.67	2.32	9.25	60.971
100yr 24hr 10min Chicago	2200	Outflow	0.083	0.11	0.048	9.167	96.435
100yr 24hr 10min Chicago	22000	Outflow	0.083	14.78	2.34	9.25	61.235
100yr 24hr 10min Chicago	2600	Outflow	0.083	2.14	0.256	9.417	53.35

100yr 24hr 10min Chicago	2700	Outflow	0.083	6.38	0.746	9.417	53.354
100yr 24hr 10min Chicago	2701	Outflow	0.083	4.55	0.356	9.667	50.772
100yr 24hr 10min Chicago	2800	Outflow	0.083	16.9	1.011	10	50.774
100yr 24hr 10min Chicago	2900	Outflow	0.083	17.23	0.884	10.167	50.774
100yr 24hr 10min Chicago	28001	Outflow	0.083	17.23	0.829	10.417	50.774
100yr 24hr 10min Chicago	28000	Outflow	0.083	34.13	1.74	10.167	50.774
100yr 24hr 10min Chicago	23	Outflow	0.083	38.68	1.996	10.083	50.773
100yr 24hr 10min Chicago	27001	Outflow	0.083	38.68	1.988	10.167	50.773
100yr 24hr 10min Chicago	27000	Outflow	0.083	45.06	2.23	10.083	51.138
100yr 24hr 10min Chicago	2601	Outflow	0.083	20.7	1.81	9.583	52.056
100yr 24hr 10min Chicago	22	Outflow	0.083	65.76	3.825	9.75	51.427

100yr 24hr 10min Chicago	26001	Outflow	0.083	65.76	3.608	10	51.419
100yr 24hr 10min Chicago	26000	Outflow	0.083	67.9	3.71	10	51.48
100yr 24hr 10min Chicago	2501	Outflow	0.083	4.86	1.282	9.167	78.593
100yr 24hr 10min Chicago	21	Outflow	0.083	72.76	3.903	9.917	53.291
100yr 24hr 10min Chicago	25001	Outflow	0.083	72.76	3.732	10.167	53.287
100yr 24hr 10min Chicago	2500	Outflow	0.083	4.12	0.997	9.167	71.223
100yr 24hr 10min Chicago	25000	Outflow	0.083	76.88	3.834	10.167	54.249
100yr 24hr 10min Chicago	2401	Outflow	0.083	4.17	1.436	9.167	96.704
100yr 24hr 10min Chicago	20	Outflow	0.083	81.05	3.958	10.083	56.433
100yr 24hr 10min Chicago	24001	Outflow	0.083	81.05	3.942	10.167	56.431
100yr 24hr 10min Chicago	2400	Outflow	0.083	2.47	0.416	9.167	56.211

100yr 24hr 10min Chicago	24000	Outflow	0.083	83.52	3.996	10.167	56.425
100yr 24hr 10min Chicago	24002	Outflow	0.083	83.52	3.996	10.167	56.425
100yr 24hr 10min Chicago	2101	Outflow	0.083	0.04	0.005	9.25	40.915
100yr 24hr 10min Chicago	19	Outflow	0.083	83.56	3.997	10.167	56.417
100yr 24hr 10min Chicago	14	Outflow	0.083	98.34	5.723	9.333	57.141
100yr 24hr 10min Chicago	21001	Outflow	0.083	98.34	5.749	9.333	57.141
100yr 24hr 10min Chicago	2100	Outflow	0.083	0.05	0.022	9.167	94.142
100yr 24hr 10min Chicago	21000	Outflow	0.083	98.39	5.757	9.333	57.16
100yr 24hr 10min Chicago	2001	Outflow	0.083	0.04	0.005	9.333	43.529
100yr 24hr 10min Chicago	13	Outflow	0.083	98.43	5.762	9.333	57.154
100yr 24hr 10min Chicago	20001	Outflow	0.083	98.43	5.777	9.333	57.154

100yr 24hr 10min Chicago	2000	Outflow	0.083	0.04	0.017	9.167	92.437
100yr 24hr 10min Chicago	20000	Outflow	0.083	98.47	5.784	9.333	57.169
100yr 24hr 10min Chicago	1902	Outflow	0.083	3.51	0.907	9.167	73.279
100yr 24hr 10min Chicago	12	Outflow	0.083	101.98	6.387	9.333	57.723
100yr 24hr 10min Chicago	1901	Outflow	0.083	0.07	0.009	9.25	45.747
100yr 24hr 10min Chicago	11	Outflow	0.083	102.05	6.396	9.333	57.715
100yr 24hr 10min Chicago	19001	Outflow	0.083	102.05	6.414	9.333	57.715
100yr 24hr 10min Chicago	1900	Outflow	0.083	0.05	0.022	9.167	93.883
100yr 24hr 10min Chicago	19000	Outflow	0.083	102.1	6.423	9.333	57.733
100yr 24hr 10min Chicago	1802	Outflow	0.083	0.45	0.14	9.167	80.249
100yr 24hr 10min Chicago	10	Outflow	0.083	102.55	6.504	9.333	57.831

100yr 24hr 10min Chicago	1801	Outflow	0.083	0.13	0.055	9.167	93.58
100yr 24hr 10min Chicago	9	Outflow	0.083	102.68	6.526	9.333	57.877
100yr 24hr 10min Chicago	18001	Outflow	0.083	102.68	6.547	9.333	57.876
100yr 24hr 10min Chicago	1800	Outflow	0.083	0.14	0.061	9.167	96.598
100yr 24hr 10min Chicago	18000	Outflow	0.083	102.82	6.571	9.333	57.929
100yr 24hr 10min Chicago	1702	Outflow	0.083	0.07	0.029	9.167	93.207
100yr 24hr 10min Chicago	8	Outflow	0.083	102.89	6.583	9.333	57.953
100yr 24hr 10min Chicago	1701	Outflow	0.083	0.38	0.092	9.167	68.407
100yr 24hr 10min Chicago	7	Outflow	0.083	103.27	6.646	9.333	57.992
100yr 24hr 10min Chicago	17001	Outflow	0.083	103.27	6.656	9.333	57.991
100yr 24hr 10min Chicago	1700	Outflow	0.083	0.12	0.051	9.167	95.01

100yr 24hr 10min Chicago	17000	Outflow	0.083	103.39	6.677	9.333	58.034
100yr 24hr 10min Chicago	1601	Outflow	0.083	0.26	0.097	9.167	89.484
100yr 24hr 10min Chicago	6	Outflow	0.083	103.65	6.727	9.333	58.113
100yr 24hr 10min Chicago	16001	Outflow	0.083	103.65	6.74	9.333	58.113
100yr 24hr 10min Chicago	1600	Outflow	0.083	0.15	0.064	9.167	95.171
100yr 24hr 10min Chicago	16000	Outflow	0.083	103.8	6.766	9.333	58.167
100yr 24hr 10min Chicago	15001	Outflow	0.083	103.8	6.777	9.333	58.167
100yr 24hr 10min Chicago	1500	Outflow	0.083	0.11	0.047	9.167	95.014
100yr 24hr 10min Chicago	15000	Outflow	0.083	103.91	6.796	9.333	58.206
100yr 24hr 10min Chicago	1501	Outflow	0.083	0.56	0.184	9.167	84.333
100yr 24hr 10min Chicago	5	Outflow	0.083	104.47	6.905	9.333	58.346

100yr 24hr 10min Chicago	14001	Outflow	0.083	104.47	6.914	9.333	58.346
100yr 24hr 10min Chicago	1400	Outflow	0.083	0.06	0.026	9.167	94.063
100yr 24hr 10min Chicago	14000	Outflow	0.083	104.53	6.924	9.333	58.366
100yr 24hr 10min Chicago	13001	Outflow	0.083	104.53	6.93	9.333	58.366
100yr 24hr 10min Chicago	1300	Outflow	0.083	0.06	0.026	9.167	94.431
100yr 24hr 10min Chicago	13000	Outflow	0.083	104.59	6.94	9.333	58.387
100yr 24hr 10min Chicago	1201	Outflow	0.083	0.32	0.133	9.167	92.465
100yr 24hr 10min Chicago	4	Outflow	0.083	104.91	6.996	9.333	58.491
100yr 24hr 10min Chicago	12001	Outflow	0.083	104.91	7.005	9.333	58.491
100yr 24hr 10min Chicago	1200	Outflow	0.083	0.24	0.099	9.167	96.049
100yr 24hr 10min Chicago	12000	Outflow	0.083	105.15	7.051	9.333	58.576

100yr 24hr 10min Chicago	1101	Outflow	0.083	0.19	0.081	9.167	94.214
100yr 24hr 10min Chicago	3	Outflow	0.083	105.34	7.084	9.333	58.641
100yr 24hr 10min Chicago	11001	Outflow	0.083	105.34	7.086	9.333	58.641
100yr 24hr 10min Chicago	1100	Outflow	0.083	0.05	0.022	9.167	93.007
100yr 24hr 10min Chicago	11000	Outflow	0.083	105.39	7.094	9.333	58.657
100yr 24hr 10min Chicago	1001	Outflow	0.083	9.07	3.081	9.167	88.882
100yr 24hr 10min Chicago	2	Outflow	0.083	114.46	8.935	9.333	61.052
100yr 24hr 10min Chicago	10001	Outflow	0.083	114.46	8.913	9.333	61.052
100yr 24hr 10min Chicago	1000	Outflow	0.083	0.14	0.059	9.167	94.086
100yr 24hr 10min Chicago	1	Outflow	0.083	114.6	8.938	9.333	61.092

Appendix I
Structure Photo Inventory Record

Fenelon Falls
Community Centre

14249
Danger
High Voltage
Keep Off
Haute tension
Ne pas
approcher

Appendix J
HEC-RAS Output

Fenelon Falls South Floodplain

0 40 80 160 240 320
Meters

1:10,000

N

Fenelon Falls Watershed
Floodplain
Watercourse
Spill

Road Classification
Highway
County Road
Local Street

KAWARTHA CONSERVATION

City of KAWARTHA LAKES

This map is for information purposes only and the Kawartha Conservation takes no responsibility for, nor guarantees, the accuracy of the information contained within the map. Prepared by Kawartha Conservation: April 2023. Produced using information provided by the Ministry of Natural Resources, Kawartha Conservation and other municipal sources. Copyright (c) Queen's Printer, 2023.

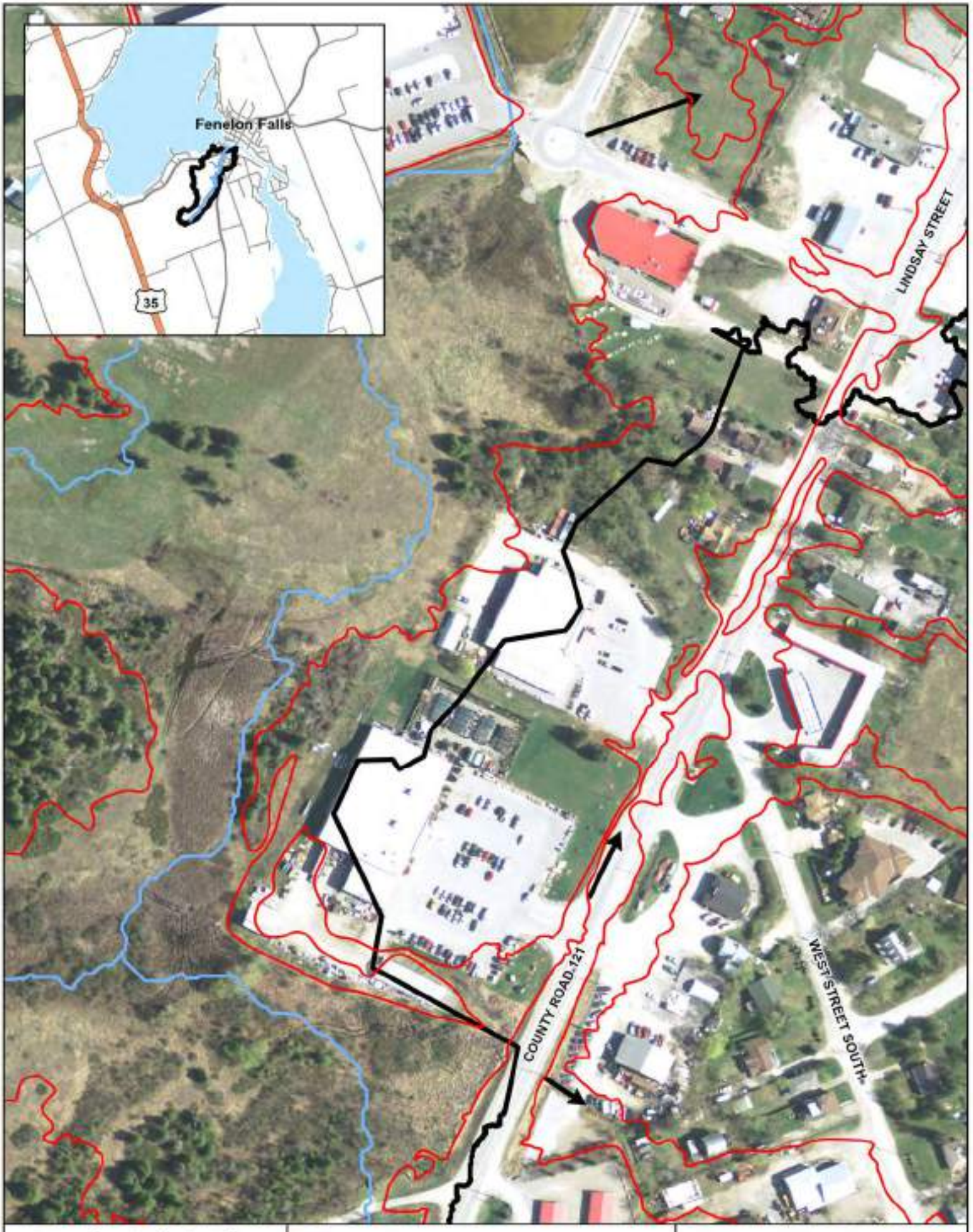

Fenelon Falls South
County Road 121 Spill

Floodplain
Fenelon Falls Watershed
Watercourse
Spill

Road Classification
Highway
County Road
Local Street

0 5 10 20 30 40
Meters

1:2,000

N

KAWARTHA CONSERVATION

City of KAWARTHA LAKES
Catch the Kawartha spirit

This map is for information purposes only and the Kawartha Conservation takes no responsibility for, nor guarantees, the accuracy of the information contained within the map. Prepared by Kawartha Conservation: April 2023. Produced using information provided by the Ministry of Natural Resources, Kawartha Conservation and other municipal sources. Copyright (c) Queen's Printer, 2023.

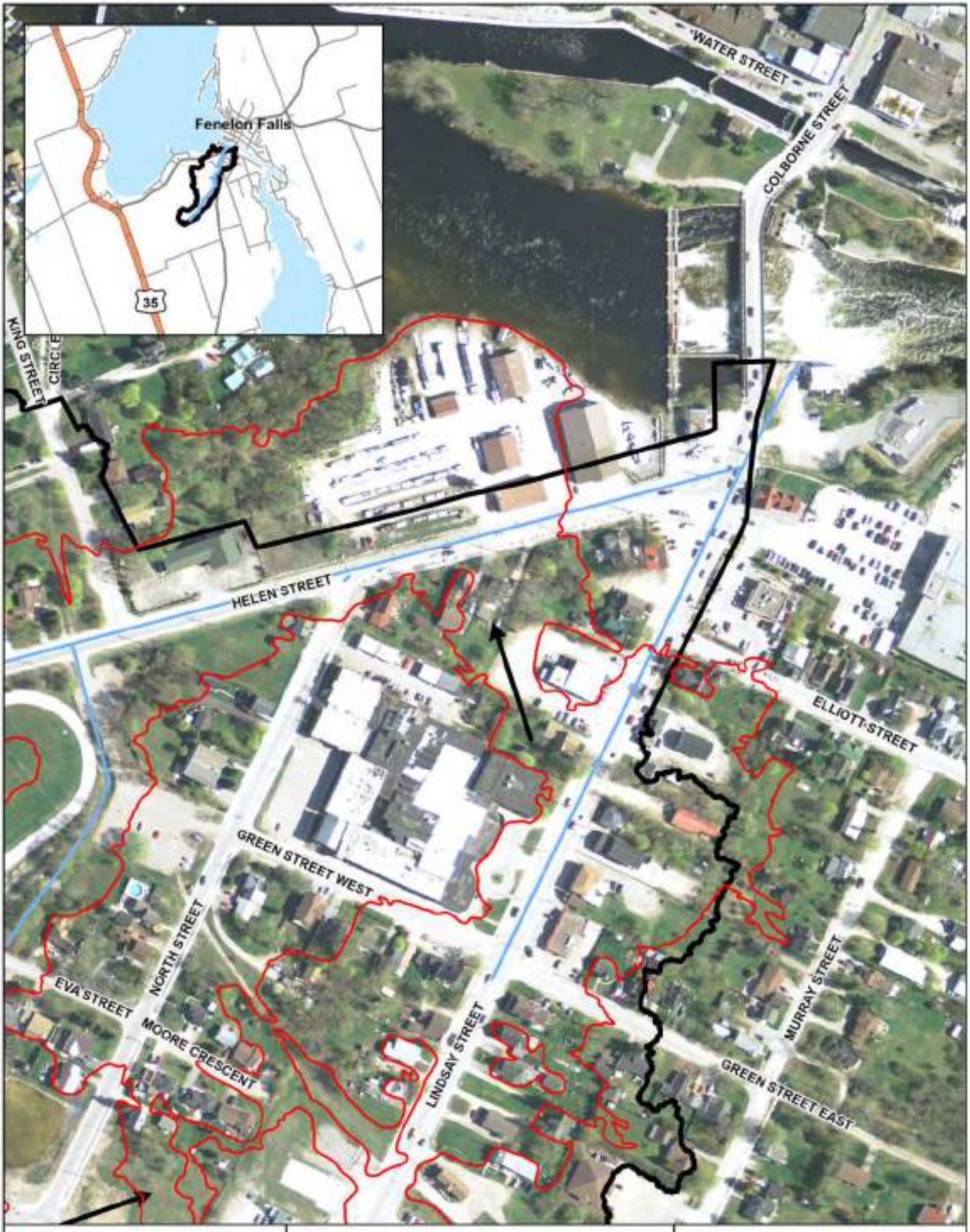

Fenelon Falls South
Lindsay St Spill

Floodplain
Fenelon Falls Watershed
Watercourse
Spill

Road Classification
Highway
County Road
Local Street

0 10 20 40 60 80
Meters
1:2,500
N

KAWARTHA CONSERVATION
Discover · Protect · Restore

City of KAWARTHA LAKES
Catch the Kawartha spirit

This map is for information purposes only and the Kawartha Conservation takes no responsibility for, nor guarantees, the accuracy of the information contained within the map. Prepared by Kawartha Conservation: April 2023. Produced using information provided by the Ministry of Natural Resources, Kawartha Conservation and other municipal sources. Copyright (c) Queen's Printer, 2023.

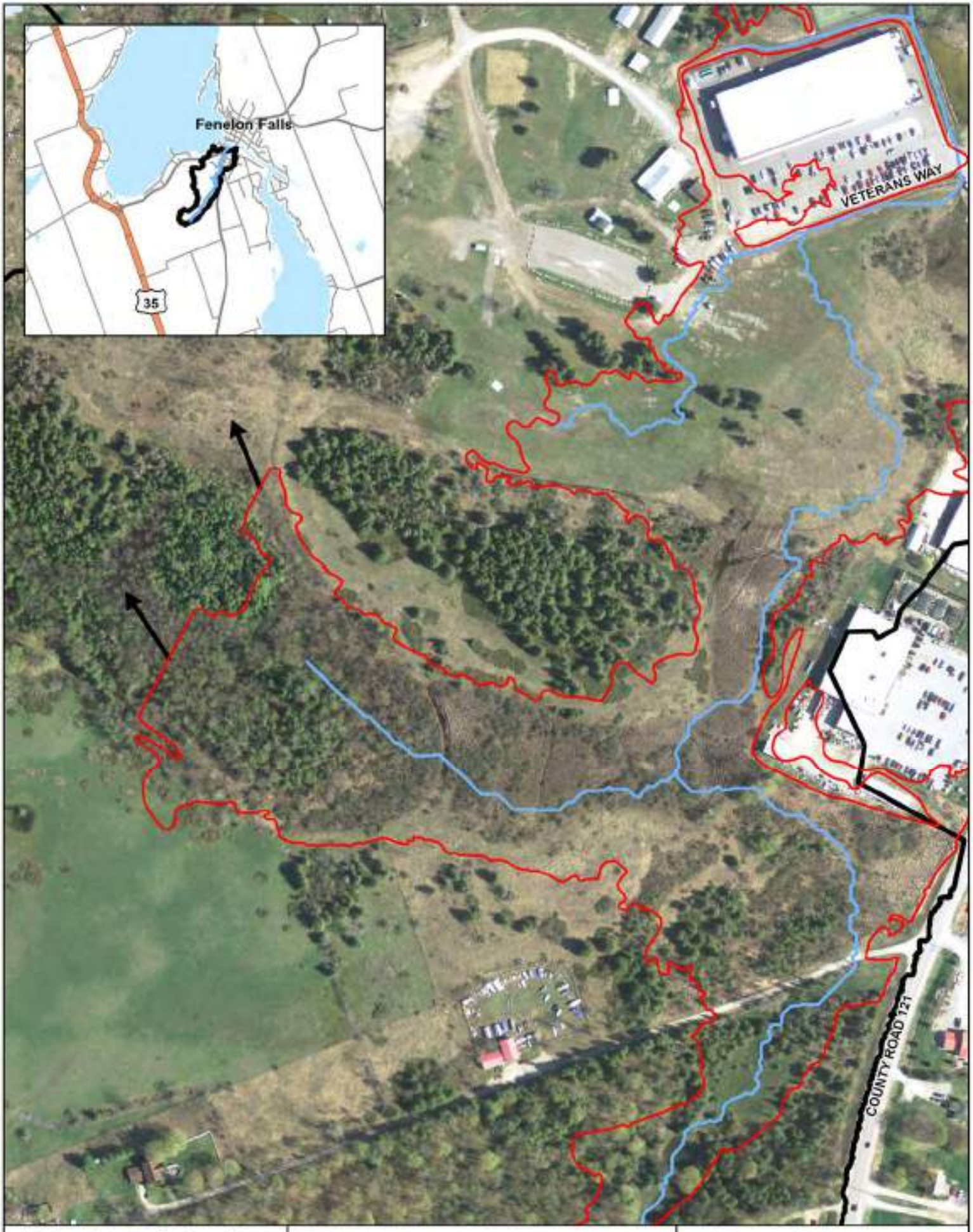

Fenelon Falls South
West Spill

0 10 20 40 60 80
Meters

1:2,750

N

Floodplain
Fenelon Falls Watershed
Watercourse
Spill

Road Classification
Highway
County Road
Local Street

KAWARTHA CONSERVATION
Discover · Protect · Restore

City of KAWARTHA LAKES
Catch the Kawartha spirit

This map is for information purposes only and the Kawartha Conservation takes no responsibility for, nor guarantees, the accuracy of the information contained within the map. Prepared by Kawartha Conservation: April 2023. Produced using information provided by the Ministry of Natural Resources, Kawartha Conservation and other municipal sources. Copyright (c) Queen's Printer, 2023.

Appendix K
Model Files

Model files can be requested from Kawartha Conservation. Please note that a data sharing agreement and associated fees may be required.

Contact Info
Email: planning@kawarthaconservation.com
Phone: 705-328-2271 (Ext 237, Flood Plain GIS/Mapping Technician)

Appendix L
Peer Review Correspondence

Greck Comments from June 26, 2023	GRCA Response from September 1, 2023	Greck Response from September 27, 2023	GRCA Response November 5, 2023
Flood Plain Mapping Study Report – Final Report Draft			
Section 5.1 • Please provide details on how Kawartha Conservation staff re-calculated the IDF parameters. For example, what equations or methodology was used for the re-calculation? • The Chicago storm IDF data in the VO6 model do not reflect the IDF curve values presented in Table 2.2. Please revise or clarify. • The total rainfall from the AES storm distributions in the VO6 model do not equate to the total rainfall depths presented in Table 2.3. Please revise or clarify.	• Discussion of IDF a, b, c calculations added, City of Kawartha Lakes Chicago Storm parameters from the 2021 Storm and Stormwater Infrastructure Guidelines were ultimately used instead of KRCA calculated values. Previous CoKL IDF values were determined to be incorrect during the previous study so KRCA values were used instead. • Chicago IDF values updated to reflect storms used in model • AES precipitation volumes are based on the rainfall volumes derived from the City of Kawartha Lakes Chicago Storm IDF parameters and are slightly more conservative than the observed rainfall volumes. Rainfall volume IDF table was removed to avoid confusion.	• Acknowledged. Comment no longer relevant. • Comment addressed. • Comment addressed. We noticed that the Chicago 100yr 6hr total rainfall of 81.42mm did not equate to the AES 100yr 6hr total rainfall of 80.81mm. We recommend verifying rainfall input parameters.	• Error was located in 6-hour AES storm distribution. Corrected in model, re-run, results updated.
Section 6.4 • Confirm that the Helen Street storm sewer catchments have not changed since the 2010 Valdor study and the subcatchment delineation reflects current conditions.	• No significant construction has occurred since 2010, so the Helen Street subcatchments from Valdor are the best available information.	• Comment addressed.	•
Section 6.11 • Please indicate the manning's roughness coefficient of 0.011 assigned to the right-of-way. • Justify the use of the manning's roughness coefficients assigned. This can be done by referencing technical guidelines.	• Please clarify. Manning's values of 0.011 were not used for channel routing in the hydrologic model. • Technical guideline reference added.	• Not addressed. For example, RouteChannel – 17001 in the VO model is assigned a Manning's n of 0.011. This appears to be assigned to the asphalt road. We recommend stating the Manning's n assigned to the asphalt road in the report. • Comment addressed.	• Discussion added to report for the use of 0.011 for asphalt.
Section 7.3 • We recommend completing a sensitivity analysis for catchment area, slope, flow length, impervious depression storage, and manning's roughness. • Please document that the Timmins event was only assessed for the sensitivity analysis and provide the reason why. • Please indicate the VO6 node that the sensitivity analysis is completed for.	• Sensitivity analysis was not conducted for physically-based parameters as they are known with certainty and are not subject to calibration • Sensitivity analysis was completed for Manning's roughness • Only the Timmins event was used for sensitivity analysis since the goal of the study is to determine the regulatory floodplain, and the Timmins Storm is an appropriate magnitude for analysis. • Node location added.	• Comment addressed. We still recommend a sensitivity analysis for the physical parameters, as there are inaccuracies associated with the LIDAR, soils, and land use data used. • Acknowledged. • Comment addressed. • Comment addressed.	• A sensitivity analysis has been completed for the requested parameters and has been run in both the hydrologic and hydraulic models. The results are included in the report.

Section 7.4 • Please provide CN* values in Table 4.1 for all NasHYDs and StandHYDs. • Please provide discussion and justification for the assigned impervious depression storage of 5mm for StandHYDs 2501, 2207, 2204, and 2201. An impervious depression storage of 1mm was assigned to the remaining StandHYDs.	• CN* values were added to table • All StandHYDs now have an impervious depression storage volume of 1 mm. 5mm value was due to nodes being converted from NasHYD to StandHYD.	• Comment addressed. • Comment addressed.	•
Section 8.1 • Discuss in more detail the reason for the large differences for the “U/S of Canadian Tire” and “Western external area” Key Nodes reported in Table 5.1.	• Discussion added to clarify the differences.	• Comment addressed.	•
Section 8.2 • Please provide the corresponding VO6 node for the Kawartha Conservation flow rates reported in Table 5.2 and 5.4. • Provide discussion on why the Valdor and the Kawartha Conservation flow rates reported in Table 5.2 and 5.4 may differ.	• VO6 nodes added to both tables • Discussion added.	• Comment addressed. • Comment addressed.	•
Section 8.3 • The text appears to incorrectly refer to the wrong table (Table 5.9). Please confirm or revise. • Clearly state the VO6 node that represents the watershed outlet.	• Table and figure numbers updated • Node name added	• Comment addressed. • Comment addressed.	•
Section 9.0 • The report states that the peak flow is maintained for “several hours” to produce quasisteady state results”. Please be specific. • Is there a reason to the shape of the proposed unsteady state hydrograph inputs? There is a sharp increase in flows within an hour. Please document the reasoning in the report. • Provide discussion on how the Energy Gradeline slope was determined for each flow hydrograph.	• Description of steady flow duration added. • As discussed, the rising limb of the unsteady hydrograph was maintained to show how the inundation progresses to the peak • Energy slope at upstream boundaries is discussed in the boundary conditions section	• Comment addressed. • Comment addressed. • Acknowledged. The report states that the ground slope is “measured 10m upstream of the boundary condition line to 10m downstream”. It is unclear if the slope was estimated from 10m upstream of the upstream boundary condition to 10m downstream of the downstream boundary condition. We recommend providing further clarification in the report.	• Wording updated to be more clear.
Section 10.0 • Please summarize flow analysis computational settings and the variable time step courant number method inputs. Please provide rationale for the inputs and the variable time step computation.	• Added Section 10.6 to discuss simulation details	• Comment addressed.	•
Section 10.2 • Please include a column in Table 7.1 summarizing the Manning’s n assigned for each HEC-RAS structure. • The Helen Street culvert is reported to have a diameter of 680mm, however the culvert is modelled to be a 675mm diameter. Please revise.	• Manning’s n column added to table • Culvert diameter updated in model	• Comment addressed. • Comment partially addressed. The Helen Street culvert indicates a manning’s roughness coefficient of 0.013 in the HEC-RAS model, contrary to the manning’s roughness coefficient of 0.024 that Table 7.1 reports. Please revise to ensure consistency.	• Report updated to reflect concrete pipe rather than CSP

Section 10.3 • The report states that “the land use categories were simplified to developed – low intensity, agricultural, and impervious areas”. In addition to this, we recommend including an industrial/institutional/commercial area layer and a forested area layer. • The report states that “all forested areas in the study area were classified as agricultural, so no forest cover was modelled”. We do not recommend this simplification as forested areas are typically assigned a higher Manning’s n than agricultural lands. • The reports state that a Manning’s n of 0.035 was used for agricultural area, however, the model uses a more appropriate Manning’s n of 0.05. Please revise the Manning’s n reported to 0.05.	• Industrial, institutional, and commercial areas were not present in the Official Plan used to define land use, so they were not included. • Classifying forests as agricultural was not a simplification, but is based on full OP build-out, where all existing forest areas are classified as agriculture. • Manning’s n updated in report	• Acknowledged. Comment addressed. • Acknowledged. Comment addressed. • Comment addressed.	•
Section 10.5 • Please explain how the Cameron Lake WSEL was determined. • We note that in Section 4.4, the Cameron Lake 100-year lake level is reported to be 255.75m, however the downstream boundary condition for Cameron Lake is assigned a water surface elevation of 255.78 in the HEC-RAS model. Please revise for consistency. • Is there available 100-year water level data downstream of the dam? Please confirm. • Please provide rationale for the stage hydrograph (of 256.5m) assigned to the “Spill” boundary condition for the 100-year 24-hour Chicago plan instead of a normal depth.	• Cameron Lake discussion added • Level adjusted to 255.75 m in the model • Fenelon River discussion added • Spill boundary condition changed to normal depth; discussion added	• Acknowledged. We recommend providing the data source of the Cameron Lake WSEL in the report e.g: water level monitor and location. • Comment addressed. • Comment addressed. • Comment addressed.	• Discussion added stating that the elevation was obtained from the Valdor report. It is not known how this elevation was obtained.
Section 11.2 • Provide a Table summarizing the water surface elevation increase at certain points of interest throughout the floodplain and highlight areas of significant flooding. • Assess hydraulic model sensitivity to flow based on the results of the hydrology model sensitivity analysis.	• In-depth sensitivity analysis was not performed because calibration was not possible, so budget was allocated elsewhere.	• Comment not addressed. We recommend highlighting more points of interest besides Helen Street. We would recommend reporting the increase in water surface elevation at the watercourse crossings or areas of significant water surface elevation increase. • Comment not addressed. We recommend increasing flows based on the flows from the hydrology model sensitivity analysis, for input into the hydraulic modelling sensitivity analysis.	• Many additional points of interest have been added to the sensitivity analysis for both the hydrology and hydraulic analysis.
Section 12.1 • Is Valdor’s model a 1-D or 2-D model. Please state this explicitly. • The flow inputs differ due to the updated hydrology model. Subcatchment inflows, channel routing, and storage properties are modelled differently due to steady-state (1-D) vs unsteady modelling (2-D). We recommend incorporating this discussion in Section 12.2.	• 1D vs 2D discussion added • Discussion added	• Comment addressed. • Comment addressed.	•
Section 12.2	• Discussion added	• Comment addressed.	•

• Discuss and highlight the difference in the floodplain extents between the Valdor and Kawartha Conservation's model.			
Section 12.3 • Report the depths and velocity of spill. • Assess safe ingress and egress.	Depths, velocities, and safe access discussion added	• Comment partially addressed. For the west spill, we recommend reporting where the spill is directed towards (i.e. another watercourse, Cameron Lake..etc). • Comment addressed.	• Discussion added.
Figure 9.1 • Provide Figure 9.1. It appears to be missing in the body of the draft report.	Figure numbers and cross-references updated	• Comment addressed.	•
Figures 9.2, 9.3, 9.4 • Show spill arrows, show watercourse centerline, label where spill exits and re-enters the watershed, show direction of flow for the watercourse, label water surface elevations. • The Lindsay Street spills eventually re-enter the watershed however the spill direction and the locations of re-entry are not entirely clear. Please clearly indicate the flow direction of these spills and where it re-enters the watershed for all spill and re-entry locations.	• Figures updated, spill arrows and watercourse centerline added	• Comment partially addressed. We recommend labelling and adding a note where spill exits and re-enters the watershed. We recommend revising the legend to indicate the "100-year" water surface elevation. We recommend adding LIDAR contour elevations and 100-year water surface spot elevations.	• We have included all the delineated floodplains including the spills in the regulatory floodplain to be conservative. We have included a spill arrow to show where the Lindsay Street inundation joins the primary flowpath. The floodplain is no longer based on just the 100-year storm as the Timmins had greater floodplain extents in the upper reaches, so the layer will be called the Regulatory Floodplain. LiDAR contour elevations and spot elevations are included in the Floodplain Maps as the map is not legible at the report scale.
Section 13.1 • Summarize the results: discuss the results of the floodplain mapping, highlight high risk areas, and show many properties are in the Flood Hazard. • Discuss locations of spill.	Discussion added.	• Comment partially addressed. We recommend indicating that the 100-year storm is considered to be Regulatory storm event as it is larger than the Timmins Storm. • Comment addressed.	• Discussion added.
Section 13.2 • Recommend flow monitoring for future model calibration. • Recommend future considerations for climate change. • Recommend that spill determined from this study is accounted for in future floodplain mapping studies for the adjacent watercourses. • Provide high level floodproofing recommendations for development in the area.	Added recommendations	• Comment addressed. • Comment addressed. • Comment addressed. • Comment addressed.	•
Section 14 • The title of Appendix B is reported to be "Modeling Parameters Selection", however the provided Appendix B is titled "Study Terms of Reference". Please revise for consistency.	Appendix references updated in the report	• Comment addressed.	•
Appendix D – Subcatchment Maps • The bottom disclaimer appears to be for another project. Please ensure that the disclaimer is relevant to this project. • The Fenelon Falls Watershed and Subcatchments line weights, style, and colour are very similar on the Figures. We recommend making the two lines more distinguishable. • On the subcatchment map, please show flow nodes, flow length, and watercourse centerlines.	• Disclaimer corrected for all maps • Distinction made between the watershed and subcatchment boundaries • Flow nodes, flow length and water course added to subcatchment map • Watercourse and spill added to watershed map	• Comment addressed. • Comment addressed. • Comment partially addressed. The intent of the original comment regarding the flow length was to show the line work as to how the flow length was measured. We recommend showing the flow length linework on the subcatchment map and labelling the names of the flow nodes.	• Additional figure added that shows the longest flow length used for Time of Concentration calculations with labels showing flow lengths • Spill arrows have been corrected

• On the watershed map, please show the watercourse centerlines and areas of spill.		• Comment partially addressed. There appears to be drafting issues for the spill arrows provided in the Floodplain map. Please revise. See the highlighted areas in orange below. 	
Appendix J – HEC-RAS Output • Please show watercourse centrelines. • Please show spill areas. • The road classification linework appears to be missing. If no road classification linework is proposed, please remove them from the legend.	• Watercourse added • Spill arrows added • Road classification linework is present in the inset map so should remain in the legend	• Comment not addressed. Appendix J appears to not have been updated since the last submission. • Comment not addressed. Appendix J appears to not have been updated since the last submission. • Acknowledged.	• Updated figure, new version produced in August but was mistakenly not included in the peer-review submission.

Hydraulic Model Comments

Greck Comments from June 26, 2023	GRCA Response from September 1, 2023	Greck Response from September 27, 2023	
Please assign breaklines along the edges for all channels and roads. Please note that the breaklines should be approximately placed along the left and right bank of the channel, and the left and right edges of the road.	Bottom of bank breaklines are not appropriate for a small channel.	Comment not addressed. Incorporating breaklines into the 2D mesh is standard practice and critical in 2D modelling to accurately account for the transfer of water between channel and floodplain. We recommend assigning breaklines along the edges for all channels and roads.	Channel centreline breaklines and road centreline breaklines have been added to the model and enforced. This placement will ensure that the road crest and channel bottom are represented along mesh edges to prevent “bleeding” through higher elevation areas.
Please enforce all culvert crossings as breaklines in the 2D flow area.	Culvert crossings enforced where an embankment was present. Breaklines were not enforced for extended buried sections adjacent to Eva St and Helen St.	We recommend providing justification in the report why the Eva St and Helen St culvert crossings were not enforced. We recommend enforcing culvert crossings into the 2D flow area regardless of length.	Discussion added to justify not using breaklines for Eva and Helen St crossings. Breakline is used for the centreline of Helen Street rather than an arbitrary crossing location required by HEC-RAS for crossings.
Please revise the downstream boundary condition for Fenelon River and Cameron Lake such that it covers the entirety of the floodplain and spill draining to it.	Boundary conditions revised to cover entirety of floodplain draining to it	Comment addressed.	
There doesn’t appear to be a boundary condition associated with the boundary condition line of 11000-14. Please confirm.	Flow hydrographs were defined for boundary line 11000-14 for all scenarios in the provided model.	Comment addressed.	
It appears that the extent of the floodplain is still rising and expanding beyond the assigned 12 hour and 14 hour simulation time for the Timmins and 100-year scenarios respectively. Please extend the simulation time of the Timmins and 100-year scenario such that a steady state floodplain is achieved (i.e. the floodplain does not continue to change).	Model is largely stable at 14 hours except for very small areas. Simulation time extended to 16 hours for both runs.	Comment not addressed. It appears that the floodplain mapping is still increasing in small areas. We recommend extending the simulation time of the Timmins and 100-year scenario such that a steady state floodplain is achieved (i.e. the floodplain does not continue to change).	The 100-year model was run for 72 hours to eliminate changes in the floodplain and ensure that the regulatory floodplain delineation is based on a steady state condition. The main portions of the floodplain stabilized within 16 hours, so all sensitivity runs were run for that length to determine water surface elevations at key nodes but were not run long enough to fully stabilize at some areas at the fringes of the floodplain.
An entrance loss coefficient of 0.5 has been assigned to all circular culverts. This is only appropriate for culverts with headwalls. Should the circular culverts be projecting from fill then an entrance loss coefficient	Entrance loss coefficient updated for CSPs, but maintained for the concrete box culvert crossing CR121 and the concrete Helen St storm sewer	Comment addressed.	

of 0.9 should be assigned instead. From aerial imagery and Google streeview, the culverts appear to be mostly projecting from fill. Please confirm.			
The only geometry file provided has the Manning's n values reflecting the sensitivity analysis scenario. Please confirm. Separate geometry files should be developed for the sensitivity analysis scenario and the base scenario.	Manning's n were adjusted for the sensitivity analysis run, but time was not allocated for detailed sensitivity analysis, so values were reverted to their initial values and no additional geometry files were created.	Acknowledged.	

Hydrology Model Comments

Greck Comments from June 26, 2023	GRCA Response from September 1, 2023	Greck Response from September 27, 2023	
The area delineated below appears to be draining towards Catchment 2700. Please confirm. 	The identified area does not drain to catchment 2700 based on the DTM and the flow accumulation grid.	The contours from the DTM and Google Streetview show that the delineated area drains towards Catchment 2700 via the County Road 121 roadside ditch. We recommend incorporating this area into catchment 2700 in the hydrology model. 	Subcatchment 2700 has been updated to include the highlighted area, with adjustments based on the flow accumulation grid and consideration of the driveway culverts.
There appears to be missing contours here (see below). Please confirm and clarify how Catchment	Details of the delineation were included in Section 6.4: Subcatchment	Acknowledged. We recommend listing the catchments from the 2010 Valdor study that were not delineated using LIDAR in Section 3.4 of the report.	List of subcatchment delineation data sources added.

2601, 2204, 2206, 2207, 2205, 1902 were delineated. 	Discretization. Boundaries outside of the LiDAR area were obtained from the 2010 Valdor study		
There appears to be a culvert crossing here which may convey additional drainage east to west across County Road 121/Lindsay Street towards Catchment 2700 (see below). Please confirm. 	The terrain slopes to the east which would prevent flows from moving east to west.	Comment addressed.	
The area below may drain to the County Road 121/Lindsay Street storm sewer which may drain northeast to Catchment 1001 (see below). Please confirm. 	The identified area drains to the east and does not contribute to the Lindsay Street sewer based on LiDAR information	The contours on the floodplain mapsheets suggest that the Lindsay Street roadways (north of the Canadian Tire) drain north towards Catchment 1001. We recommend checking the contours or reviewing as-built drawings (if available) and reconsider incorporating this urban area to Catchment 1001.	Contours, driveway ditches, and the flow accumulation grid were used to adjust the subcatchments. There is no flowpath from the highlighted area to subcatchment 1001, so it was not modified. Most of the Canadian Tire property was found to flow south and was added to subcatchment 2700. Other areas drain to the east across Lindsay Street according to the flow accumulation grid.

Draft Floodplain Maps

Floodplain maps will be produced by KRCA

Greek Comments from June 26, 2023	Greek Response from September 27, 2023
Sturgeon Lake is labelled as the waterbody to the east of Colborne Street. However, this waterbody is referred to as Fenelon River in the body of the report. Please revise the floodplain maps to be consistent.	Comment addressed.
We recommend that a light transparent fill be applied to the floodplain area such that the areas within the floodplain are clearer.	Comment addressed.
We recommend that no contours go overtop buildings.	Recommendation was not followed. No action required.
The 1.0m interval LIDAR contours are very prominent in the drawings especially in areas with great elevation changes. We would recommend using a lighter colour or a smaller line weight for better readability.	Comment addressed.
Clearly indicate all culvert crossings. We recommend incorporating symbols and providing them in the legend.	Comment addressed.
The Cameron Lake label is in all caps while the Sturgeon Lake label is not. Please revise such that the labels are consistent.	Comment addressed.
There are some contours that are present with waterbodies of Cameron Lake and Sturgeon Lake. These should be removed.	Comment addressed.
The cross-section numbering label extension line weight appears to be thicker than what is shown on the legend. Please revise such that the label extension line weight is consistent with what is presented in the legend.	Comment addressed.
The reported Regional Water Level text should be moved down slightly such that there is no text overlap between the text and the divider line on the cross-section label.	Comment not addressed as there is still text overlap. We recommend revising all labels to avoid text overlap.
The cross-section numbering label does not have the cross-section numbers reported. We recommend this be renamed to Flood Elevation Point Label Legend or something more indicative of the information it's presenting in the legend.	Comment addressed.

New Comments

Greek New Comments from September 26, 2023	
Flood Plain Mapping Study Report – Final Report Draft dated July 2023	
Table of Contents • We recommend formatting the table of contents such that all page numbers are aligned to the right side of the page and that the spacing between sections are consistent.	Updated.
Section 1.5 • The report mentions a Hydrology Modeling Parameters Section document provided in Appendix B. However, this appears to be provided in Appendix E. Please revise.	Report revised, references to hydrology parameters in Appendix B removed.
Section 3.1 • There are no parameters or modelling approach recommendations provided in Appendix B. Please revise.	Report revised.
Section 4.4 • The time to peak values for the NASHYDs is incorrect as there is an error in the time to peak calculations in the "TpCalculations.xlsx" spreadsheet. The slope used in the time to peak calculations for the Bransby and Airport method are 100 times what they should be. Please revise the Bransby and Airport equations used to calculate time of concentration. 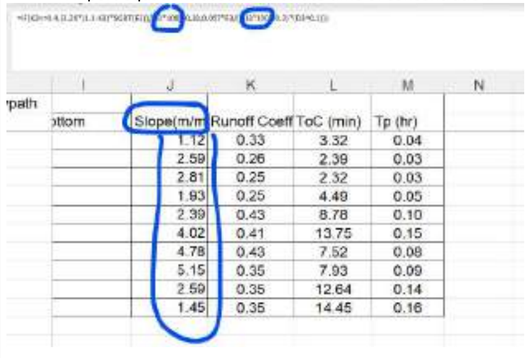 I J K L M N 'path ottom Slope(m/m Runoff Coeff ToC (min) Tp (hr) 1.12 0.33 3.32 0.04 2.59 0.26 2.39 0.03 2.81 0.25 2.32 0.03 1.93 0.25 4.49 0.05 2.39 0.43 8.78 0.10 4.02 0.41 13.75 0.15 4.78 0.43 7.52 0.08 5.15 0.35 7.93 0.09 2.59 0.35 12.64 0.14 1.45 0.35 14.45 0.16	Slope recalculated, Tp calculations revised, updated in VO, model re-run, updated in HEC-RAS, model re-run, results updated.
Appendix D • We recommend revising the Country Road 121, Lindsay Street, and West Spill figures to only show spill arrows pertaining to that particular spill location the figure is referring to, to avoid confusion. We recommend revising the	Figures updated to only show spill arrows for the spill being shown.

legend to indicate the “100-year” water surface elevation. We recommend adding LIDAR contour elevations and 100-year water surface spot elevations.	
Appendix M • We recommend renaming Appendix M to “Digital Elevation and Orthoimagery Quality Check”	Updated.
Appendices • Please provide the full set of Appendices for review in the next submission.	
Hydraulic Modelling	
We recommend adding a normal depth boundary condition for the spill area to the west. 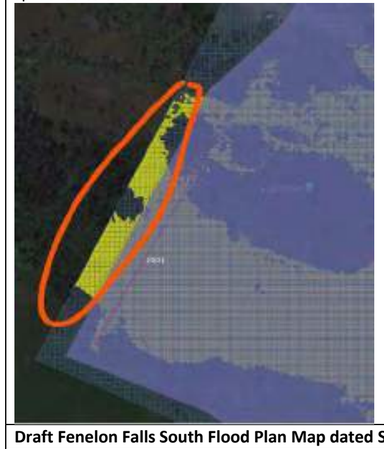	Boundary Condition added using normal depth based on ground slope in inundated area.
Draft Fenelon Falls South Flood Plan Map dated September 2023	
We recommend extending floodplain limits to the extents of the Fenelon Falls South Tributary	Tributary has been adjusted so that it does not extend beyond the floodplain.

This appears to be an ineffective flow area. The floodline elevation should be consistent here and should not be moving across contours. We recommend revising the floodplain delineation. 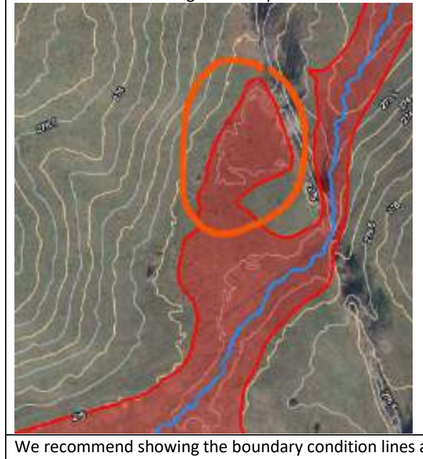	This area is no longer present in updated floodplain.
We recommend showing the boundary condition lines and tributary centerlines. This would make the following floodplain areas look less awkward.	Drainage Line has been updated to include all modelled tributaries.

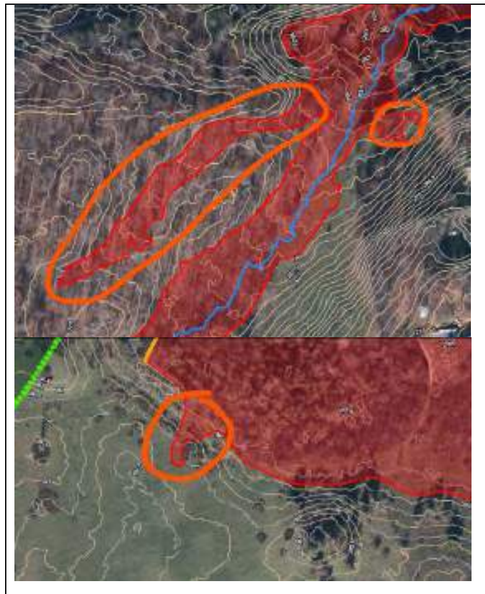

Flood Plain Mapping Study Report – Final Report Draft

Greck Comments from June 26, 2023	GRCA Response from September 1, 2023	Greck Response from September 27, 2023	GRCA Response November 5, 2023	Greck Response from November 15, 2023	GRCA Response November 16, 2023
Section 10.2 • The Helen Street culvert is reported to have a diameter of 680mm, however the culvert is modelled to be a 675mm diameter. Please revise.	• Culvert diameter updated in model	• Comment partially addressed. The Helen Street culvert indicates a manning's roughness coefficient of 0.013 in the HEC-RAS model, contrary to the manning's roughness coefficient of 0.024 that Table 7.1 reports. Please revise to ensure consistency.	• Report updated to reflect concrete pipe rather than CSP	• The manning's roughness coefficient of 0.024 should be assigned to the CSP Helen Street culvert. Please revise or provide rationale.	• Comment was addressed in the GRCA responses from November 5 included in the appendix

Greck New Comments from September 26, 2023	GRCA Response November 5, 2023	Greck Response from November 15, 2023	GRCA Response November 16, 2023
Table of Contents • We recommend formatting the table of contents such that all page numbers are aligned to the right side of the page and that the spacing between sections are consistent.	• Updated.	• Recommendation not followed.	• All numbers have been aligned to the right side.
Section 4.4 • The time to peak values for the NASHYDs is incorrect as there is an error in the time to peak calculations in the "TpCalculations.xlsx" spreadsheet. The slope used in the time to peak calculations for the Bransby and Airport method are 100 times what they should be. Please revise the Bransby and Airport equations used to calculate time of concentration. I J K L M N 'path ottom Slope(m/m) Runoff Coeff TcC (min) Tp (hr) 1.12 0.33 3.32 0.04 2.59 0.26 2.39 0.03 2.81 0.25 2.32 0.03 1.83 0.26 4.49 0.06 2.39 0.43 8.78 0.10 4.02 0.41 13.75 0.15 4.78 0.43 7.52 0.08 5.15 0.35 7.93 0.09 2.59 0.35 12.64 0.14 1.45 0.35 14.45 0.16	• Slope recalculated, Tp calculations revised, updated in VO, model re-run, updated in HEC-RAS, model re-run, results updated.	• It appears that time to peak calculations have been revised. However, the provided "TpCalculations.xlsx" spreadsheet has not been updated. Please provide the spreadsheet for review.	• The TpCalculations spreadsheet has been updated to include the new area value for subcatchment 2700 which did not have did not have a significant impact on the calculations or peak flows.
Appendices • Please provide the full set of Appendices for review in the next submission.		• Recommendation not followed. There are still missing Appendices in the report.	• Valdor report was added to background report appendix section. Rainfall data was added to rainfall section.

Greck New Comments from November 15, 2023	GRCA Response November 16, 2023
Section 4.4 Table 4-1 • The area for Catchment 2700 and the time to peak values for all NASHYDs reported in Table 4-1 appear to be outdated. Please ensure that Table 4-1 reflects the latest values in the model.	The parameters for catchment 2700 have been updated. The time to peak for other NASHYDs was correct.

Hydraulic Model Comments

Greck Comments from June 26, 2023	GRCA Response from September 1, 2023	Greck Response from September 27, 2023	GRCA Response November 5, 2023	Greck Response from November 15, 2023	GRCA Response November 16, 2023
Please assign breaklines along the edges for all channels and roads. Please note that the breaklines should be approximately placed along the left and right bank of the channel, and the left and right edges of the road.	Bottom of bank breaklines are not appropriate for a small channel.	Comment not addressed. Incorporating breaklines into the 2D mesh is standard practice and critical in 2D modelling to accurately account for the transfer of water between channel and floodplain. We recommend assigning breaklines along the edges for all channels and roads.	Channel centreline breaklines and road centreline breaklines have been added to the model and enforced. This placement will ensure that the road crest and channel bottom are represented along mesh edges to prevent "bleeding" through higher elevation areas.	Comment partially addressed. Breaklines have now been incorporated for the roads. However, breaklines have not been assigned to the channels. We would still recommend the application of the breaklines to define the channel top of banks.	• Channel breaklines are included in all locations where a clear channel can be identified, which includes the channels in the urban areas. We have used a much finer mesh than what is recommended to provide the necessary precision at the top of bank (i.e. HEC-Ras recommends starting with a 30m mesh, we have used a 2m mesh). The use of multiple breaklines in close proximity creates mesh inconsistencies unless the breakline cell spacing is decreased significantly which will increase computation time. Since both the channel and overbank areas are inundated, the additional breaklines are unlikely to improve the accuracy of the results.
It appears that the extent of the floodplain is still rising and expanding beyond the assigned 12 hour and 14 hour simulation time for the Timmins and 100-year scenarios respectively. Please extend the simulation time of the Timmins and 100-year scenario such that a steady state floodplain is achieved (i.e. the floodplain does not continue to change).	Model is largely stable at 14 hours except for very small areas. Simulation time extended to 16 hours for both runs.	Comment not addressed. It appears that the floodplain mapping is still increasing in small areas. We recommend extending the simulation time of the Timmins and 100-year scenario such that a steady state floodplain is achieved (i.e. the floodplain does not continue to change).	The 100-year model was run for 72 hours to eliminate changes in the floodplain and ensure that the regulatory floodplain delineation is based on a steady state condition. The main portions of the floodplain stabilized within 16 hours, so all sensitivity runs were run for that length to determine water surface elevations at key nodes, but were not run long enough to fully stabilize at some areas at the fringes of the floodplain.	Comment not addressed. It appears that the floodplain mapping is still increasing in small areas. We recommend extending the simulation time of the Timmins and 100-year scenario such that a steady state floodplain is achieved (i.e. the floodplain does not continue to change).	• No changes are present in the 100-year floodplain after 72 hours, but changes are present in the Timmins and sensitivity analysis run which were run for 16 hours in order to meet project deadlines. Due to project deadlines, some runs were run in GeoHEC-RAS and other runs were completed using the exported model. To view the results in HEC-RAS, all runs that were completed in GeoHEC-RAS will have to be re-run in HEC-RAS. To demonstrate that the 100y 24h Chicago storm reached a steady state in the hydraulic model, a video was produced of the GeoHEC-RAS results time series which is included in the Greck Peer Review\GeoHEC-RAS\Hydraulic Model 20231107 folder.

Hydrology Model Comments

Greck Comments from June 26, 2023	GRCA Response from September 1, 2023	Greck Response from September 27, 2023	GRCA Response November 5, 2023	Greck Response from November 15, 2023	GRCA Response November 16, 2023
The area delineated below appears to be draining towards Catchment 2700. Please confirm. 	The identified area does not drain to catchment 2700 based on the DTM and the flow accumulation grid.	The contours from the DTM and Google Streetview show that the delineated area drains towards Catchment 2700 via the County Road 121 roadside ditch. We recommend incorporating this area into catchment 2700 in the hydrology model. 	Subcatchment 2700 has been updated to include the highlighted area, with adjustments based on the flow accumulation grid and consideration of the driveway culverts.	It appears that hydrology area assigned to NHYD 2700 has increased from 5.04 to 6.38ha. Was this increase in area the result of the additional drainage area identified?	• Comment was addressed in the GRCA comments from November 5 included in the appendix

Draft Floodplain Maps

Floodplain maps will be produced by KRCA

Greck New Comments from November 15, 2023	GRCA Response November 16, 2023
These areas of floodplain does not appear to be delineated correctly as it shows floodplain moving uphill. Please clarify or revise the floodplain. 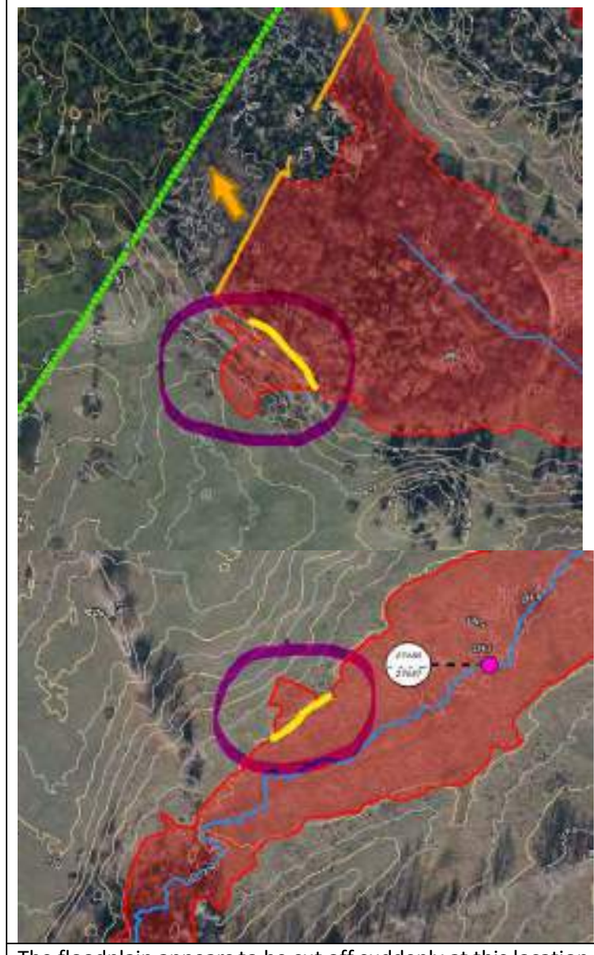	The floodplain was delineated correctly using the LiDAR-based DTM. The contours shown on the map do not appear to be in agreement with the LiDAR data.
The floodplain appears to be cut off suddenly at this location. Please revise.	This is the upstream limit of the reach. Flows are introduced here and can flow to any adjacent cells, so if that area is not inundated, it is because the terrain is higher there than where the flows were introduced. The apparent issue is likely due to the contours.

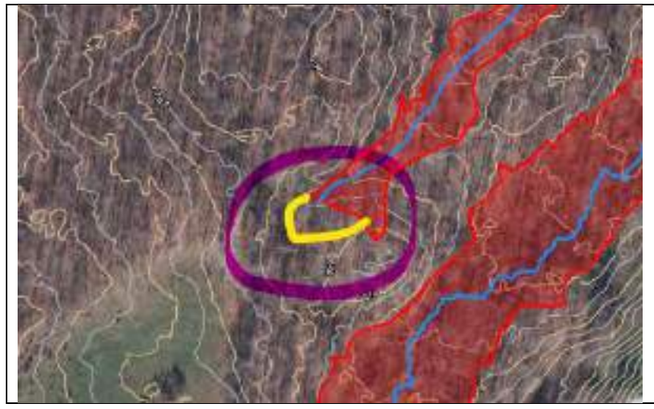

Greck Comments from June 26, 2023	GRCA Response
Flood Plain Mapping Study Report – Final Report Draft	
Section 5.1 • Please provide details on how Kawartha Conservation staff re-calculated the IDF parameters. For example, what equations or methodology was used for the re-calculation? • The Chicago storm IDF data in the VO6 model do not reflect the IDF curve values presented in Table 2.2. Please revise or clarify. • The total rainfall from the AES storm distributions in the VO6 model do not equate to the total rainfall depths presented in Table 2.3. Please revise or clarify.	• Discussion of IDF a, b, c calculations added, City of Kawartha Lakes Chicago Storm parameters from the 2021 Storm and Stormwater Infrastructure Guidelines were ultimately used instead of KRCA calculated values. Previous CoKL IDF values were determined to be incorrect during the previous study so KRCA values were used instead. • Chicago IDF values updated to reflect storms used in model • AES precipitation volumes are based on the rainfall volumes derived from the City of Kawartha Lakes Chicago Storm IDF parameters and are slightly more conservative than the observed rainfall volumes. Rainfall volume IDF table was removed to avoid confusion.
Section 6.4 • Confirm that the Helen Street storm sewer catchments have not changed since the 2010 Valdor study and the subcatchment delineation reflects current conditions.	• No significant construction has occurred since 2010, so the Helen Street subcatchments from Valdor are the best available information.
Section 6.11 • Please indicate the manning's roughness coefficient of 0.011 assigned to the right-of-way. • Justify the use of the manning's roughness coefficients assigned. This can be done by referencing technical guidelines.	• Please clarify. Manning's values of 0.011 were not used for channel routing in the hydrologic model. • Technical guideline reference added.
Section 7.3 • We recommend completing a sensitivity analysis for catchment area, slope, flow length, impervious depression storage, and manning's roughness. • Please document that the Timmins event was only assessed for the sensitivity analysis and provide the reason why. • Please indicate the VO6 node that the sensitivity analysis is completed for.	• Sensitivity analysis was not conducted for physically-based parameters as they are known with certainty and are not subject to calibration • Sensitivity analysis was completed for Manning's roughness • Only the Timmins event was used for sensitivity analysis since the goal of the study is to determine the regulatory floodplain, and the Timmins Storm is an appropriate magnitude for analysis. • Node location added.

Section 7.4 • Please provide CN* values in Table 4.1 for all NasHYDs and StandHYDs. • Please provide discussion and justification for the assigned impervious depression storage of 5mm for StandHYDs 2501, 2207, 2204, and 2201. An impervious depression storage of 1mm was assigned to the remaining StandHYDs.	• CN* values were added to table • All StandHYDs now have an impervious depression storage volume of 1 mm. 5mm value was due to nodes being converted from NasHYD to StandHYD.
Section 8.1 • Discuss in more detail the reason for the large differences for the "U/S of Canadian Tire" and "Western external area" Key Nodes reported in Table 5.1.	• Discussion added to clarify the differences.
Section 8.2 • Please provide the corresponding VO6 node for the Kawartha Conservation flow rates reported in Table 5.2 and 5.4. • Provide discussion on why the Valdor and the Kawartha Conservation flow rates reported in Table 5.2 and 5.4 may differ.	• VO6 nodes added to both tables • Discussion added.
Section 8.3 • The text appears to incorrectly refer to the wrong table (Table 5.9). Please confirm or revise. • Clearly state the VO6 node that represents the watershed outlet.	• Table and figure numbers updated • Node name added
Section 9.0 • The report states that the peak flow is maintained for "several hours" to produce quasisteady state results". Please be specific. • Is there a reason to the shape of the proposed unsteady state hydrograph inputs? There is a sharp increase in flows within an hour. Please document the reasoning in the report. • Provide discussion on how the Energy Gradeline slope was determined for each flow hydrograph.	• Description of steady flow duration added. • As discussed, the rising limb of the unsteady hydrograph was maintained to show how the inundation progresses to the peak • Energy slope at upstream boundaries is discussed in the boundary conditions section
Section 10.0 • Please summarize flow analysis computational settings and the variable time step courant number method inputs. Please	• Added Section 10.6 to discuss simulation details

provide rationale for the inputs and the variable time step computation.	
Section 10.2 • Please include a column in Table 7.1 summarizing the Manning's n assigned for each HEC-RAS structure. • The Helen Street culvert is reported to have a diameter of 680mm, however the culvert is modelled to be a 675mm diameter. Please revise.	• Manning's n column added to table • Culvert diameter updated in model
Section 10.3 • The report states that "the land use categories were simplified to developed – low intensity, agricultural, and impervious areas". In addition to this, we recommend including an industrial/institutional/commercial area layer and a forested area layer. • The report states that "all forested areas in the study area were classified as agricultural, so no forest cover was modelled". We do not recommend this simplification as forested areas are typically assigned a higher Manning's n than agricultural lands. • The reports state that a Manning's n of 0.035 was used for agricultural area, however, the model uses a more appropriate Manning's n of 0.05. Please revise the Manning's n reported to 0.05.	• Industrial, institutional, and commercial areas were not present in the Official Plan used to define land use, so they were not included. • Classifying forests as agricultural was not a simplification, but is based on full OP build-out, where all existing forest areas are classified as agriculture. • Manning's n updated in report
Section 10.5 • Please explain how the Cameron Lake WSEL was determined. • We note that in Section 4.4, the Cameron Lake 100-year lake level is reported to be 255.75m, however the downstream boundary condition for Cameron Lake is assigned a water surface elevation of 255.78 in the HEC-RAS model. Please revise for consistency. • Is there available 100-year water level data downstream of the dam? Please confirm.	• Cameron Lake discussion added • Level adjusted to 255.75 m in the model • Fenelon River discussion added • Spill boundary condition changed to normal depth; discussion added

• Please provide rationale for the stage hydrograph (of 256.5m) assigned to the "Spill" boundary condition for the 100-year 24-hour Chicago plan instead of a normal depth.	
Section 11.2 • Provide a Table summarizing the water surface elevation increase at certain points of interest throughout the floodplain and highlight areas of significant flooding. • Assess hydraulic model sensitivity to flow based on the results of the hydrology model sensitivity analysis.	• In-depth sensitivity analysis was not performed because calibration was not possible, so budget was allocated elsewhere.
Section 12.1 • Is Valdor's model a 1-D or 2-D model. Please state this explicitly. • The flow inputs differ due to the updated hydrology model. Subcatchment inflows, channel routing, and storage properties are modelled differently due to steady-state (1-D) vs unsteady modelling (2-D). We recommend incorporating this discussion in Section 12.2.	• 1D vs 2D discussion added • Discussion added
Section 12.2 • Discuss and highlight the difference in the floodplain extents between the Valdor and Kawartha Conservation's model.	• Discussion added
Section 12.3 • Report the depths and velocity of spill. • Assess safe ingress and egress.	Depths, velocities, and safe access discussion added
Figure 9.1 • Provide Figure 9.1. It appears to be missing in the body of the draft report.	Figure numbers and cross-references updated
Figures 9.2, 9.3, 9.4 • Show spill arrows, show watercourse centerline, label where spill exits and re-enters the watershed, show direction of flow for the watercourse, label water surface elevations. • The Lindsay Street spills eventually re-enter the watershed however the spill direction and the locations of re-entry are not entirely clear. Please clearly indicate the flow direction of	• Figures updated, spill arrows and watercourse centerline added

these spills and where it re-enters the watershed for all spill and re-entry locations.	
Section 13.1 • Summarize the results: discuss the results of the floodplain mapping, highlight high risk areas, and show many properties are in the Flood Hazard. • Discuss locations of spill.	Discussion added.
Section 13.2 • Recommend flow monitoring for future model calibration. • Recommend future considerations for climate change. • Recommend that spill determined from this study is accounted for in future floodplain mapping studies for the adjacent watercourses. • Provide high level floodproofing recommendations for development in the area.	Added recommendations
Section 14 • The title of Appendix B is reported to be “Modeling Parameters Selection”, however the provided Appendix B is titled “Study Terms of Reference”. Please revise for consistency.	Appendix references updated in the report
Appendix D – Subcatchment Maps • The bottom disclaimer appears to be for another project. Please ensure that the disclaimer is relevant to this project. • The Fenelon Falls Watershed and Subcatchments line weights, style, and colour are very similar on the Figures. We recommend making the two lines more distinguishable. • On the subcatchment map, please show flow nodes, flow length, and watercourse centerlines. • On the watershed map, please show the watercourse centerlines and areas of spill.	• Disclaimer corrected for all maps • Distinction made between the watershed and subcatchment boundaries • Flow nodes, flow length and water course added to subcatchment map • Watercourse and spill added to watershed map
Appendix J – HEC-RAS Output • Please show watercourse centrelines. • Please show spill areas.	• Watercourse added • Spill arrows added

• The road classification linework appears to be missing. If no road classification linework is proposed, please remove them from the legend.	• Road classification linework is present in the inset map so should remain in the legend

Hydraulic Model Comments

Greck Comment	**GRCA Response**
Please assign breaklines along the edges for all channels and roads. Please note that the breaklines should be approximately placed along the left and right bank of the channel, and the left and right edges of the road.	Bottom of bank breaklines are not appropriate for a small channel.
Please enforce all culvert crossings as breaklines in the 2D flow area.	Culvert crossings enforced where an embankment was present. Breaklines were not enforced for extended buried sections adjacent to Eva St and Helen St.
Please revise the downstream boundary condition for Fenelon River and Cameron Lake such that it covers the entirety of the floodplain and spill draining to it.	Boundary conditions revised to cover entirety of floodplain draining to it
There doesn't appear to be a boundary condition associated with the boundary condition line of 11000-14. Please confirm.	Flow hydrographs were defined for boundary line 11000-14 for all scenarios in the provided model.
It appears that the extent of the floodplain is still rising and expanding beyond the assigned 12 hour and 14 hour simulation time for the Timmins and 100-year scenarios respectively. Please extend the simulation time of the Timmins and 100-year scenario such that a steady state floodplain is achieved (i.e. the floodplain does not continue to change).	Model is largely stable at 14 hours except for very small areas. Simulation time extended to 16 hours for both runs.
An entrance loss coefficient of 0.5 has been assigned to all circular culverts. This is only appropriate for culverts with headwalls. Should the circular culverts be projecting from fill then an entrance loss coefficient of 0.9 should be assigned instead. From aerial imagery and Google streeview, the culverts appear to be mostly projecting from fill. Please confirm.	Entrance loss coefficient updated for CSPs, but maintained for the concrete box culvert crossing CR121 and the concrete Helen St storm sewer
The only geometry file provided has the Manning's n values reflecting the sensitivity analysis scenario. Please confirm. Separate geometry	Manning's n were adjusted for the sensitivity analysis run, but time was not allocated for detailed sensitivity analysis, so values were

files should be developed for the sensitivity analysis scenario and the base scenario.	reverted to their initial values and no additional geometry files were created.

Hydrology Model Comments

Greck Comment	**GRCA Response**
The area delineated below appears to be draining towards Catchment 2700. Please confirm. 	The identified area does not drain to catchment 2700 based on the DTM and the flow accumulation grid.
There appears to be missing contours here (see below). Please confirm and clarify how Catchment 2601, 2204, 2206, 2207, 2205, 1902 were delineated. 	Details of the delineation were included in Section 6.4: Subcatchment Discretization. Boundaries outside of the LiDAR area were obtained from the 2010 Valdor study
There appears to be a culvert crossing here which may convey additional drainage east to west across County Road 121/Lindsay Street towards Catchment 2700 (see below). Please confirm.	The terrain slopes to the east which would prevent flows from moving east to west.

The area below may drain to the County Road 121/Lindsay Street storm sewer which may drain northeast to Catchment 1001 (see below). Please confirm. 	The identified area drains to the east and does not contribute to the Lindsay Street sewer based on LiDAR information

Draft Floodplain Maps

Floodplain maps will be produced by KRCA

Greck Comment	GRCA Response
Sturgeon Lake is labelled as the waterbody to the east of Colborne Street. However, this waterbody is referred to as Fenelon River in the body of the report. Please revise the floodplain maps to be consistent.	
We recommend that a light transparent fill be applied to the floodplain area such that the areas within the floodplain are clearer.	
We recommend that no contours go overtop buildings.	
The 1.0m interval LIDAR contours are very prominent in the drawings especially in areas with great elevation changes. We would recommend using a lighter colour or a smaller line weight for better readability.	
Clearly indicate all culvert crossings. We recommend incorporating symbols and providing them in the legend.	
The Cameron Lake label is in all caps while the Sturgeon Lake label is not. Please revise such that the labels are consistent.	
There are some contours that are present with waterbodies of Cameron Lake and Sturgeon Lake. These should be removed.	
The cross-section numbering label extension line weight appears to be thicker than what is shown on the legend. Please revise such that the label extension line weight is consistent with what is presented in the legend.	
The reported Regional Water Level text should be moved down slightly such that there is no text overlap between the text and the divider line on the cross-section label.	
The cross-section numbering label does not have the cross-section numbers reported. We recommend this be renamed to Flood Elevation Point Label Legend or something more indicative of the information it's presenting in the legend.	

Appendix M
Digital Elevation and Orthoimagery Quality Check

Digital Terrain Model and Orthoimagery
Data Accuracy Assessment Report

Flood Plain Mapping Study – Fenelon Falls South

April 2023

1.0 Objective

The objective of this report is to assess and report the positional accuracy of the bare earth Base digital terrain model (Base DTM) and orthoimagery data for Fenelon Falls South flood plain mapping study.

2.0 Assessment Procedures

2.1 Test Data

All test data was acquired by Kawartha Conservation staff in the following datums and projection:

Horizontal datum: NAD83 (CSRS)
Vertical datum: CGVD28
Projection: UTM Zone 17N

2.1.1 Checkpoints – Fenelon Falls

Kawartha Conservation field staff captured checkpoints using Real-Time Kinematic Global Navigation Satellite System (RTK GNSS) survey equipment within the project area.

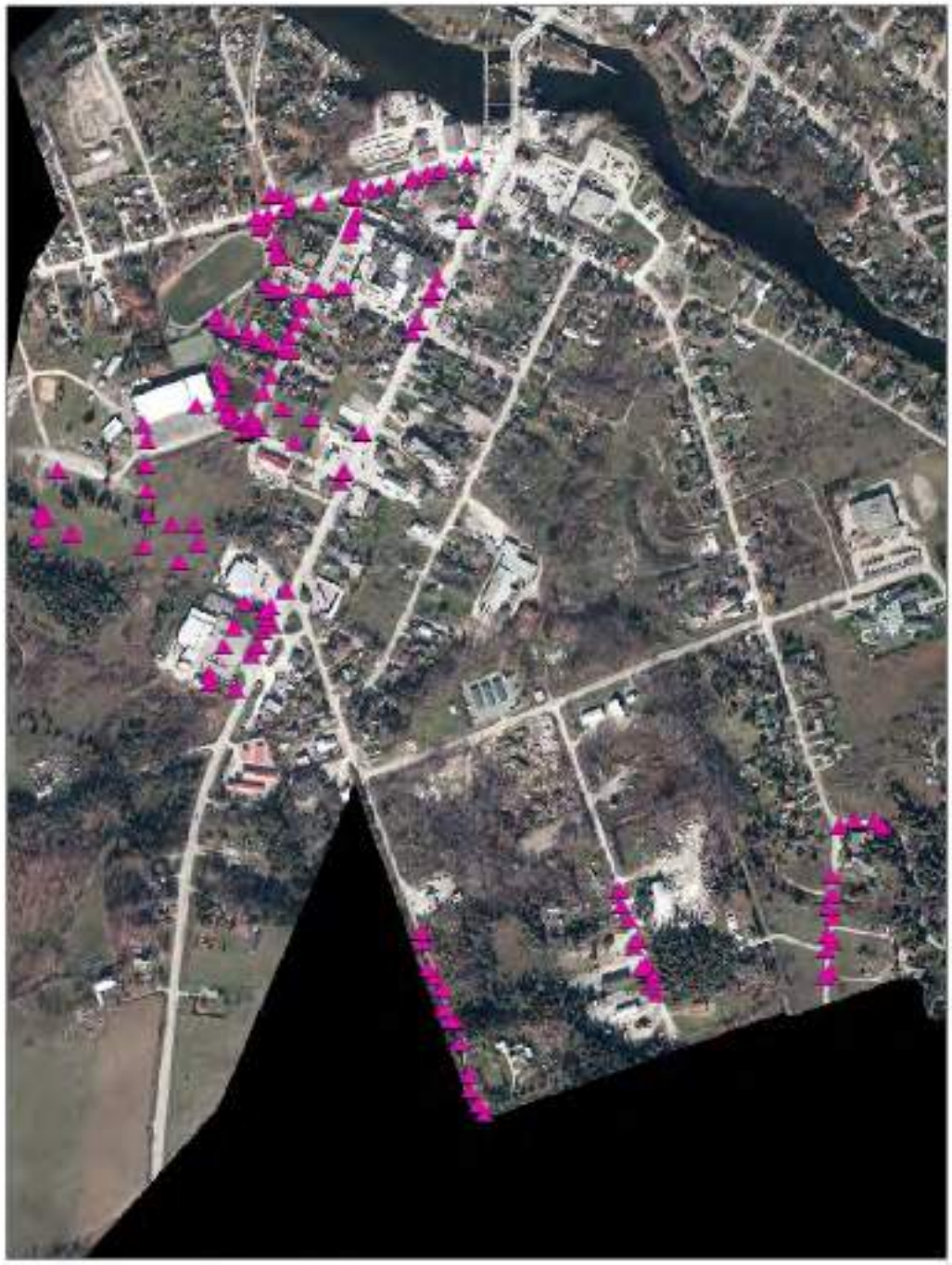

Figure 1 All RTK GNSS survey checkpoints shown over orthoimagery for Fenelon Falls project area

2.1.2 Base DTM – Fenelon Falls

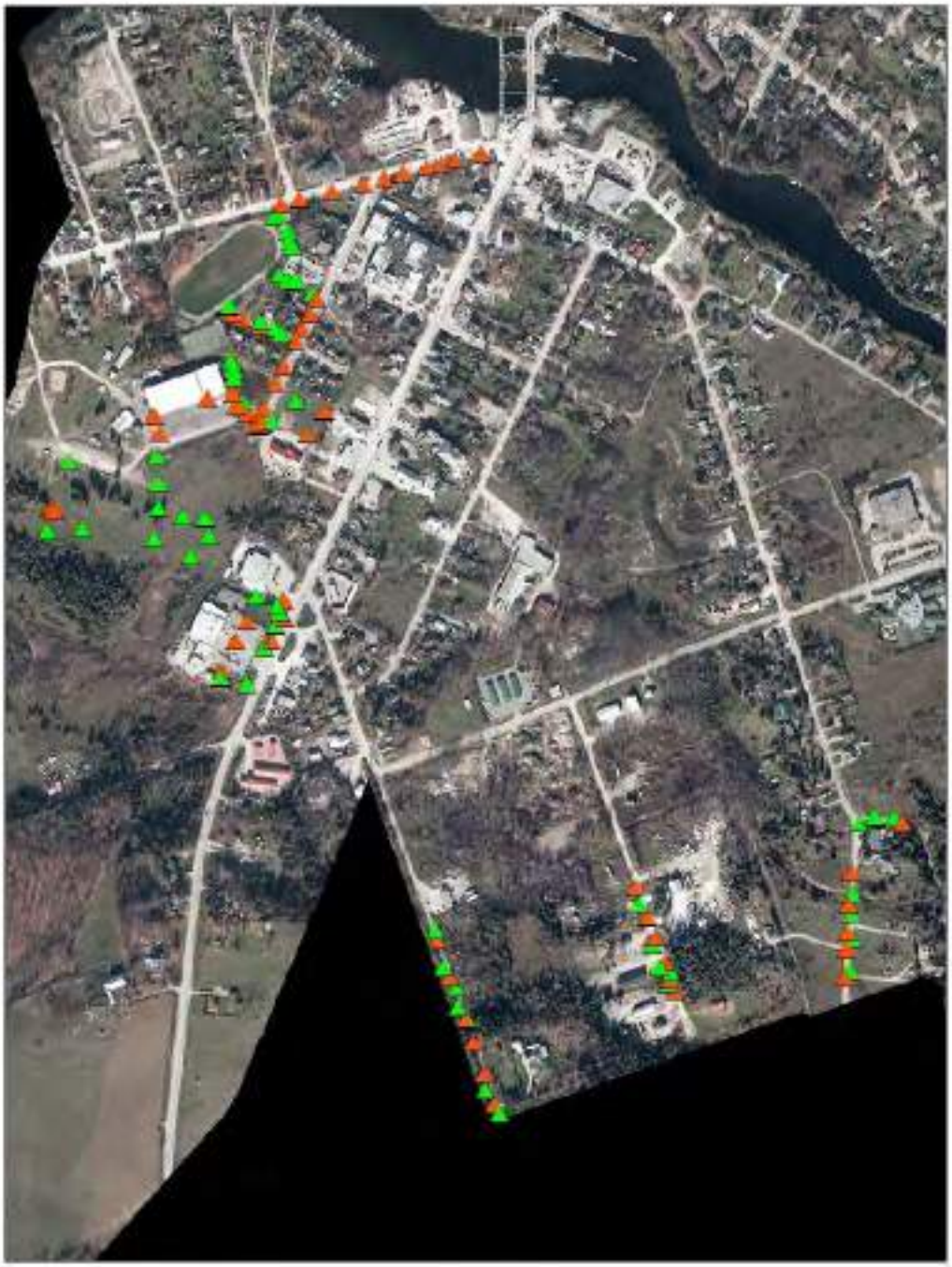

Figure 2 Vertical checkpoints shown over Base DTM for the Fenelon Falls project area (orange = non-vegetated vertical accuracy (NVA), green = vegetated vertical accuracy (VVA)

2.1.3 Orthoimagery – Fenelon Falls

Figure 3 Horizontal checkpoints (yellow) shown over orthoimagery for Fenelon Falls project area

3.0 Results

3.1 Base DTM – Fenelon Falls Accuracy Reporting Statement

This dataset was tested to meet ASPRS Positional Accuracy Standards for Geospatial Data (2014) for a 33.3 (cm) RMSEz Vertical Accuracy Class. Actual NVA accuracy was found to be +/- 15.0 cm at the 95th percentile. Actual VVA accuracy was found to be +/- 24.9 cm at the 95th percentile.

3.2 Orthoimagery – Fenelon Falls Accuracy Reporting Statement

This dataset was tested to meet ASPRS Positional Accuracy Standards for Digital Geospatial Data (2014) for a 30.0 (cm) RMSEx/RMSEy Horizontal Accuracy Class. Actual positional accuracy was found to be RMSEx = 7.8 cm and RMSEy = 15.0 cm which equates to Positional Horizontal Accuracy = +/- 25.4 cm at a 95% confidence level.

Appendix A: Non-vegetated Vertical Accuracy Statistics – Base DTM – Fenelon Falls

	Map-Derived Values	Survey Checkpoint Values	Residuals (Errors)
Point	Elevation (H)	Elevation (H)	Δz Elevation (H)
ID	metres	metres	metres
1	259	258.854	-0.146
2	258.5700073	258.462	-0.10801
3	258.2999878	258.239	-0.06099
4	260.2399902	260.254	0.01401
5	260.4599915	260.311	-0.14899
6	260.1199951	260.058	-0.062
7	264.2999878	264.311	0.011012
8	263.25	263.254	0.004
9	261.8599853	261.764	-0.09599
10	260.0599976	260.037	-0.023
11	258.7200012	258.552	-0.168
12	258.2900085	258.212	-0.07801
13	256.9700012	256.978	0.007999
14	256.980011	257.057	0.076989
15	256.9200134	256.918	-0.00201
16	256.8500061	256.877	0.026994
17	256.7099915	256.746	0.036009
18	256.3699951	256.325	-0.045
19	255.8399963	255.736	-0.104
20	255.9199982	255.8	-0.12
21	255.7299957	255.648	-0.082

22	255.3699951	255.305	-0.065
23	255.6000061	255.515	-0.08501
24	252.8699951	252.793	-0.077
25	256.730011	256.78	0.049989
26	256.4700012	256.507	0.036999
27	255.8899994	256.033	0.143001
28	255.7899933	255.928	0.138007
29	256.0499878	256.091	0.041012
30	256.0700073	256.075	0.004993
31	255.8699951	255.885	0.015005
32	255.949997	255.973	0.023003
33	256.2000122	256.127	-0.07301
34	256.9599915	256.81	-0.14999
35	258.1000061	258.192	0.091994
36	258.0499878	258.096	0.046012
37	257.8599853	257.938	0.078015
38	257.4899902	257.774	0.28401
39	257.5400085	257.595	0.054991
40	256.980011	257.114	0.133989
41	256.4700012	256.48	0.009999
42	256.2999878	256.333	0.033012
43	257.2600098	257.233	-0.02701
44	257.1099853	257.101	-0.00899
45	257.3200073	257.34	0.019993

46	257.3299866	257.313	-0.01699
47	257.6900024	257.69	-2.4E-06
48	257.7099915	257.751	0.041009
49	257.6600037	257.775	0.114996
50	257.7200012	257.695	-0.025
51	257.4100037	257.392	-0.018
52	257.5	257.402	-0.098
53	257.5700073	257.678	0.107993
54	258.4599915	258.489	0.029009
55	258.4100037	258.68	0.269996
56	258.7600098	258.915	0.15499
57	258.2999878	258.432	0.132012
58	258.0400085	258.06	0.019991
59	259.2999878	259.319	0.019012
60	259.2999878	259.332	0.032012
61	259.2900085	259.298	0.007991
62	259.2900085	259.311	0.020991
Number of Checkpoints			**62**
Mean Error (m)			**0.068**
Percentile Rank			**58.95**
Percentile (Qp)			**0.150**

Appendix B: Vegetated Vertical Accuracy Assessment Statistics – Base DTM – Fenelon Falls

	Map-Derived Values	Survey Checkpoint Values	Residuals (Errors)
Point	Elevation (H)	Elevation (H)	Δz Elevation (H)
ID	metres	metres	metres
1	259.3	259.324	0.024012
2	258.84	258.932	0.092004
3	258.69	258.651	-0.039
4	258.31	258.303	-0.007
5	258.62	258.494	-0.126
6	259.81	259.692	-0.118
7	259.23	259.105	-0.12501
8	264.61	264.516	-0.09399
9	263.37	263.318	-0.052
10	259.9	259.857	-0.04299
11	259.38	259.257	-0.123
12	258.77	258.526	-0.24399
13	258.5	258.242	-0.258
14	257.99	257.741	-0.24899
15	256.82	256.8	-0.02001
16	256.81	256.809	-0.001
17	256.7	256.699	-0.00101
18	256.66	256.562	-0.098
19	256.63	256.523	-0.107
20	255.1	254.999	-0.10101
21	255.27	255.282	0.011996

22	255.72	255.592	-0.128
23	255.62	255.475	-0.145
24	256.39	256.272	-0.11801
25	254.47	254.402	-0.068
26	253.14	253.077	-0.063
27	256.62	256.658	0.038005
28	256.74	256.696	-0.04399
29	256.66	256.75	0.089996
30	256.72	256.799	0.078999
31	256.92	256.837	-0.08301
32	256.64	256.654	0.013985
33	256.98	256.958	-0.02201
34	257.57	257.493	-0.07701
35	257.97	257.992	0.021999
36	257.6	257.631	0.030994
37	257.66	257.758	0.097996
38	256.93	256.896	-0.03399
39	256.93	256.755	-0.17499
40	257.32	257.313	-0.00701
41	257.57	257.512	-0.05801
42	256.29	255.982	-0.30801
43	256.46	256.101	-0.35899
44	256.49	256.336	-0.15399
45	256.59	256.461	-0.129

46	256.71	256.734	0.024009
47	257.82	257.789	-0.03101
48	258.17	258.175	0.004987
49	258.48	258.431	-0.04901
50	258.43	258.45	0.020007
51	258.41	258.192	-0.218
52	258.71	258.52	-0.18999
53	258.82	258.774	-0.04601
54	258.93	258.881	-0.04899
55	259	259.025	0.025
56	259.22	259.12	-0.1
57	258.58	258.539	-0.04099
Number of Checkpoints			**57**
Mean Error (m)			**0.089**
Percentile Rank			**54.2**
Percentile (Qp)			**0.249**

Appendix C: Horizontal Accuracy Assessment Statistics – Orthoimagery – Fenelon Falls

	Map-derived values		Survey Check Point Values		Residuals (Errors)	
Point	Easting (E)	Northing (N)	Easting (E)	Northing (N)	Δx Easting (E)	Δy Northing (N)
ID	metres	metres	metres	metres	metres	metres
1	672651.6253	4919638.617	672651.491	4919638.631	-0.13425	0.01389
2	672646.9031	4919641.324	672646.885	4919641.382	-0.01813	0.05829
3	672643.8719	4919649.719	672643.86	4919649.586	-0.01189	-0.13296
4	672581.0926	4919796.634	672581.174	4919796.793	0.081424	0.15897
5	672589.5638	4919779.257	672589.723	4919779.171	0.159224	-0.08588
6	672593.9283	4919764.956	672594.01	4919765.037	0.081654	0.08054
7	672629.3512	4919686.861	672629.341	4919686.89	-0.01023	0.02926
8	672645.3421	4919640.503	672645.299	4919640.54	-0.04308	0.0365
9	672655.0748	4919625.964	672655.206	4919626.198	0.131234	0.23395
10	672674.2467	4919515.368	672674.358	4919515.501	0.111295	0.13317
11	672663.6745	4919553.909	672663.731	4919554.143	0.056519	0.23413
12	672653.94	4919588.49	672653.957	4919588.587	0.017043	0.09738
13	672637.8088	4919618.527	672637.77	4919618.624	-0.03883	0.09669
14	672638.7561	4919619.625	672638.734	4919619.754	-0.02209	0.12873
15	672531.2039	4919580.159	672531.266	4919580.074	0.062143	-0.08483
16	672524.4705	4919577.131	672524.574	4919577.169	0.103535	0.03794
17	672519.3638	4919588.807	672519.267	4919588.917	-0.09675	0.10989
18	672538.1879	4919597.585	672538.163	4919597.582	-0.02491	-0.00273
19	672562.2706	4919605.379	672562.316	4919605.499	0.045353	0.12004
20	672631.1105	4919632.081	672631.114	4919632.302	0.003521	0.22117
Number of checkpoints					**20**	**20**
Mean Error (m)					**0.063**	**0.105**

Standard Deviation (m)				**0.076**	**0.102**
RMSE (m)				**0.078**	**0.124**
RMSEr (m)					**0.147**
NSSDA Horizontal Accuracyr (ACCr) at 95% Confidence Level (m)					**0.254**

Digital Elevation and Orthoimagery Data Quality Control

It is important that the accuracy of the digital elevation models (DEM) and orthoimagery datasets be tested in order to understand the confidence that can be placed on the hydraulic model and flood maps.

A LiDAR and orthoimagery full-suite remote sensing data delivery was acquired by the City of Kawartha Lakes in 2012. The acquisition included orthophotos, LiDAR-derived point cloud data, elevation raster tiles, and other geospatial/non-geospatial datasets produced by the vendor. At the time of the acquisition, the *2009 Ontario Imagery and Elevation Guidelines* (herein referred to as the *2009 Ontario Guidelines*) was the technical document that set geospatial data acquisition specifications in Ontario and defined geospatial data accuracy targets based on levels or risk.

In 2014, the American Society of Photogrammetry and Remote Sensing (ASPRS) published updated standards for quantifying, testing, and reporting accuracy of geospatial data, titled "*ASPRS Positional Accuracy Standards for Digital Geospatial Data (2014)"* (herein referred to as the *2014 ASPRS Standards*). The 2014 ASPRS Standards provides a more up-to-date and robust way of measuring and communicating the accuracy of geospatial data for the purposes of quality control (QC).

In summary, the original project data accuracy requirements established using the 2009 Ontario Guidelines will be fully maintained with only reporting statistics following the 2014 ASPRS Standards format.

Steps to carry out Quality Control:

1. At the initiation of each project the project engineer and the remote sensing (RS) technician will direct the KRCA survey team where to collect QC survey control points for testing accuracy of both digital elevation and orthoimagery data to be used to produce flood plain maps.

2. At the completion of the survey, the survey team will provide the project engineer and the RS technician with the QC survey data. The engineer and RS technician will review the survey data collected for survey completeness. If required, they will direct the KRCA survey team where additional survey is needed for the QC check.

3. Once all survey data has been collected, the RS technician will complete the QC analysis. The result of the analysis will be provided to the project engineer in the QC report.

Vertical Accuracy Goal – Elevation Data

The 2009 Ontario Guidelines states the minimum vertical geospatial data accuracy to be used for the risk level defined as "…densely to moderately populated urban areas

that may or may not fall within the Regulated Flood Line" shall be mapped to an accuracy of +/- 0.25 m Linear Map Accuracy Standard (LMAS). This LMAS minimum accuracy level converts to +/- 0.30 m at the 95% confidence level, in accordance with the 2014 ASPRS Standards. This implies that 38 of 40 checkpoints must be within +/- 0.30 m of their true elevation.

Vertical Accuracy Checking - Elevation Data

In accordance with the 2014 ASPRS Standards, a minimum of 70 checkpoints (survey points) will need to be collected using RTK GNSS survey equipment for each project area. To confirm optimal equipment performance in the field, a Precise Point Positioning (PPP) monument should be established at KRCA Main Office to allow for easy equipment performance checks as survey crews enter the field and return to the office.
The terrain from which the checkpoints are acquired should be either flat or, if sloped, be of uniform slope not exceeding 20%. The checkpoints should consist of:

- A minimum of 40 checkpoints for non-vegetated terrain
- A minimum of 30 checkpoints for vegetated terrain

"Non-vegetated" is defined by the 2014 ASPRS Standards as being open terrain (bare soil, sand, rocks, and short grass) and elevation errors can be assumed to follow a normal distribution. Accuracy statistics can be represented as Non-vegetated Vertical Accuracy (NVA) at a 95% confidence interval.

"Vegetated" is defined by the 2014 ASPRS Standards as being non-open terrain (tall weeds and crops, brush lands, and fully forested areas). The vertical error in vegetated areas cannot be assumed to follow a normal distribution. Therefore, accuracy statistics must be reported as Vegetated Vertical Accuracy (VVA) at the 95th percentile of the absolute value of vertical errors.

Horizontal Accuracy Goal - Orthoimagery

The 2009 Ontario Guidelines states the minimum horizontal geospatial data accuracy to be used for the risk level defined as "…densely to moderately populated urban areas that may or may not fall within the Regulated Flood Line" shall be mapped to an accuracy of +/- 0.25 m Circular Map Accuracy Standard (CMAS). This CMAS minimum accuracy level converts to +/- 0.29 m at the 95% confidence level, in accordance with the 2014 ASPRS Standards. This implies that 38 of 40 checkpoints must be within +/- 0.29 m of their true elevation.

Horizontal Accuracy Checking - Orthoimagery

A minimum of 20 checkpoints will need to be collected using RTK GNSS survey equipment for each project area.
The checkpoints should be of clearly defined, readily identifiable features within each project area that are not elevated with respect to the surrounding terrain. The checkpoints should consist of:

- A minimum of 20 checkpoints for photo-identifiable objects, randomly distributed

Q/C Report

The report should include:

- Detailed list of test datasets used for quality control analysis
- Confirmation that datums and projections are consistent across all tested datasets
- Table comparing the field surveyed spot elevations with DEM spot elevations
- Table comparing the field surveyed photo-identifiable objects with orthoimagery test points
- Orthomap with labelled survey locations for all checkpoints used in the QC analysis
- Vertical Accuracy Reporting Statement consistent with the 2014 ASPRS Standards
- Horizontal Accuracy Reporting Statement consistent with the 2014 ASPRS Standards

The ASPRS Vertical Accuracy Reporting Statement should follow the 2014 ASPRS Standards format:

"This data was tested to meet ASPRS Positional Accuracy Standards for Digital Geospatial Data (2014) for an ***X*** cm RMSEz Vertical Accuracy Class. Actual NVA accuracy was found to be RMSEz = ***X*** cm, equating to +/- ***X*** cm at 95% confidence level. Actual VVA accuracy was found to be +/- ***X*** cm at the 95th percentile."

The Horizontal Accuracy Reporting Statement should follow the 2014 ASPRS Standards format:

"This data set was tested to meet ASPRS Positional Accuracy Standards for Digital Geospatial Data (2014) for a X cm RMSEx/RMSEy Horizontal Accuracy Class. Actual positional accuracy was found to be RMSEx = ***X*** cm and RMSEy = ***X*** cm which equates to Positional Horizontal Accuracy = +/- ***X*** cm at a 95% confidence level."

References

American Society for Photogrammetry and Remote Sensing (ASPRS), 2014. *ASPRS Positional Accuracy Standards for Digital Geospatial Data, Edition 1, Version 1.0.*

Government of Ontario, 2009. *Imagery And Elevation Acquisition Guidelines, Version 1.2, Queen's Printer of Ontario.* Prepared by Mapcon Mapping Ltd.